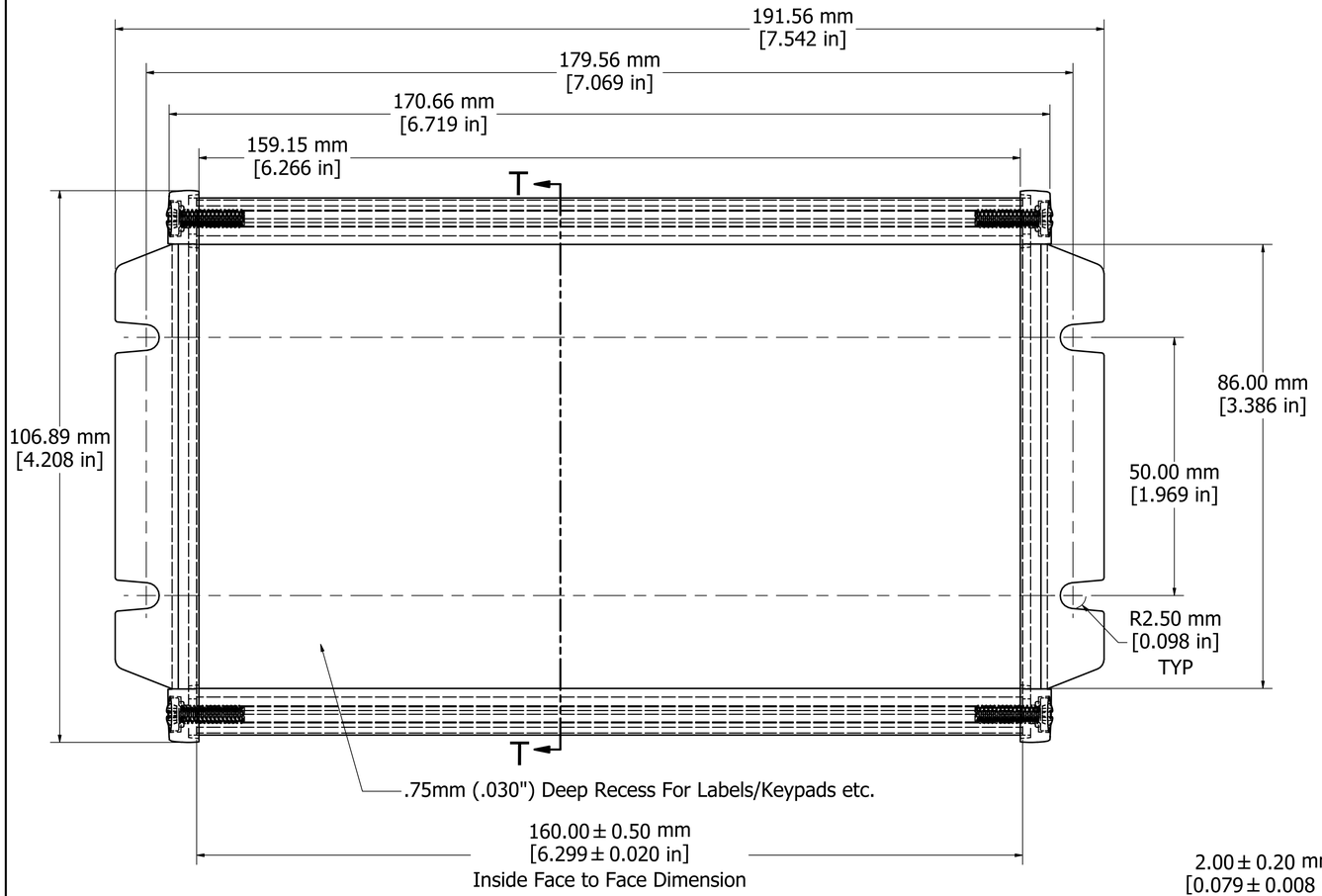

ASSEMBLY - VIEW FROM TOP

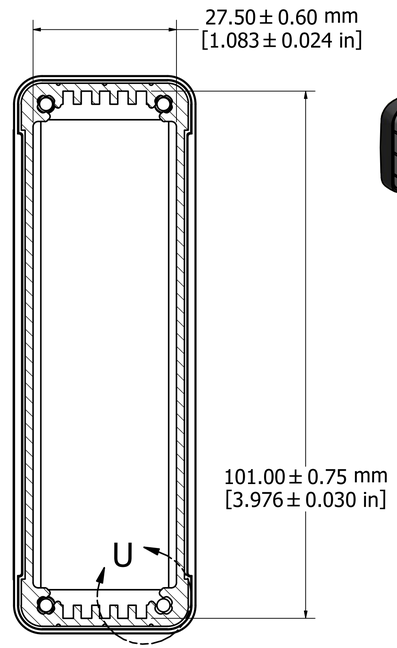

SECTION T-T

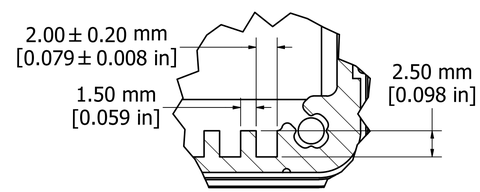

DETAIL U

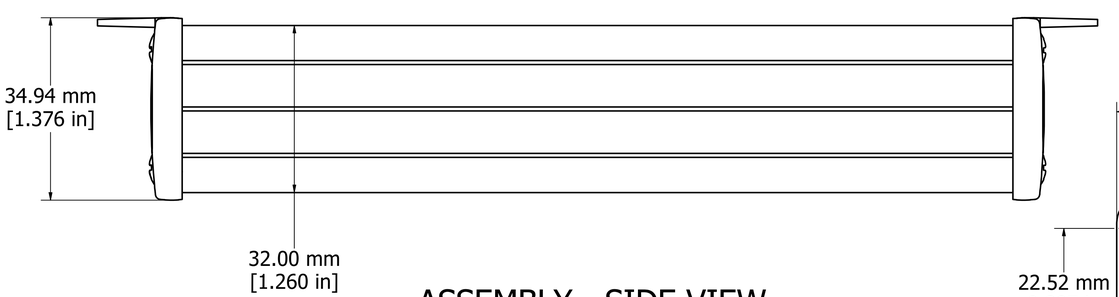

ASSEMBLY - SIDE VIEW

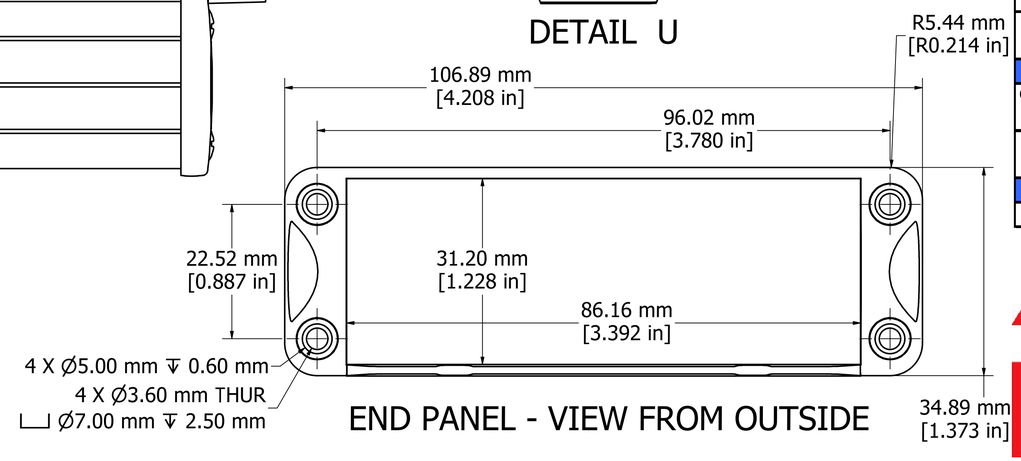

END PANEL - VIEW FROM OUTSIDE

Fits 160mm (6.299") X 100mm (3.937") PCB

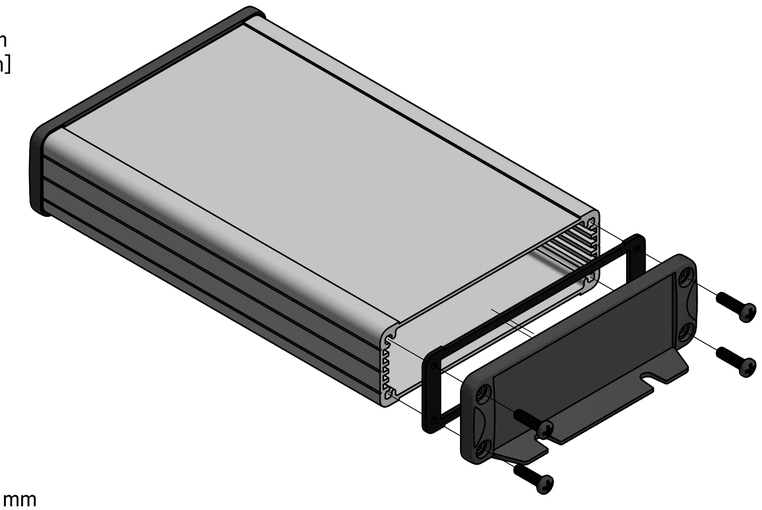

PROTECTION TO IP 65

Enclosures can be Factory Modified (Milling, Drilling, Printing etc.)
Contact Factory mjm@hammondmfg.com for quotes
Solid models of this enclosure available in STEP or IGES.

NOTE	
Purchased assembly includes box, end panels, #6 Taptight screws w/ O-Rings, self adhesive rubber feet, and gaskets.	
Box made from Extruded Aluminum 6063.	
End panels made from ADC-12 Diecast Aluminum with a black powder paint finish.	
WATERPROOF 1457L1602	
PART NUMBERS	
Clear anodized box with black powder painted end panels	1457L1602
Black powder painted box and end panels	1457L1602BK
EMI/RFI SHIELDED (IP 54)	
Clear anodized box with black powder painted end panels	1457L1602E
Black powder painted box and end panels	1457L1602EBK
ACCESSORIES	
See website for accessories.	

HAMMOND MANUFACTURING™

1457L1602

www.hammondmfg.com

Downloaded from Arrow.com.