24-Stage Frequency Divider

MC14521B

The MC14521B consists of a chain of 24 flip-flops with an input circuit that allows three modes of operation. The input will function as a crystal oscillator, an RC oscillator, or as an input buffer for an external oscillator. Each flip-flop divides the frequency of the previous flip-flop by two, consequently this part will count up to $2^{24} = 16{,}777{,}216$. The count advances on the negative going edge of the clock. The outputs of the last seven-stages are available for added flexibility.

Features

- All Stages are Resettable
- Reset Disables the RC Oscillator for Low Standby Power Drain
- RC and Crystal Oscillator Outputs Are Capable of Driving External Loads
- Test Mode to Reduce Test Time
- V_{DD}′ and V_{SS}′ Pins Brought Out on Crystal Oscillator Inverter to Allow the Connection of External Resistors for Low-Power Operation
- Supply Voltage Range = 3.0 Vdc to 18 Vdc
- Capable of Driving Two Low-Power TTL Loads or One Low-Power Schottky TTL Load over the Rated Temperature Range
- NLV Prefix for Automotive and Other Applications Requiring Unique Site and Control Change Requirements; AEC-Q100 Qualified and PPAP Capable
- This Device is Pb-Free and is RoHS Compliant

MAXIMUM RATINGS (Voltages Referenced to V_{SS})

Parameter	Symbol	Value	Unit
DC Supply Voltage Range	V_{DD}	−0.5 to +18.0	V
Input or Output Voltage Range (DC or Transient)	V_{in}, V_{out}	−0.5 to V_{DD} +0.5	V
Input or Output Current (DC or Transient) per Pin	I_{in}, I_{out}	±10	mA
Power Dissipation, per Package (Note 1)	P_D	500	mW
Ambient Temperature Range	T_A	−55 to +125	°C
Storage Temperature Range	T_{stg}	−65 to +150	°C
Lead Temperature (8-Second Soldering)	T_L	260	°C

Stresses exceeding those listed in the Maximum Ratings table may damage the device. If any of these limits are exceeded, device functionality should not be assumed, damage may occur and reliability may be affected. Operating the device outside its recommended conditions, but still within its maximum rated limits may not cause immediate damage. However, doing so can lead to reduced performance, unpredictable behavior, and potentially shorten the device's lifespan or reliability.

1. Temperature Derating: "D/DW" Package: –7.0 mW/°C From 65 °C To 125 °C

This device contains protection circuitry to guard against damage due to high static voltages or electric fields. However, precautions must be taken to avoid applications of any voltage higher than maximum rated voltages to this high-impedance circuit. For proper operation, V_{in} and V_{out} should be constrained to the range $V_{SS} \le (V_{in}$ or $V_{out}) \le V_{DD}$.

Unused inputs must always be tied to an appropriate logic voltage level (e.g., either V_{SS} or V_{DD}). Unused outputs must be left open.

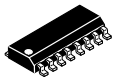

1

SOIC-16
D SUFFIX
CASE 751B

PIN ASSIGNMENT

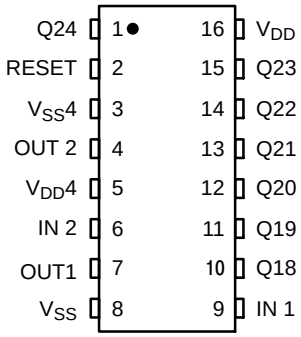

MARKING DIAGRAMS



A = Assembly Location
WL, L = Wafer Lot
YY, Y = Year
WW, W = Work Week
G = Pb-Free Package

ORDERING INFORMATION

See detailed ordering and shipping information in the package dimensions section on page 2 of this data sheet.

NOTE: Some of the devices on this data sheet have been **DISCONTINUED**. Please refer to the table on page 2.

© Semiconductor Components Industries, LLC, 2014

Downloaded from Arrow.com.

BLOCK DIAGRAM

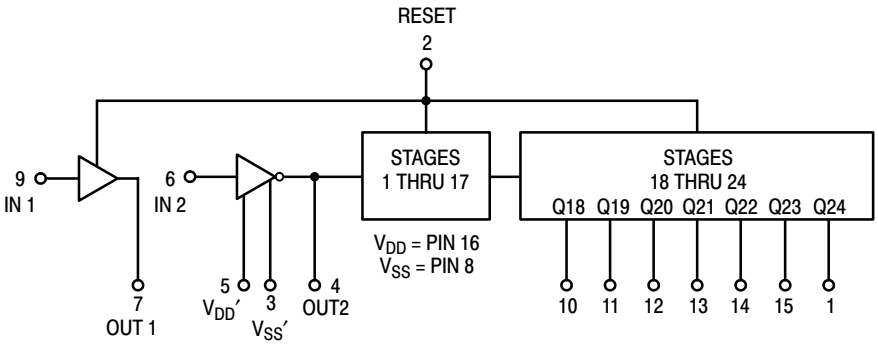

Output	Count Capacity
Q18	2^{18} = 262,144
Q19	2^{19} = 524,288
Q20	2^{20} = 1,048,576
Q21	2^{21} = 2,097,152
Q22	2^{22} = 4,194,304
Q23	2^{23} = 8,388,608
Q24	2^{24} = 16,777,216

ORDERING INFORMATION

Device	Package	Shipping†
MC14521BDG	SOIC-16 (Pb-Free)	48 Units / Rail
MC14521BDR2G	SOIC-16 (Pb-Free)	2500 / Tape & Reel
NLV14521BDR2G*	SOIC-16 (Pb-Free)	2500 / Tape & Reel

DISCONTINUED (Note 2)

NLV14521BDG*	SOIC-16 (Pb-Free)	48 Units / Rail

† For information on tape and reel specifications, including part orientation and tape sizes, please refer to our Tape and Reel Packaging Specifications Brochure, BRD8011/D.

* NLV Prefix for Automotive and Other Applications Requiring Unique Site and Control Change Requirements; AEC-Q100 Qualified and PPAP Capable.

2. **DISCONTINUED:** These devices are not recommended for new design. Please contact your **onsemi** representative for information. The most current information on these devices may be available on www.onsemi.com.

Share Feedback
Your Opinion Matters

Downloaded from Arrow.com.

ELECTRICAL CHARACTERISTICS (Voltages Referenced to V_{SS})

Characteristic	Symbol	V_{DD} Vdc	−55 °C Min	−55 °C Max	25 °C Min	25 °C Typ (Note 3)	25 °C Max	125 °C Min	125 °C Max	Unit
Output Voltage “0” Level V_{in} = V_{DD} or 0	V_{OL}	5.0 10 15	– – –	0.05 0.05 0.05	– – –	0 0 0	0.05 0.05 0.05	– – –	0.05 0.05 0.05	Vdc
“1” Level V_{in} = 0 or V_{DD}	V_{OH}	5.0 10 15	4.95 9.95 14.95	– – –	4.95 9.95 14.95	5.0 10 15	– – –	4.95 9.95 14.95	– – –	Vdc
Input Voltage “0” Level (V_O = 4.5 or 0.5 Vdc) (V_O = 9.0 or 1.0 Vdc) (V_O = 13.5 or 1.5 Vdc)	V_{IL}	5.0 10 15	– – –	1.5 3.0 4.0	– – –	2.25 4.50 6.75	1.5 3.0 4.0	– – –	1.5 3.0 4.0	Vdc
“1” Level (V_O = 0.5 or 4.5 Vdc) (V_O = 1.0 or 9.0 Vdc) (V_O = 1.5 or 13.5 Vdc)	V_{IH}	5.0 10 15	3.5 7.0 11	– – –	3.5 7.0 11	2.75 5.50 8.25	– – –	3.5 7.0 11	– – –	Vdc
Output Drive Current (V_{OH} = 4.5 Vdc) Source (V_{OH} = 9.0 Vdc) Pin 4 (V_{OH} = 13 Vdc)	I_{OH}	5.0 10 15	–0.25 –0.62 –1.8	– – –	–0.2 –0.5 –1.5	–0.36 –0.9 –3.5	– – –	–0.14 –0.35 –1.1	– – –	mAdc
(V_{OH} = 2.5 Vdc) Source (V_{OH} = 4.6 Vdc) Pins 1, 7, 10, (V_{OH} = 9.5 Vdc) 11, 12, 13, 14 (V_{OH} = 13.5 Vdc) and 15	I_{OH}	5.0 5.0 10 15	–3.0 –0.64 –1.6 –4.2	– – – –	–2.4 –0.51 –1.3 –3.4	–4.2 –0.88 –2.25 –8.8	– – – –	–1.7 –0.36 –0.9 –2.4	– – – –	mAdc
(V_{OL} = 0.4 Vdc) Sink (V_{OL} = 0.5 Vdc) (V_{OL} = 1.5 Vdc)	I_{OL}	5.0 10 15	0.64 1.6 4.2	– – –	0.51 1.3 3.4	0.88 2.25 8.8	– – –	0.36 0.9 2.4	– – –	mAdc
Input Current	I_{in}	15	–	±0.1	–	±0.00001	±0.1	–	±1.0	μAdc
Input Capacitance (V_{in} = 0)	C_{in}	–	–	–	–	5.0	7.5	–	–	pF
Quiescent Current (Per Package)	I_{DD}	5.0 10 15	– – –	5.0 10 20	– – –	0.005 0.010 0.015	5.0 10 20	– – –	150 300 600	μAdc
Total Supply Current (Note 4, 5) (Dynamic plus Quiescent, Per Package) (C_L = 50 pF on all outputs, all buffers switching)	I_T	5.0 10 15	I_T = (0.42 μA/kHz) f + I_{DD} I_T = (0.85 μA/kHz) f + I_{DD} I_T = (1.40 μA/kHz) f + I_{DD}							μAdc

Product parametric performance is indicated in the Electrical Characteristics for the listed test conditions, unless otherwise noted. Product performance may not be indicated by the Electrical Characteristics if operated under different conditions.

3. Data labelled “Typ” is not to be used for design purposes but is intended as an indication of the IC’s potential performance.
4. The formulas given are for the typical characteristics only at 25 °C.
5. To calculate total supply current at loads other than 50 pF: $I_T(C_L) = I_T(50\ pF) + (C_L - 50)\ Vfk$ where: I_T is in μA (per package), C_L in pF, $V = (V_{DD} - V_{SS})$ in volts, f in kHz is input frequency, and k = 0.003.

Share Feedback
Your Opinion Matters

Downloaded from Arrow.com.

SWITCHING CHARACTERISTICS (Note 6) (C_L = 50 pF, T_A = 25 °C)

Characteristic	Symbol	V_{DD} Vdc	Min	Typ (Note 7)	Max	Unit
Output Rise and Fall Time (Counter Outputs) t_{TLH}, t_{THL} = (1.5 ns/pF) C_L + 25 ns t_{TLH}, t_{THL} = (0.75 ns/pF) C_L + 12.5 ns t_{TLH}, t_{THL} = (0.55 ns/pF) C_L + 12.5 ns	t_{TLH}, t_{THL}	 5.0 10 15	 – – –	 100 50 40	 200 100 80	ns
Propagation Delay Time Clock to Q18 t_{PHL}, t_{PLH} = (1.7 ns/pF) C_L + 4415 ns t_{PHL}, t_{PLH} = (0.66 ns/pF) C_L + 1667 ns t_{PHL}, t_{PLH} = (0.5 ns/pF) C_L + 1275 ns	t_{PHL}, t_{PLH}	 5.0 10 15	 – – –	 4.5 1.7 1.3	 9.0 3.5 2.7	µs
Clock to Q24 t_{PHL}, t_{PLH} = (1.7 ns/pF) C_L + 5915 ns t_{PHL}, t_{PLH} = (0.66 ns/pF) C_L + 2167 ns t_{PHL}, t_{PLH} = (0.5 ns/pF) C_L + 1675 ns		 5.0 10 15	 – – –	 6.0 2.2 1.7	 12 4.5 3.5	
Propagation Delay Time Reset to Q_n t_{PHL} = (1.7 ns/pF) C_L + 1215 ns t_{PHL} = (0.66 ns/pF) C_L + 467 ns t_{PHL} = (0.5 ns/pF) C_L + 350 ns	t_{PHL}	 5.0 10 15	 – – –	 1300 500 375	 2600 1000 750	ns
Clock Pulse Width	$t_{WH(cl)}$	5.0 10 15	385 150 120	140 55 40	– – –	ns
Clock Pulse Frequency	f_{cl}	5.0 10 15	– – –	3.5 9.0 12	2.0 5.0 6.5	MHz
Clock Rise and Fall Time	t_{TLH}, t_{THL}	5.0 10 15	– – –	– – –	15 5.0 4.0	µs
Reset Pulse Width	$t_{WH(R)}$	5.0 10 15	1400 600 450	700 300 225	– – –	ns
Reset Removal Time	t_{rem}	5.0 10 15	30 0 −40	–200 –160 –110	– – –	ns

6. The formulas given are for the typical characteristics only at 25 °C.
7. Data labelled “Typ” is not to be used for design purposes but is intended as an indication of the IC’s potential performance.

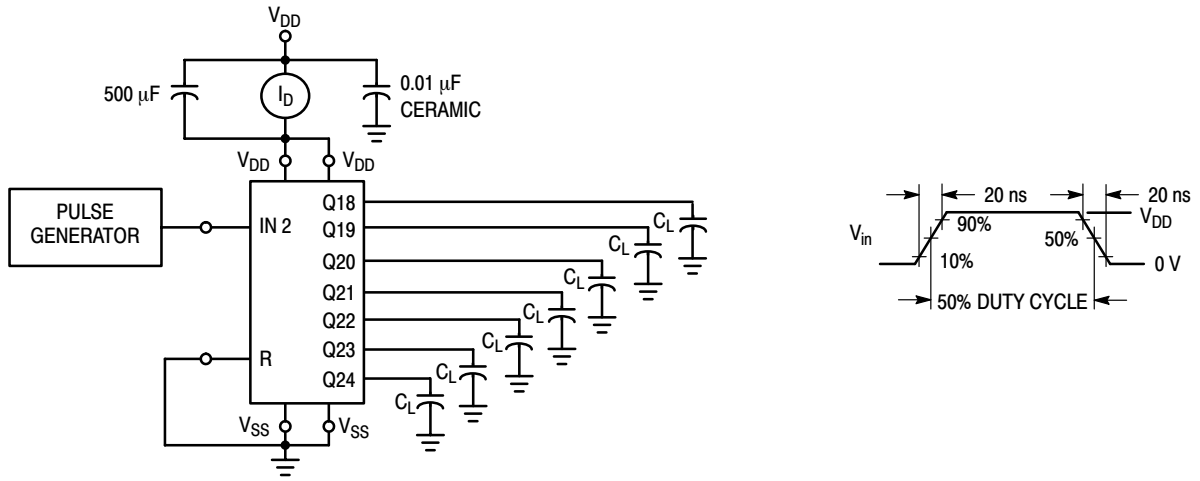

Figure 1. Power Dissipation Test Circuit and Waveform

Share Feedback
Your Opinion Matters

Downloaded from Arrow.com.

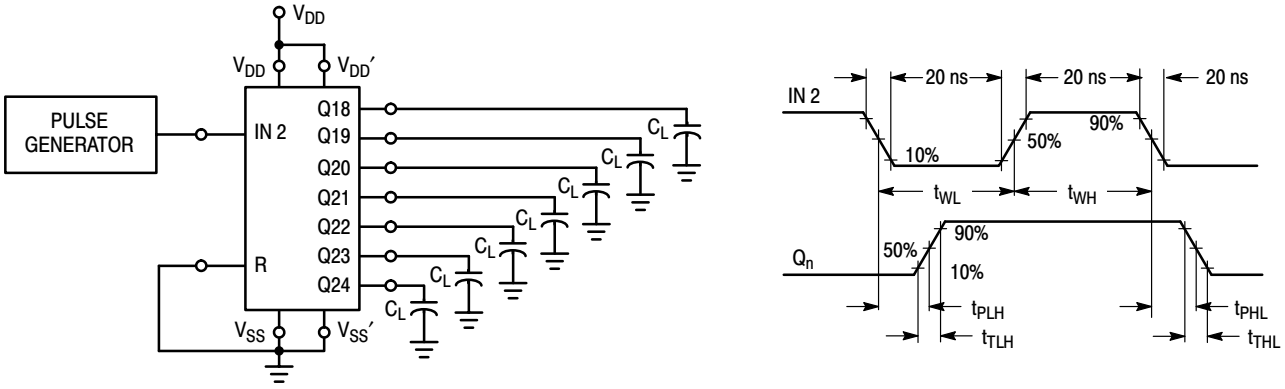

Figure 2. Switching Time Test Circuit and Waveforms

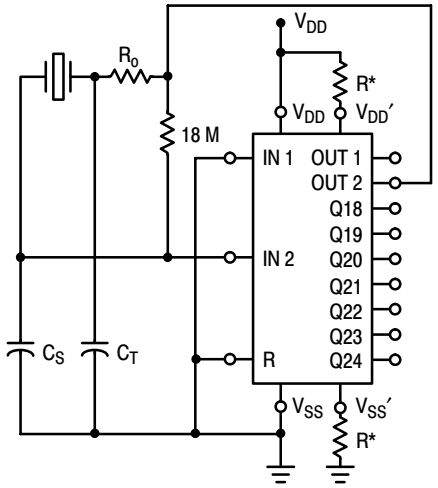

* Optional for low power operation, 10 kΩ ≤ R ≤ 70 kΩ.

Figure 3. Crystal Oscillator Circuit

Characteristic	500 kHz Circuit	50 kHz Circuit	Unit
Crystal Characteristics Resonant Frequency Equivalent Resistance, R_S	 500 1.0	 50 6.2	 kHz kΩ
External Resistor/Capacitor Values R_o C_T C_S	 47 82 20	 750 82 20	 kΩ pF pF
Frequency Stability Frequency Change as a Function of V_{DD} (T_A = 25 °C) V_{DD} Change from 5.0 V to 10 V V_{DD} Change from 10 V to 15 V Frequency Change as a Function of Temperature (V_{DD} = 10 V) T_A Change from −55 °C to + 25 °C MC14521 only Complete Oscillator* T_A Change from + 25 °C to + 125 °C MC14521 only Complete Oscillator*	 + 6.0 + 2.0 − 4.0 + 100 − 2.0 − 160	 + 2.0 + 2.0 − 2.0 + 120 − 2.0 − 560	 ppm ppm ppm ppm ppm ppm

*Complete oscillator includes crystal, capacitors, and resistors.

Figure 4. Typical Data for Crystal Oscillator Circuit

Share Feedback
Your Opinion Matters

Downloaded from Arrow.com.

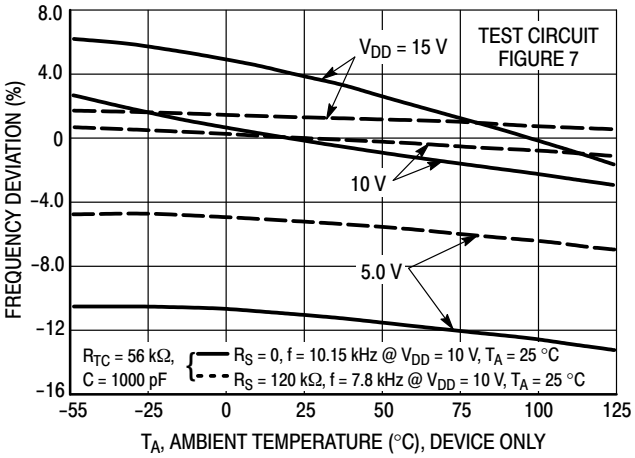

Figure 5. RC Oscillator Stability

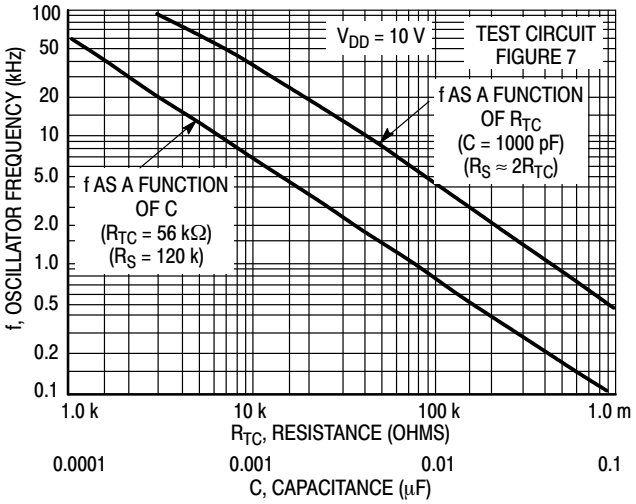

Figure 6. RC Oscillator Frequency as a Function of R_{TC} and C

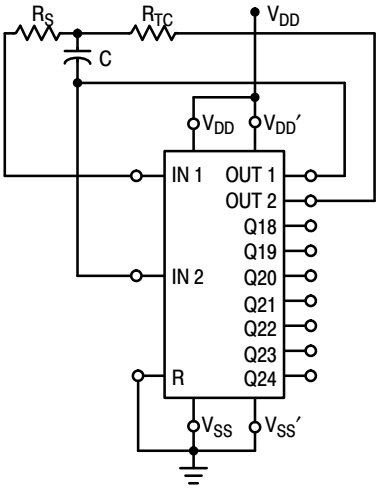

Figure 7. RC Oscillator Circuit

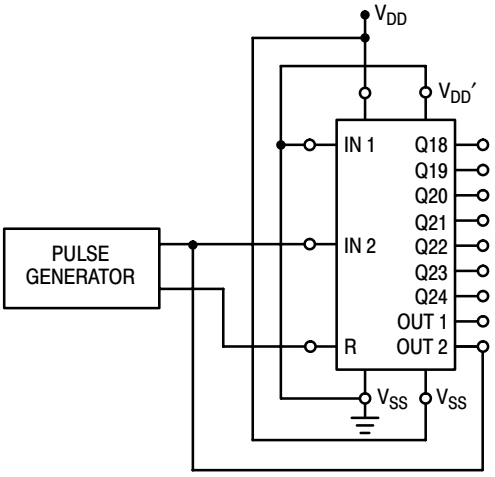

Figure 8. Functional Test Circuit

Share Feedback
Your Opinion Matters

Downloaded from Arrow.com.

FUNCTIONAL TEST SEQUENCE

A test function (see Figure 8) has been included for the reduction of test time required to exercise all 24 counter stages. This test function divides the counter into three 8-stage sections, and 255 counts are loaded in each of the 8-stage sections in parallel. All flip-flops are now at a logic “1”. The counter is now returned to the normal 24-stages in series configuration. One more pulse is entered into Input 2 (In 2) which will cause the counter to ripple from an all “1” state to an all “0” state.

Inputs		Outputs				Comments
Reset	In 2	Out 2	V_{SS}'	V_{DD}'	Q18 thru Q24	Counter is in three 8-stage sections in parallel mode Counter is reset. In 2 and Out 2 are connected together.
1	0	0	V_{DD}	GND	0	
0	1	1	↓	↓		First “0” to “1” transition on In 2, Out 2 node.
	0 1 – – –	0 1 – – –				255 “0” to “1” transitions are clocked into this In 2, Out 2 node.
	1	1			1	The 255th “0” to “1” transition.
	0 0	0 0			1 1	
	1	0	GND	V_{DD}	1	Counter converted back to 24-stages in series mode.
	1	0			1	Out 2 converts back to an output.
	0	1	↓	↓	0	Counter ripples from an all “1” state to an all “0” stage.

Share Feedback
Your Opinion Matters

Downloaded from Arrow.com.

LOGIC DIAGRAM

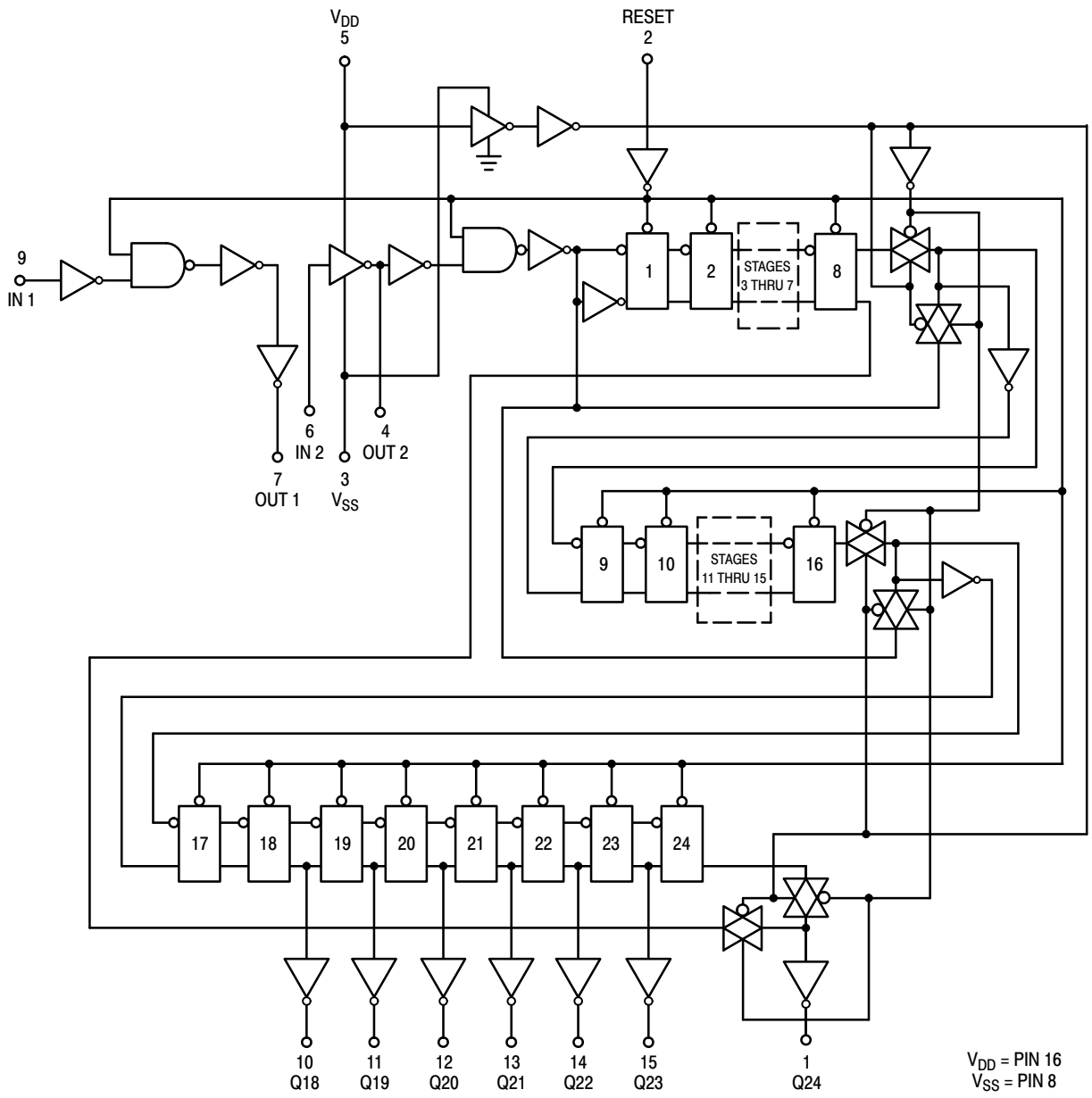

Share Feedback
Your Opinion Matters

Downloaded from Arrow.com.

REVISION HISTORY

Revision	Description of Changes	Date
11	Rebranded the Data Sheet to **onsemi** format. NLV14521BDG OPN marked as Discontinued.	10/3/2025

This document has undergone updates prior to the inclusion of this revision history table. The changes tracked here only reflect updates made on the noted approval dates.

Share Feedback
Your Opinion Matters

Downloaded from Arrow.com.

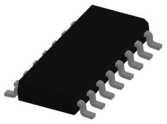

SOIC−16 9.90x3.90x1.37 1.27P
CASE 751B
ISSUE M

DATE 18 OCT 2024

NOTES:
1. DIMENSIONING AND TOLERANCING PER ASME Y14.5M, 2018.
2. DIMENSION IN MILLIMETERS. ANGLE IN DEGREES.
3. DIMENSIONS D AND E1 DO NOT INCLUDE MOLD PROTRUSION.
4. MAXIMUM MOLD PROTRUSION 0.15mm PER SIDE.
5. DIMENSION b DOES NOT INCLUDE DAMBAR PROTRUSION. ALLOWABLE DAMBAR PROTRUSION SHALL BE 0.127mm TOTAL IN EXCESS OF THE b DIMENSION AT MAXIMUM MATERIAL CONDITION.

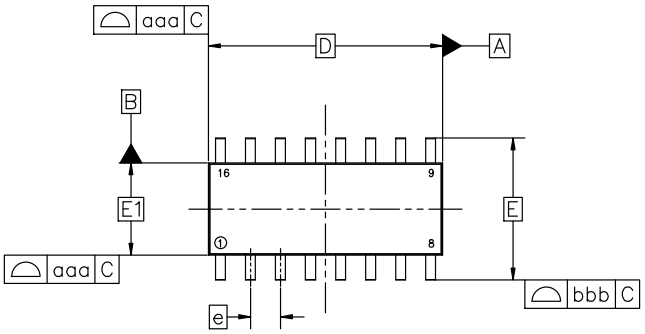

TOP VIEW

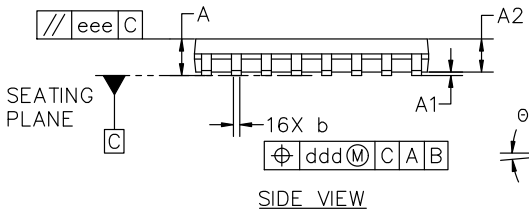

SIDE VIEW

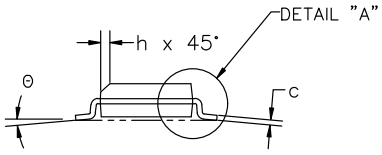

END VIEW

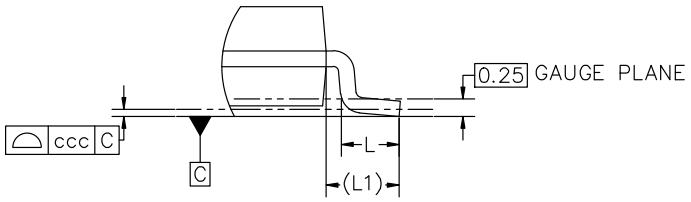

DETAIL "A"
Scale 3:1

MILLIMETERS			
DIM	MIN	NOM	MAX
A	1.35	1.55	1.75
A1	0.10	0.18	0.25
A2	1.25	1.37	1.50
b	0.35	0.42	0.49
c	0.19	0.22	0.25
D	9.90 BSC		
E	6.00 BSC		
E1	3.90 BSC		
e	1.27 BSC		
h	0.25	−−−	0.50
L	0.40	0.83	1.25
L1	1.05 REF		
Θ	0°	−−−	7°
TOLERANCE OF FORM AND POSITION			
aaa	0.10		
bbb	0.20		
ccc	0.10		
ddd	0.25		
eee	0.10		

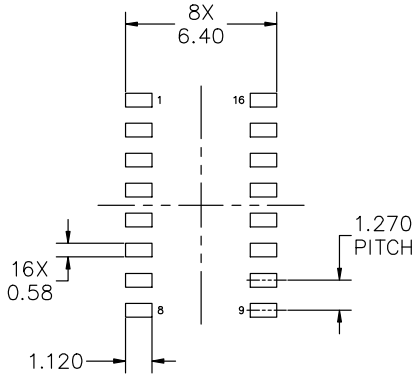

RECOMMENDED MOUNTING FOOTPRINT

*FOR ADDITIONAL INFORMATION ON OUR PB−FREE STRATEGY AND SOLDERING DETAILS, PLEASE DOWNLOAD THE onsemi SOLDERING AND MOUNTING TECHNIQUES REFERENCE MANUAL, SOLDERRM/D

DOCUMENT NUMBER:	**98ASB42566B**	Electronic versions are uncontrolled except when accessed directly from the Document Repository. Printed versions are uncontrolled except when stamped "CONTROLLED COPY" in red.	
DESCRIPTION:	**SOIC−16 9.90X3.90X1.37 1.27P**		**PAGE 1 OF 2**

onsemi and onsemi are trademarks of Semiconductor Components Industries, LLC dba **onsemi** or its subsidiaries in the United States and/or other countries. **onsemi** reserves the right to make changes without further notice to any products herein. **onsemi** makes no warranty, representation or guarantee regarding the suitability of its products for any particular purpose, nor does **onsemi** assume any liability arising out of the application or use of any product or circuit, and specifically disclaims any and all liability, including without limitation special, consequential or incidental damages. **onsemi** does not convey any license under its patent rights nor the rights of others.

© Semiconductor Components Industries, LLC, 2019

Downloaded from Arrow.com.

SOIC−16 9.90x3.90x1.37 1.27P
CASE 751B
ISSUE M

DATE 18 OCT 2024

GENERIC MARKING DIAGRAM*

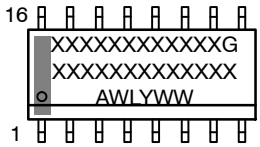

XXXXX = Specific Device Code
A = Assembly Location
WL = Wafer Lot
Y = Year
WW = Work Week
G = Pb−Free Package

*This information is generic. Please refer to device data sheet for actual part marking. Pb−Free indicator, “G” or microdot “▪”, may or may not be present. Some products may not follow the Generic Marking.

STYLE 1:

PIN 1.	COLLECTOR
2.	BASE
3.	EMITTER
4.	NO CONNECTION
5.	EMITTER
6.	BASE
7.	COLLECTOR
8.	COLLECTOR
9.	BASE
10.	EMITTER
11.	NO CONNECTION
12.	EMITTER
13.	BASE
14.	COLLECTOR
15.	EMITTER
16.	COLLECTOR

STYLE 2:

PIN 1.	CATHODE
2.	ANODE
3.	NO CONNECTION
4.	CATHODE
5.	CATHODE
6.	NO CONNECTION
7.	ANODE
8.	CATHODE
9.	CATHODE
10.	ANODE
11.	NO CONNECTION
12.	CATHODE
13.	CATHODE
14.	NO CONNECTION
15.	ANODE
16.	CATHODE

STYLE 3:

PIN 1.	COLLECTOR, DYE #1
2.	BASE, #1
3.	EMITTER, #1
4.	COLLECTOR, #1
5.	COLLECTOR, #2
6.	BASE, #2
7.	EMITTER, #2
8.	COLLECTOR, #2
9.	COLLECTOR, #3
10.	BASE, #3
11.	EMITTER, #3
12.	COLLECTOR, #3
13.	COLLECTOR, #4
14.	BASE, #4
15.	EMITTER, #4
16.	COLLECTOR, #4

STYLE 4:

PIN 1.	COLLECTOR, DYE #1
2.	COLLECTOR, #1
3.	COLLECTOR, #2
4.	COLLECTOR, #2
5.	COLLECTOR, #3
6.	COLLECTOR, #3
7.	COLLECTOR, #4
8.	COLLECTOR, #4
9.	BASE, #4
10.	EMITTER, #4
11.	BASE, #3
12.	EMITTER, #3
13.	BASE, #2
14.	EMITTER, #2
15.	BASE, #1
16.	EMITTER, #1

STYLE 5:

PIN 1.	DRAIN, DYE #1
2.	DRAIN, #1
3.	DRAIN, #2
4.	DRAIN, #2
5.	DRAIN, #3
6.	DRAIN, #3
7.	DRAIN, #4
8.	DRAIN, #4
9.	GATE, #4
10.	SOURCE, #4
11.	GATE, #3
12.	SOURCE, #3
13.	GATE, #2
14.	SOURCE, #2
15.	GATE, #1
16.	SOURCE, #1

STYLE 6:

PIN 1.	CATHODE
2.	CATHODE
3.	CATHODE
4.	CATHODE
5.	CATHODE
6.	CATHODE
7.	CATHODE
8.	CATHODE
9.	ANODE
10.	ANODE
11.	ANODE
12.	ANODE
13.	ANODE
14.	ANODE
15.	ANODE
16.	ANODE

STYLE 7:

PIN 1.	SOURCE N-CH
2.	COMMON DRAIN (OUTPUT)
3.	COMMON DRAIN (OUTPUT)
4.	GATE P-CH
5.	COMMON DRAIN (OUTPUT)
6.	COMMON DRAIN (OUTPUT)
7.	COMMON DRAIN (OUTPUT)
8.	SOURCE P-CH
9.	SOURCE P-CH
10.	COMMON DRAIN (OUTPUT)
11.	COMMON DRAIN (OUTPUT)
12.	COMMON DRAIN (OUTPUT)
13.	GATE N-CH
14.	COMMON DRAIN (OUTPUT)
15.	COMMON DRAIN (OUTPUT)
16.	SOURCE N-CH

onsemi and ONSEMI are trademarks of Semiconductor Components Industries, LLC dba **onsemi** or its subsidiaries in the United States and/or other countries. **onsemi** reserves the right to make changes without further notice to any products herein. **onsemi** makes no warranty, representation or guarantee regarding the suitability of its products for any particular purpose, nor does **onsemi** assume any liability arising out of the application or use of any product or circuit, and specifically disclaims any and all liability, including without limitation special, consequential or incidental damages. **onsemi** does not convey any license under its patent rights nor the rights of others.

© Semiconductor Components Industries, LLC, 2019

Downloaded from Arrow.com.

onsemi, ONSEMI , and other names, marks, and brands are registered and/or common law trademarks of Semiconductor Components Industries, LLC dba "**onsemi**" or its affiliates and/or subsidiaries in the United States and/or other countries. **onsemi** owns the rights to a number of patents, trademarks, copyrights, trade secrets, and other intellectual property. A listing of **onsemi**'s product/patent coverage may be accessed at www.onsemi.com/site/pdf/Patent−Marking.pdf. **onsemi** reserves the right to make changes at any time to any products or information herein, without notice. The information herein is provided "as−is" and **onsemi** makes no warranty, representation or guarantee regarding the accuracy of the information, product features, availability, functionality, or suitability of its products for any particular purpose, nor does **onsemi** assume any liability arising out of the application or use of any product or circuit, and specifically disclaims any and all liability, including without limitation special, consequential or incidental damages. Buyer is responsible for its products and applications using **onsemi** products, including compliance with all laws, regulations and safety requirements or standards, regardless of any support or applications information provided by **onsemi**. "Typical" parameters which may be provided in **onsemi** data sheets and/or specifications can and do vary in different applications and actual performance may vary over time. All operating parameters, including "Typicals" must be validated for each customer application by customer's technical experts. **onsemi** does not convey any license under any of its intellectual property rights nor the rights of others. **onsemi** products are not designed, intended, or authorized for use as a critical component in life support systems or any FDA Class 3 medical devices or medical devices with a same or similar classification in a foreign jurisdiction or any devices intended for implantation in the human body. Should Buyer purchase or use **onsemi** products for any such unintended or unauthorized application, Buyer shall indemnify and hold **onsemi** and its officers, employees, subsidiaries, affiliates, and distributors harmless against all claims, costs, damages, and expenses, and reasonable attorney fees arising out of, directly or indirectly, any claim of personal injury or death associated with such unintended or unauthorized use, even if such claim alleges that **onsemi** was negligent regarding the design or manufacture of the part. **onsemi** is an Equal Opportunity/Affirmative Action Employer. This literature is subject to all applicable copyright laws and is not for resale in any manner.

ADDITIONAL INFORMATION

TECHNICAL PUBLICATIONS:
Technical Library: www.onsemi.com/design/resources/technical−documentation
onsemi Website: www.onsemi.com

ONLINE SUPPORT: www.onsemi.com/support
For additional information, please contact your local Sales Representative at www.onsemi.com/support/sales

◊

Downloaded from Arrow.com.