REV.	DESCRIPTION	DATE	DESIGNED
△			

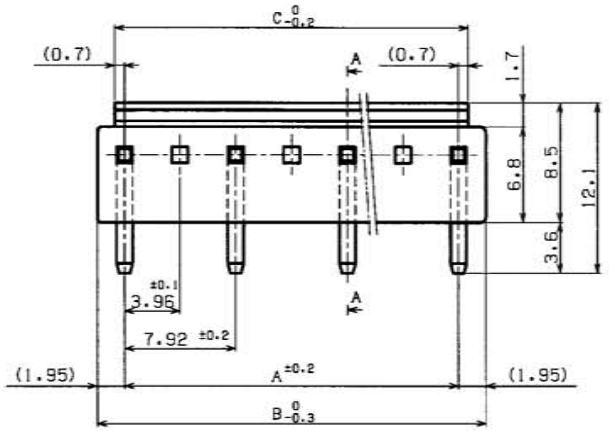

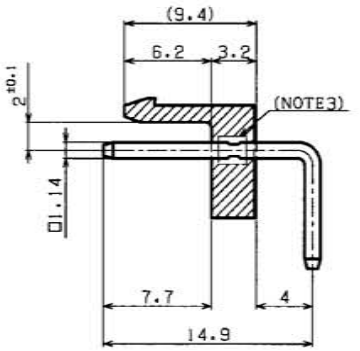

A-A sec.

NOTE

1. Unless otherwise specified, tolerances are ±0.3.
2. The deviation at the top of post shall be ±0.15.
3. Post side with holding constraction for housing.
4. Tolerance of hole pitch on PCB are not cumulative.

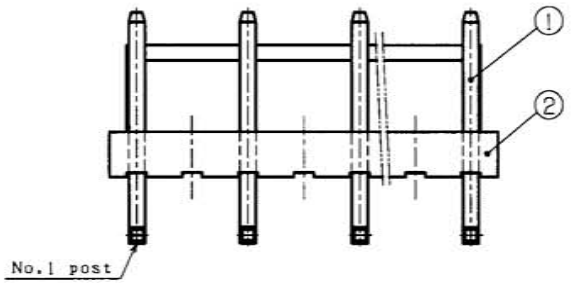

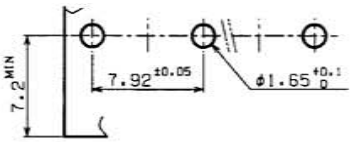

Recommendable P.C.Board hole layout

Part No.	Circuits	A	B	C
B5P9S-VH-( ) (LF) (SN)	5	31.68	35.58	33.08
B4P7S-VH-( ) (LF) (SN)	4	23.76	27.66	25.16
B3P5S-VH-( ) (LF) (SN)	3	15.84	19.74	17.24
B2P3S-VH-( ) (LF) (SN)	2	7.92	11.82	9.32

Part No.	Color
B( )P( )S-VH (LF) (SN)	Natural
B( )P( )S-VH-BK (LF) (SN)	Black
B( )P( )S-VH-BL (LF) (SN)	Blue
B( )P( )S-VH-R (LF) (SN)	Red
B( )P( )S-VH-Y (LF) (SN)	Yellow
B( )P( )S-VH-M (LF) (SN)	Green

JST CORP JUL 25 2006 WEC

No.	PART NAME	MATERIAL	SURFACE FINISH	REMARKS
2	WAFER	66 NYLON		UL94V-0
1	POST	BRASS	COPPER-UNDERPLATED TIN-PLATED	

SIZE A3	UNIT METRIC	SCALE 3:1	PROJECTION	DATE APR.12.2005
APPROVED S.K	CHECKED	DESIGNED T.S	DRAWN M.O	CUSTOMER
SERIES NAME	VH CONNECTOR			
PART No.	B( )P( )S-VH-( ) (LF) (SN)			
DRAWING No.	KRD-35752	RO		

JST J.S.T.MFG.CO., LTD.

THIS DRAWING CONTAINS INFORMATION THAT IS PROPRIETARY TO J.S.T. AND SHOULD NOT BE USED WITHOUT WRITTEN PERMISSION.

EC4109-2

Downloaded from Arrow.com.