High Voltage Contactor

Series/Type: HVC500B-24S

The following products presented in this data sheet are being withdrawn.

Ordering Code	Substitute Product	Date of Withdrawal	Deadline Last Orders	Last Shipments
B88269X2350C011	B88269X3580C011	2026-08-21	2026-12-04	2027-03-05

Please contact your nearest TDK sales office if you need support in selecting a suitable substitute. The addresses of our worldwide sales network are presented at www.tdk-electronics.tdk.com/sales.

Downloaded from Arrow.com.

Product description

The HVC series has been especially designed to meet the requirements of high-voltage DC switching applications. The optimized hermetically sealed design exhibits excellent reliability performance against harsh environments. HVC series can be used in a wide range of applications.

Features

- Gas-filled and hermetically sealed
- No EMI, low operating power
- No polarity of contact terminals
- RoHS compatible

Applications

- Battery charge/ discharge systems
- Renewable energy storage systems
- DC high-voltage/ high-current applications
- DC fast charging stations

Characteristics

Contact arrangement Inner contact material Internal contact gap (full disconnection)	1A Cu alloy 3.2 (2 × 1.6)	 mm
Recommended connection cable cross section [1]	> 200	mm²
Coil wires - length - cross section - material	 300 AWG20 Cu	 mm
Auxiliary contact - max. voltage - max. current - max. switching power - max. resistance - wire cross section	 36 250 3 200 AWG26	 V_{DC} mA_{DC} W mΩ
Vibration in closed state, xyz-axis - shock, 11 ms ½ sine, peak - vibration, sine 100 … 2000 Hz, peak - wideband random vibration, 10 ... 1000 Hz [2]	 196 196 49	 m/s^2 m/s^2 m/s^2_{RMS}
Operation and storage [3] - temperature - humidity - air pressure	 −40 ... +85 5 … 85 69 … 106	 °C % kPA
Climatic category (IEC 60068-1)	40/085/21	
Weight	~ 500	g
Certifications	UL 60947-4-1 (E491412) CE	

See “Notes” on page 8

Downloaded from Arrow.com.

Specification [4]

Contact			
Maximum operating voltage		1000	V_{DC}
Continuous carry current	I_{th}	500	A_{DC}
Temporary overcurrent (10 min)	I_{CW1}	600	A_{DC}
Temporary overcurrent (1 min)	I_{CW2}	750	A_{DC}
Rated operational voltage [5]	U_e	1000	V_{DC}
Rated operational current [5]	I_e	100	A_{DC}
Mechanical endurance [6]		1 000 000	switchings
Maximum cut-off current (1 operation) [7, 8]		2000	A_{DC}
Contact resistance (> 100 A_{DC})			
- typical		0.125	mΩ
- max.		0.25	mΩ
Insulation resistance at 1000 V_{DC} (initial)			
- contact to contact / contact to coil		> 1	GΩ
Dielectric strength			
- contact to contact / contact to coil [9]		> 4400	V_{AC}
Operating time			
- make		< 35	ms
- break		< 15	ms
Coil [10]			
Rated operation voltage	U_c	24	V_{DC}
Operating voltage range	U_1 … U_2	18 … 32	V_{DC}
Pick-up voltage (max.)	U_1	18	V_{DC}
Drop-out voltage (min.)		2	V_{DC}
Minimum holding current		0.08	A_{DC}
Power at nominal voltage [11]		6	W
Nominal resistance		96	Ω

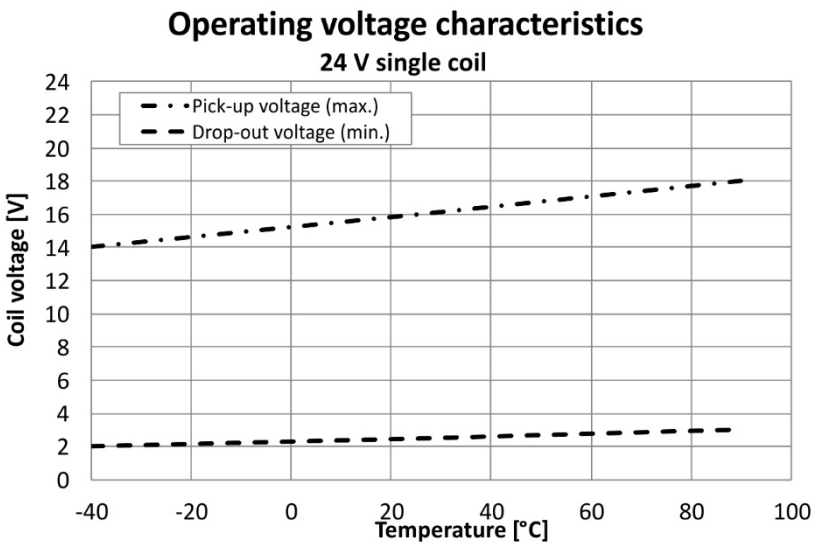

See “Notes” on page 8

Downloaded from Arrow.com.

Characteristics [12, 13]

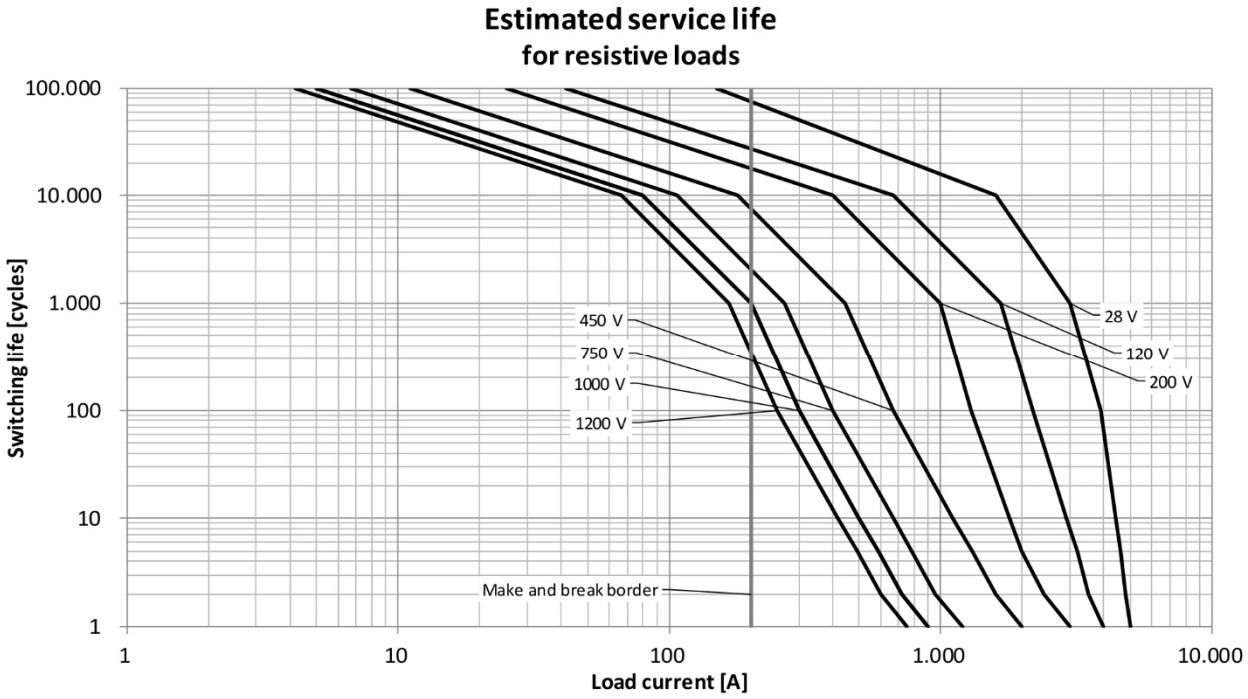

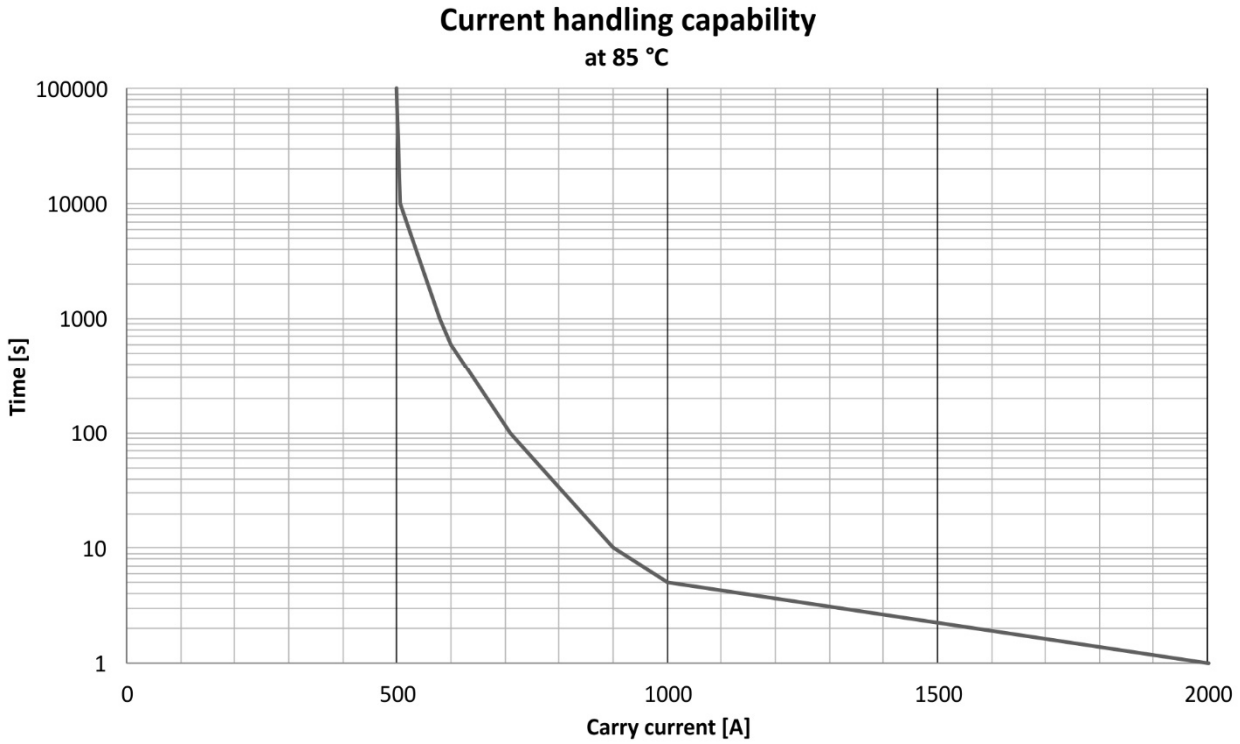

See “Notes” on page 8

Downloaded from Arrow.com.

Dimensional drawing in mm

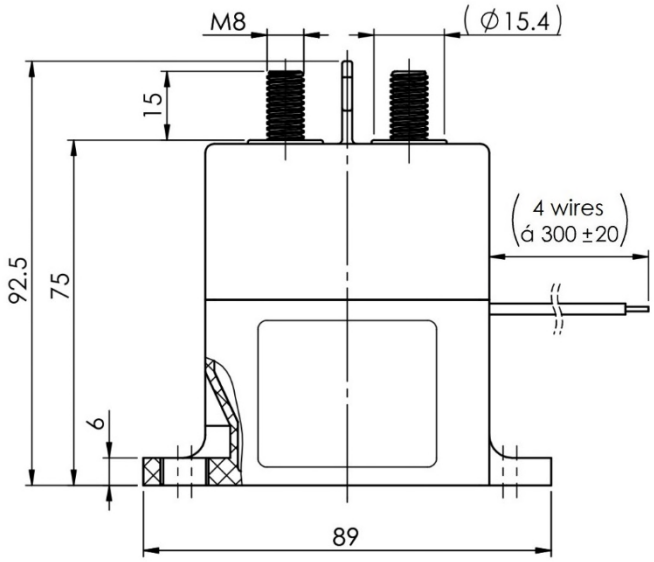

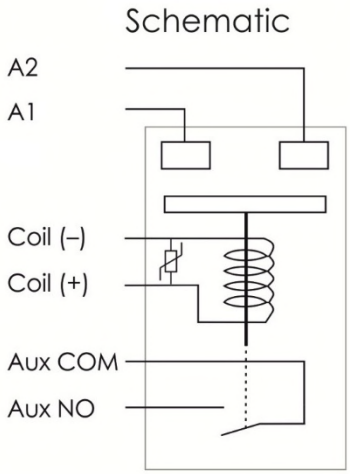

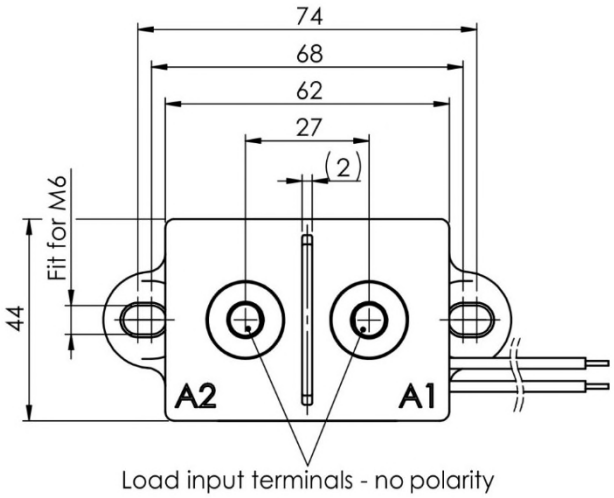

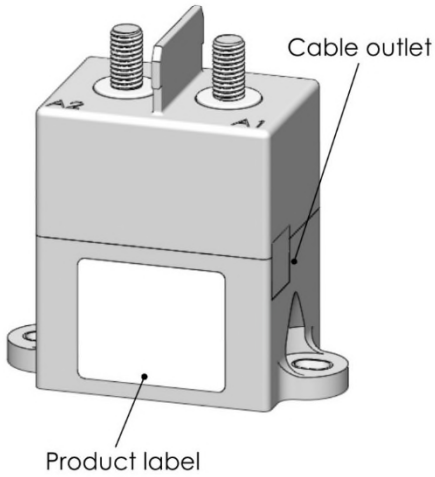

In case of no tolerance shown in dimensional drawing, general tolerances apply:
dimension ≤ 10 mm: ± 0.3 mm; dimension 10 to 50 mm: ± 0.6 mm; dimension > 50 mm: ± 1 mm

Connection name	Type	Marking	Finishing	Remarks
A1	Main terminal	A1	copper contact surface	tightening torque 6...8 Nm; 7 Nm recommended
A2	Main terminal	A2		
Coil (+)	Coil wire	red	stripped and tinned	max. allowable pull force 10 N
Coil (–)	Coil wire	black		
Aux COM	Auxiliary contact wire	white	stripped and tinned	
Aux NO	Auxiliary contact wire	blue		
Notes: Auxiliary contacts “blue” and “white” are normally open. When the contacts are short and the coil voltage is “0 V”, the part is stuck. Coil (+) and coil (–) are suppressed with a surge protection device, see “Cautions and warnings”.				

Downloaded from Arrow.com.

Auxiliary contact

Example circuit to realize stuck detection:

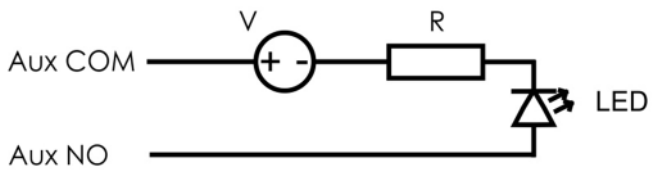

In case the contactor is stuck, the Aux COM (white) and Aux NO (blue) wires will be short, hence the circuit is closed and the LED will be on.

Packing unit

*B88269X…**C 11** = 1 pc. in cardboard box*

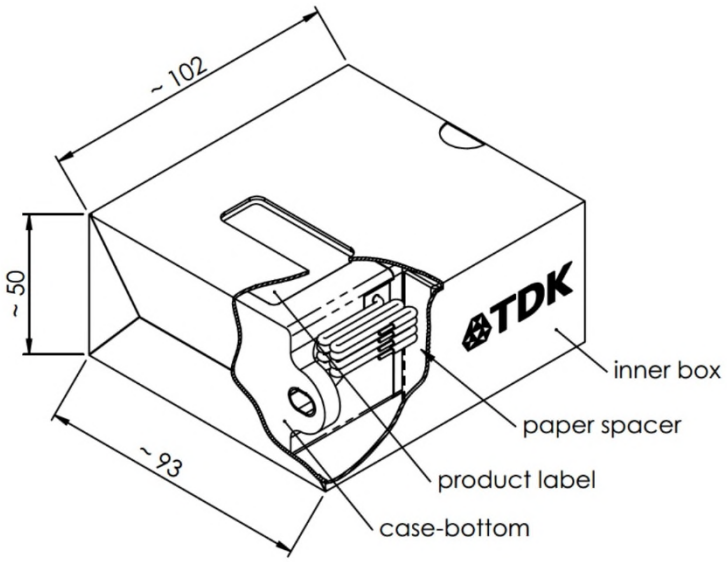

Downloaded from Arrow.com.

Accessories

Nuts and washers: (PE-bag enclosed in packing unit)

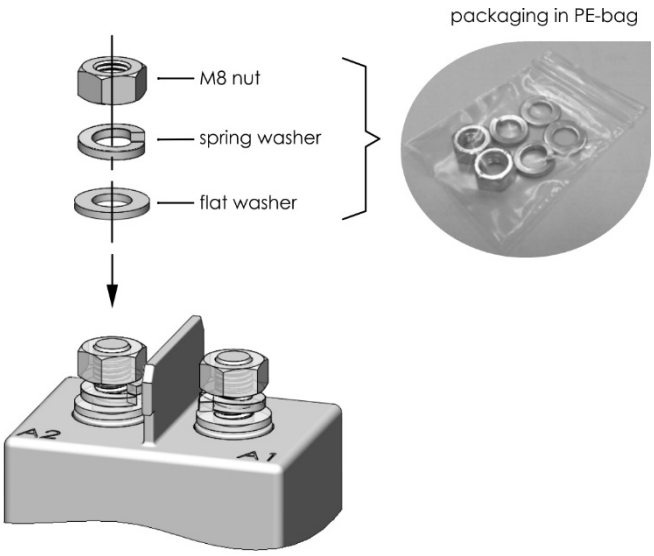

Cover shield:

To order if required:

*B88269X2200**C101** = 10 pcs. cover shields in a box*

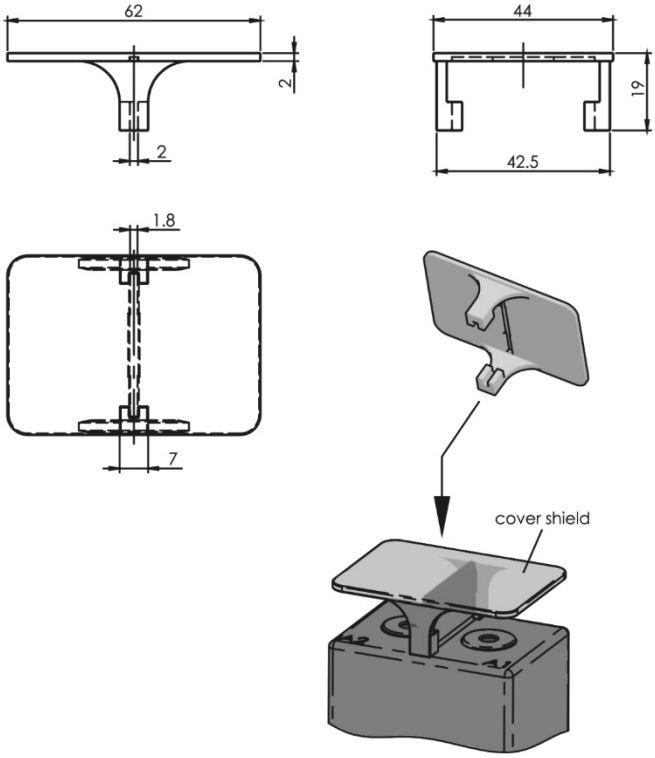

Downloaded from Arrow.com.

Notes:

[1] The diameter must be matched to actual current and operation temperature (see: Cautions and warnings).
[2] Referring to IEC 60068-2-64
[3] Freezing or condensing must be avoided.
[4] Referring to IEC/EN 61810-1
[5] Referring to IEC 60947-4-1, 6000 operations make & break
[6] Duty cycle 50%, cycle duration 1 s, value represents B10 life time acc. to Weibull analysis.
[7] Tested at 450 V for resistive loads with $\tau \leq 1$ ms
[8] No fire and no explosion will occur after this break. Afterwards, the dielectric strength and insulation resistance may not meet initial data sheet specification.
[9] Detection limit 10 mA
[10] Specified referring to JIS C 5442 (temperature 15 °C to 35 °C, humidity 25% to 85% RH).
[11] Tolerance ±10% at thermal equilibrium
[12] End of life is reached when insulation resistance is < 50 MΩ at 1000 V.
[13] For currents > “make & break border” only break is permitted to avoid tack welding, duty cycle 1%, 600 s cycle duration. For currents < “make & break border” make and break is permitted duty cycle 10%, 6 s cycle duration.

Cautions and warnings

- To guarantee a satisfying performance of this contactor in the application we strongly recommend to implement redundancy, take measures to prevent the spread of fire, take the possibilities of malfunction into account, and perform regular maintenance.
- It is also required to always use a suitable backup fuse for the contactor.
- It is not allowed to use the contactor outside of the parameter range specified in this datasheet. This also includes temperature and humidity. Overloading may destroy the component.
- The lifetime depends on several factors: e.g. load type, driving circuit and ambient conditions. We recommend checking the performance of the part under actual conditions.
- For capacitive loads the inrush current through the contactor should not exceed the specified limit (see make and break border). Otherwise tack welding and permanent failure will occur.
- Break of inductive loads with $\tau > 1$ ms will shorten the lifetime and failure may occur.
- In the event of a break under inductive load, the voltage at the connection terminals of the contactor must not exceed the nominal operating voltage by more than 10 %.
- For continuous high current operation, make sure that temperature at the connection terminals does not exceed 120 °C by selecting an appropriate connection cable cross section or active cooling.
- The leads to the contactor must be securely tightened to the terminals (check torque specification in data sheet), otherwise current stress may generate sparks and heating. Use only suitable screws or bolts and nuts for all mechanical connections to the contactor and verify their functionality in the application. The recommended torque range is suitable for multiple fixations; the maximum torque is suited for one time fixation only.
- After long-term operation, the contactor coil resistance is increased due to the temperature rise. If the contactor is switched on immediately afterwards the coil characteristics may be deteriorated.
- The coil contacts need to be protected from overvoltage when switching off. Therefore, a protection device is installed in parallel. No further protection device shall be used parallel to the coil.

Downloaded from Arrow.com.

- For successful pick-up, the voltage cannot be ramped up slowly. The voltage needs to be applied instantly to at least the maximum pick-up voltage.
- Simultaneously applied maximum operation parameters for e.g. coil voltage, over currents, temperature, vibration etc. may lead to reduced lifetime. We recommend applying rated settings to achieve optimum life performance.
- For contactors equipped with auxiliary contacts: The auxiliary contact ("stuck detection") is no real parallel contact and delivers only an indirect source of information about the actual switching status.
- For additional safety, the contactor must be mounted in a way that the vertical axis of the part (Z-axis) is not in line with the main shock axis inside the application.
- Contactors radiate magnetic and electromagnetic fields. Please ensure that other components mounted in close proximity are not affected.
- In case two contactors are mounted in close proximity, a clearance distance of 20 mm has to be kept.
- The operating life of the contactor can be affected by strong magnetic fields. Please ensure that there are no magnetic field sources in close proximity and avoid nearby installed heat sources.
- The contactor must not be operated without any load. This may increase contact resistance.
- Contactors may become hot during extended periods of current overload (burn hazard).
- Contactors must be handled with care and must not be dropped. The attached wires are not allowed to be used for lifting and handling the part (max. allowed pull-force is 10 N).
- Damaged contactors must not be re-used.
- The manufacturer cannot be held liable for failures caused by condensation or icing. The customer has to apply suitable measures to avoid these circumstances.
- This contactor is not waterproof.
- It is forbidden to use this contactor in atmospheres loaded with organic solvents (alcohol, petroleum, etc.) or strong alkaline substances (ammoniac, acids in general, etc.).
- It must be ensured that during installation and operation no kind of foreign matter adheres to the main contact. Especially oils and silicones must be avoided.
- It is forbidden to attach any kind of additional construction to or on the contactor.
- This contactor is tested and classified according to UL as an open-type device. This means the contactor is intended to be installed in an ultimate enclosure provided by a third party.

Display of ordering codes for TDK Electronics products

The ordering code for one and the same product can be represented differently in data sheets, data books, other publications, on the company website, or in order-related documents such as shipping notes, order confirmations and product labels. **The varying representations of the ordering codes are due to different processes employed and do not affect the specifications of the respective products**. Detailed information can be found on the Internet under www.tdk-electronics.tdk.com/orderingcodes.

Downloaded from Arrow.com.

Important notes

The following applies to all products named in this publication:

1. Some parts of this publication contain **statements about the suitability of our products for certain areas of application**. These statements are based on our knowledge of typical requirements that are often placed on our products in the areas of application concerned. We nevertheless expressly point out **that such statements cannot be regarded as binding statements about the suitability of our products for a particular customer application.** As a rule we are either unfamiliar with individual customer applications or less familiar with them than the customers themselves. For these reasons, it is always ultimately incumbent on the customer to check and decide whether a product with the properties described in the product specification is suitable for use in a particular customer application.
2. We also point out that **in individual cases, a malfunction of electronic components or failure before the end of their usual service life cannot be completely ruled out in the current state of the art, even if they are operated as specified.** In customer applications requiring a very high level of operational safety and especially in customer applications in which the malfunction or failure of an electronic component could endanger human life or health (e.g. in accident prevention or life-saving systems), it must therefore be ensured by means of suitable design of the customer application or other action taken by the customer (e.g. installation of protective circuitry or redundancy) that no injury or damage is sustained by third parties in the event of malfunction or failure of an electronic component.
3. **The warnings, cautions and product-specific notes must be observed.**
4. In order to satisfy certain technical requirements, **some of the products described in this publication may contain substances subject to restrictions in certain jurisdictions (e.g. because they are classed as hazardous)**. Useful information on this will be found in our Material Data Sheets on the Internet (www.tdk-electronics.tdk.com/material). Should you have any more detailed questions, please contact our sales offices.
5. We constantly strive to improve our products. Consequently, **the products described in this publication may change from time to time**. The same is true of the corresponding product specifications. Please check therefore to what extent product descriptions and specifications contained in this publication are still applicable before or when you place an order. We also **reserve the right to discontinue production and delivery of products**. Consequently, we cannot guarantee that all products named in this publication will always be available. The aforementioned does not apply in the case of individual agreements deviating from the foregoing for customer-specific products.
6. Unless otherwise agreed in individual contracts, **all orders are subject to our General Terms and Conditions of Supply.**
7. **Our manufacturing sites serving the automotive business apply the IATF 16949 standard.** The IATF certifications confirm our compliance with requirements regarding the quality management system in the automotive industry. Referring to customer requirements and customer specific requirements (“CSR”) TDK always has and will continue to have the policy of respecting individual agreements. Even if IATF 16949 may appear to support the acceptance of unilateral requirements, we hereby like to emphasize that **only requirements mutually agreed upon can and will be implemented in our Quality Management System.** For clarification purposes we like to point out that obligations from IATF 16949 shall only become legally binding if individually agreed upon.

Downloaded from Arrow.com.

Important notes

8. The trade names EPCOS, CeraCharge, CeraDiode, CeraLink, CeraPad, CeraPlas, CSMP, CTVS, DeltaCap, DigiSiMic, ExoCore, FilterCap, FormFit, LeaXield, MiniBlue, MiniCell, MKD, MKK, MotorCap, PCC, PhaseCap, PhaseCube, PhaseMod, PhiCap, PowerHap, PQSine, PQvar, SIFERRIT, SIFI, SIKOREL, SilverCap, SIMDAD, SiMic, SIMID, SineFormer, SIOV, ThermoFuse, WindCap are **trademarks registered or pending** in Europe and in other countries. Further information will be found on the Internet at www.tdk-electronics.tdk.com/trademarks.

Release 2018-10

Downloaded from Arrow.com.