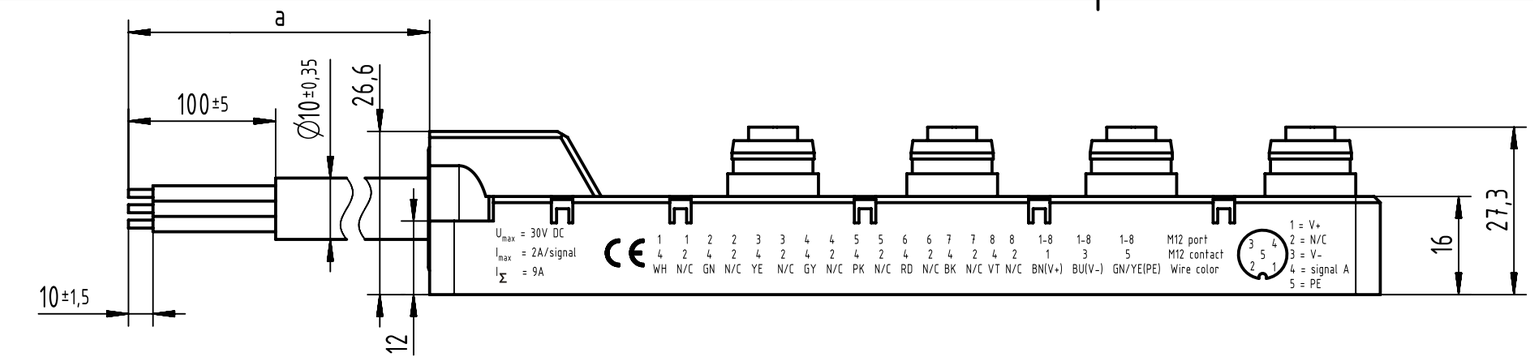

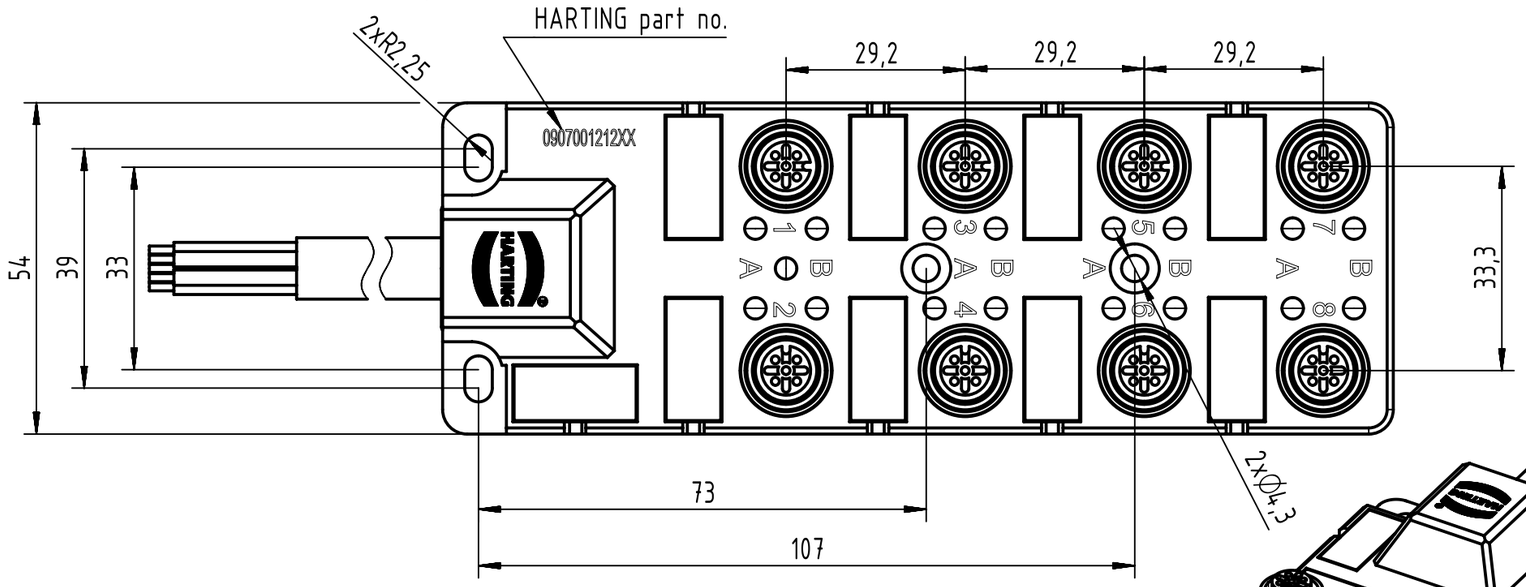

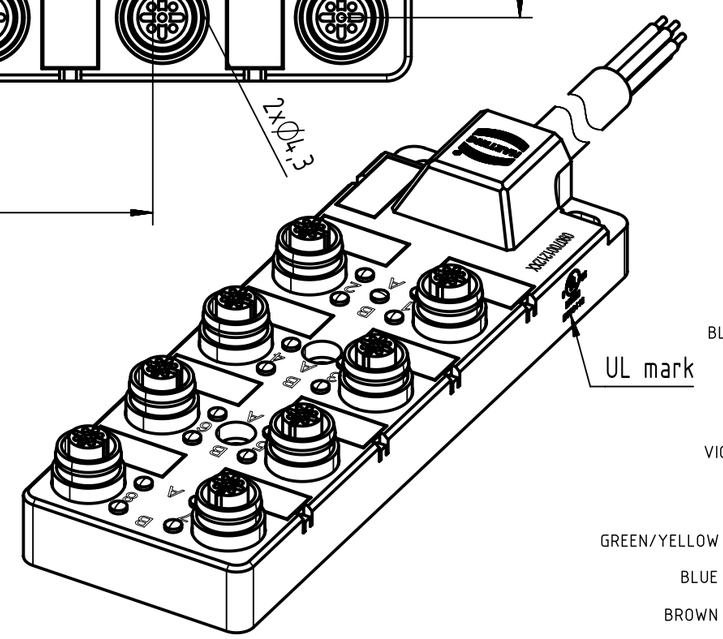

c UL us LISTED
E500416

Loading plan

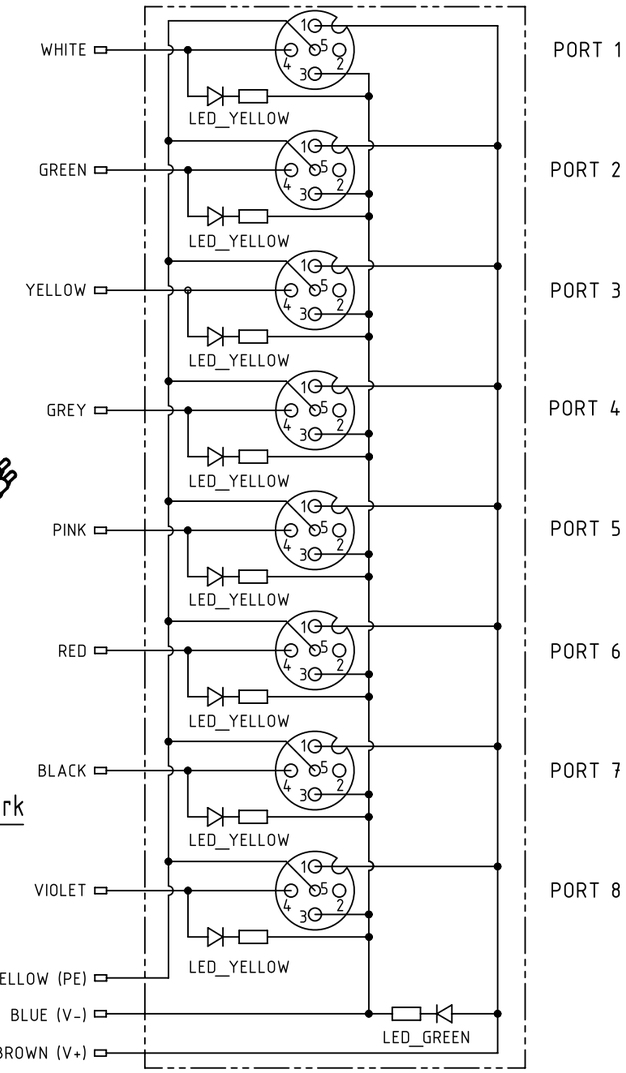

- Protection level: IP67
- Temperature range: -25°C ... +80°C

Cont. no	HARTING part no.	Type of cable	Dim. a[m]
6	090700121250	PVC, 3x0.75mm² + 8x0.34mm², black	10
5	090700121251		5
4	090700121253		2
3	090700121200	PUR, 3x0.75mm² + 8x0.34mm², black	10
2	090700121201		5
1	090700121203		2

All Dimensions in mm | Tech. Character. | Free size tol. | According to production drawing

All rights reserved

Department HCS - RO

HARTING Customised Solutions
D-32339 Espelkamp

Created by	Inspected by	Standardisation	Date	State
COSTEA Costea	402676 Gross	MUNTEANV Muntean	2020-04-14	Final Release

Title: har-SAB M12/8/4p

Doc-Key / ECM-Nr.: 100831535/UGD/000/C 500000171204

Type: TB | Number: 0907001212XX | Rev.: C | Page: 1/1

A3

Downloaded from Arrow.com.