Low Voltage PCB Mount - Low Profile - 2 VA to 48 VA *229 Series*







Features

- Low profile mounting, dual - split bobbin design.
- Low primary to secondary coupling, balanced windings, no electrostatic shield required and low EMF radiation due to semi-toroidal design.
- Universal dual primary 115/230V - 50/60 Hz.
- High insulation - Hipot of 1,750V RMS.
- Class B insulation - 130 degrees C.
- C UL US recognized. UL file E207860

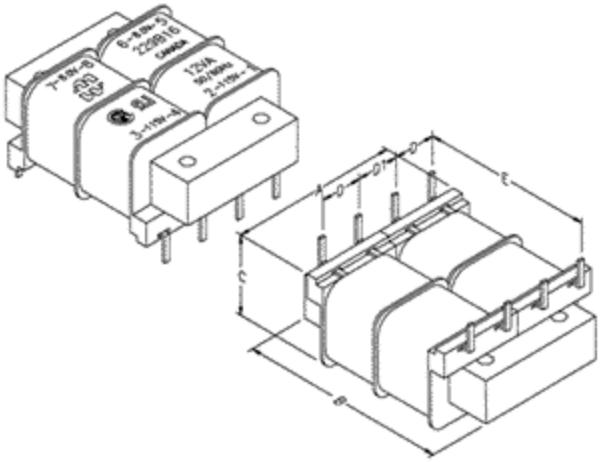

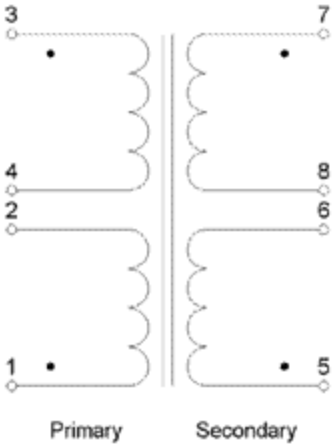

Dual Primary 115/230V Part No.	Size (VA)	Secondary (RMS) Series	Secondary (RMS) Parallel
229E10	2	10V C.T. @ 250ma	5V @ 500ma
229A10	6	10V C.T. @ 600ma	5V @ 1.2A
229B10	12	10V C.T. @ 1.2A	5V @ 2.4A
229C10	24	10V C.T. @ 2.4A	5V @ 4.8A
229D10	48	10V C.T. @ 4.8A	5V @ 9.6A
229E12	2	12.6V C.T. @ 200ma	6.3V @ 400ma
229A12	6	12.6V C.T. @ 450ma	6.3V @ 900ma
229B12	12	12.6V C.T. @ 900ma	6.3V @ 1.8a
229C12	24	12.6V C.T. @ 1.9A	6.3V @ 3.8A
229D12	48	12.6V C.T. @ 3.8A	6.3V @ 7.6A
229E16	2	16V C.T. @ 150ma	8V @ 300ma
229A16	6	16V C.T. @ 350ma	8V @ 700ma
229B16	12	16V C.T. @ 700ma	8V @ 1.4A
229C16	24	16V C.T. @ 1.5A	8V @ 3A
229D16	48	16V C.T. @ 3A	8V @ 6A
229E20	2	20V C.T. @ 125ma	10V @ 250ma
229A20	6	20V C.T. @ 300ma	10V @ 600ma
229B20	12	20V C.T. @ 600ma	10V @ 1.2A
229C20	24	20V C.T. @ 1.2A	10V @ 2.4A
229D20	48	20V C.T. @ 2.4A	10V @ 4.8A
229E24	2	24V C.T. @ 100ma	12V @ 200ma
229A24	6	24V C.T. @ 250ma	12V @ 500ma
229B24	12	24V C.T. @ 500ma	12V @ 1A
229C24	24	24V C.T. @ 1A	12V @ 2A
229D24	48	24V C.T. @ 2A	12V @ 4A

Downloaded from Arrow.com.

Dual Primary 115/230V Part No.	Size (VA)	Secondary (RMS) Series	Parallel
229E30	2	30V C.T. @ 85ma	15V @ 170ma
229A30	6	30V C.T. @ 200ma	15V @ 400ma
229B30	12	30V C.T. @ 400ma	15V @ 800ma
229C30	24	30V C.T. @ 800ma	15V @ 1.6A
229D30	48	30V C.T. @ 1.6A	15V @ 3.2A
229E34	2	34V C.T. @ 75ma	17V @ 150ma
229A34	6	34V C.T. @ 170ma	17V @ 340ma
229B34	12	34V C.T. @ 340ma	17V @ 680ma
229C34	24	34V C.T. @ 700ma	17V @ 1.4A
229D34	48	34V C.T. @ 1.4A	17V @ 2.8A
229E40	2	40V C.T. @ 60ma	20V @ 120ma
229A40	6	40V C.T. @ 150ma	20V @ 300ma
229B40	12	40V C.T. @ 300ma	20V @ 600ma
229C40	24	40V C.T. @ 600ma	20V @ 1.2A
229D40	48	40V C.T. @ 1.2A	20V @ 2.4A
229E56	2	56V C.T. @ 45ma	28V @ 90ma
229A56	6	56V C.T. @ 100ma	28V @ 200ma
229B56	12	56V C.T. @ 200ma	28V @ 400ma
229C56	24	56V C.T. @ 425ma	28V @ 850ma
229D56	48	56V C.T. @ 850ma	28V @ 1.7A
229E88	2	88V C.T. @ 28ma	44V @ 56ma
229A88	6	88V C.T. @ 65ma	44V @ 130ma
229B88	12	88V C.T. @ 130ma	44V @ 260ma
229E120	2	120V C.T. @ 20ma	60V @ 40ma
229A120	6	120V C.T. @ 50ma	60V @ 100ma
229B120	12	120V C.T. @ 100ma	60V @ 200ma
229E230	2	230V C.T. @ 10ma	115V @ 20ma
229A230	6	230V C.T. @ 25ma	115V @ 50ma
229B230	12	230V C.T. @ 50ma	115V @ 100ma

Mechanical & Schematic Data

Size		PC Board				Dimensions					
(VA)	Regulation	Card Spacing	Pin Size			A	B	C	D	D1	E
2	0.3	0.75	0.02	x	0.04	1.56	1.88	0.65	0.38	0.38	1.60
6	0.3	1.00	0.02	x	0.04	1.56	1.88	0.85	0.38	0.38	1.60
12	0.2	1.25	0.02	x	0.04	2.00	2.50	1.07	0.50	0.50	2.00
24	0.15	1.50	0.04	x	0.04	2.25	2.87	1.25	0.60	0.53	1.90
48	0.15	1.50	0.04	x	0.04	2.50	3.12	1.38	0.60	0.66	2.18

Tags: **power transformers**, **low voltage**, **PCB mount**, **circuit board**, **low profile**, **toroidal**

Data subject to change without notice.

© 2026. Hammond Manufacturing Ltd. All rights reserved.

Downloaded from Arrow.com.