THIS DRAWING IS UNPUBLISHED. RELEASED FOR PUBLICATION
© COPYRIGHT copyright_dBYe- ALL RIGHTS RESERVED.

REVISIONS					
P	LTR	DESCRIPTION	DATE	DWN	APVD
	A	NEW DRAWING	04APR2019	RS	JO
	A1	PART OBSOLESCENCE	21APR2026	LS	SRK

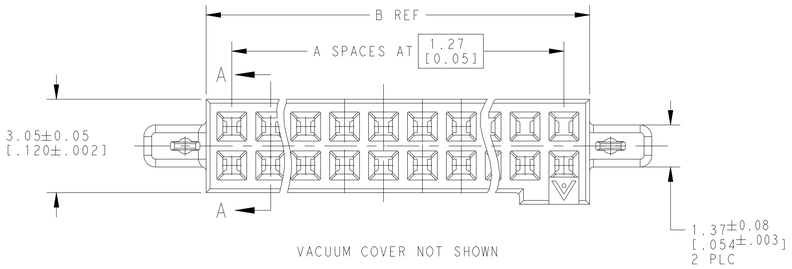

VACUUM COVER NOT SHOWN

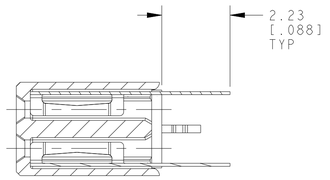

SECTION A-A

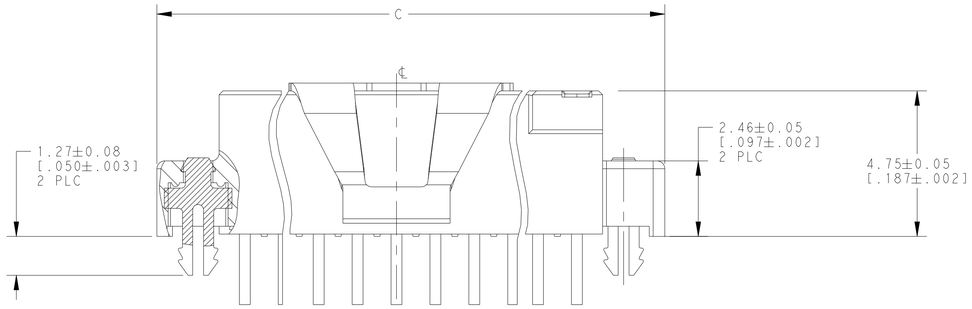

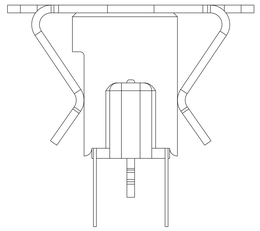

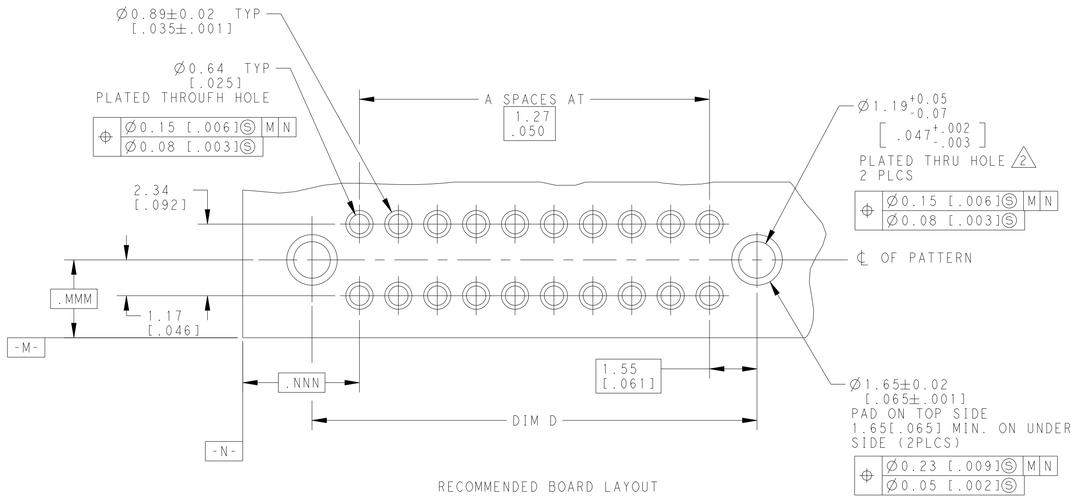

RECOMMENDED BOARD LAYOUT

1. 0.00076[.000030] GOLD IN LOCALIZED PLATE AREA 0.00381[.000150] TIN-LEAD ON SOLDER TAILS ALL OVER 0.00127[.000050] NICKEL
2. USE 1.55±0.02[.0610±.0010] DRILLED HOLE (1.55mm DRILL). FINISH TO BE TIN/LEAD OVER 0.02[.001] MIN COPPER.
3. PLATING 0.0038 [.000150] TIN-LEAD OVER 0.00127 [.000050] NICKEL ON HOLDDOWN.
4. IF PLANNING TO USE MORE THAN ONE MATING PAIR OF CONNECTORS TO INTERCONNECT 2 BOARDS PLEASE REFER TO PARA. 3.3 IN THR APPLICATION SPEC, #114-7010.
5. PACKED IN TUBES.
6. HOUSING: LCP, COLOR-BLACK, CONTACT: COPPER ALLOY HOLDDOWN: COPPER ALLOY VACCUM COVER: ALLUMINIUM ALLOY
7. 0.00076 [.000030] GOLD IN LOCALIZED PLATE AREA 0.00381 [.000150] TIN ON SOLDER TAILS ALL OVER 0.00127 [.000050] NICKEL.
8. PLATING 0.0038 [.000150] TIN OVER 0.00127 [.000050] NICKEL ON HOLDDOWN.
9. USE 1.55±0.02[.0610±.0010] DRILLED HOLE (1.55mm DRILL). FINISH TO BE TIN/LEAD OVER 0.02[.001] MIN COPPER.
10. OBSOLETE

	D	C	B	A	NUMBER OF POSITIONS	PART NUMBER
7 8	65.28 [2.570]	67.97 [2.676]	63.91 [2.516]	49	100	6-2267254-0
7 8	52.93 [2.320]	61.62 [2.426]	57.55 [2.266]	44	90	5-2267254-9
7 8	52.58 [2.070]	55.27 [2.176]	51.21 [2.016]	39	80	5-2267254-8
7 8	46.23 [1.820]	48.92 [1.926]	44.86 [1.766]	34	70	5-2267254-7
7 8	39.88 [1.570]	42.57 [1.676]	38.51 [1.516]	29	60	5-2267254-6
7 8	33.53 [1.320]	36.22 [1.426]	32.16 [1.266]	24	50	5-2267254-5
7 8	27.18 [1.070]	29.87 [1.176]	25.81 [1.016]	19	40	5-2267254-4
7 8	20.83 [.820]	23.52 [.926]	19.46 [.766]	14	30	5-2267254-3
7 8	14.48 [.570]	17.17 [.676]	13.11 [.516]	9	20	5-2267254-2
7 8	8.12 [.320]	10.82 [.426]	6.75 [.266]	4	10	5-2267254-1
10 1 3	65.28 [2.570]	67.97 [2.676]	63.91 [2.516]	49	100	1-2267254-0
10 1 3	52.93 [2.320]	61.62 [2.426]	57.55 [2.266]	44	90	2267254-9
10 1 3	52.58 [2.070]	55.27 [2.176]	51.21 [2.016]	39	80	2267254-8
10 1 3	46.23 [1.820]	48.92 [1.926]	44.86 [1.766]	34	70	2267254-7
10 1 3	39.88 [1.570]	42.57 [1.676]	38.51 [1.516]	29	60	2267254-6
10 1 3	33.53 [1.320]	36.22 [1.426]	32.16 [1.266]	24	50	2267254-5
10 1 3	27.18 [1.070]	29.87 [1.176]	25.81 [1.016]	19	40	2267254-4
10 1 3	20.83 [.820]	23.52 [.926]	19.46 [.766]	14	30	2267254-3
10 1 3	14.48 [.570]	17.17 [.676]	13.11 [.516]	9	20	2267254-2
10 1 3	8.12 [.320]	10.82 [.426]	6.75 [.266]	4	10	2267254-1
FINISH						

THIS DRAWING IS A CONTROLLED DOCUMENT.

DIMENSIONS: mm [INCH]

TOLERANCES UNLESS OTHERWISE SPECIFIED:
0 PLC ±-
1 PLC ±-
2 PLC ±
3 PLC ±0.13[.005]
4 PLC ±-
ANGLES ±-

MATERIAL 6

FINISH - SEE TABLE

DWN RAVI.S	04APR2019
CHK J.OLSON	04APR2019
APVD J.OLSON	04APR2019
PRODUCT SPEC 108-1332	
APPLICATION SPEC 114-7010	
WEIGHT -	

TE Connectivity

NAME ASSY, RECEPTACLE, VERT. DOUBLE ROW, THROUGH HOLE, AMPMODU 50/50 GRID CONNECTOR

SIZE	CAGE CODE	DRAWING NO	RESTRICTED TO
A1	00779	C-2267254	-

CUSTOMER DRAWING | SCALE 10:1 | SHEET 1 OF 1 | REV A1

4805 (3/13)

Downloaded from Arrow.com.