Overview

The F871 Series is constructed of metallized polypropylene film encapsulated with self-extinguishing resin in a box of material recognized to UL 94 V–0.

Applications

For worldwide use as electromagnetic interference (EMI) suppression filter in across-the-line applications requiring X1 safety classification. Not for use in "series with mains" type applications.

Benefits

- Approvals: ENEC, UL, cUL, CQC
- Rated voltage: 330 VAC 50/60 Hz
- Capacitance range: 0.001 – 8.2 µF
- Lead spacing: 10 – 37.5 mm
- Capacitance tolerance: ±20%, ±10%
- Climatic category 40/110/56, IEC 60068–1
- Tape & Reel in accordance with IEC 60286–2
- RoHS Compliant and lead-free terminations
- Operating temperature range of -40°C to +110°C
- 100% screening factory test at 2,500 VDC

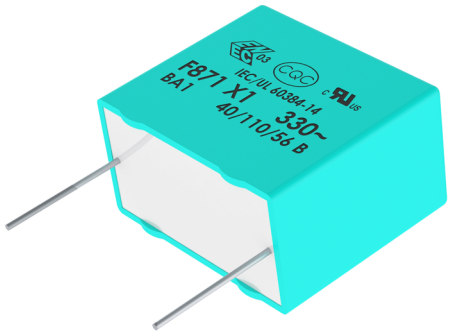

Part Number System

F	871	B	K	104	M	330	C
Capacitor Class	Series	Lead Spacing (mm)	Size Code	Capacitance Code (pF)	Capacitance Tolerance	Voltage (VAC)	Packaging
F = Film	X1, Metallized Polypropylene	A = 10 B = 15 D = 22.5 F = 27.5 R = 37.5	See Dimension Table	First two digits represent significant figures. Third digit specifies number of zeros.	K = ±10% M = ±20%	330	See Ordering Options Table

Downloaded from Arrow.com.

Ordering Options Table

Lead Spacing Nominal (mm)	Type of Leads and Packaging	Lead Length (mm)	Lead and Packaging Code
10	**Standard Lead and Packaging Options**		
	Bulk (Bag) – Short Leads	4+2/−0	C
	Bulk (Bag) – Long Leads	17+0/−1	A
	Tape & Reel (Standard Reel)	H_0= 18.5±0.5	L
	Other Lead and Packaging Options		
	Bulk (Bag) – Short Leads	3.2 +0.3/-0.2	CL32K
	Bulk (Bag) – Maximum Length Leads	20+5/−0	ALL0L
	Ammo Pack	H_0= 18.5±0.5	R
	Tape & Reel (Large Reel)	H_0= 18.5±0.5	P
15	**Standard Lead and Packaging Options**		
	Bulk (Bag) – Short Leads	4+2/−0	C
	Bulk (Bag) – Long Leads	17+0/−1	A
	Tape & Reel (Standard Reel)	H_0= 18.5±0.5	L
	Pizza Pack	4+2/−0	Z
	Other Lead and Packaging Options		
	Pizza – Short Leads	3.2 +0.3/-0.2	ZL32K
	Bulk (Bag) – Maximum Length Leads	25+5/−0	ALR0L
	Ammo Pack	H_0= 18.5±0.5	R
	Tape & Reel (Large Reel)	H_0= 18.5±0.5	P
22.5	**Standard Lead and Packaging Options**		
	Pizza – Long Leads	17+0/−1	ZLH0J
	Pizza Pack	4+2/−0	Z
	Other Lead and Packaging Options		
	Pizza – Short Leads	3.2 +0.3/-0.2	ZL32K
	Tape & Reel (Standard Reel)	H_0= 18.5±0.5	L
	Tape & Reel (Large Reel)	H_0= 18.5±0.5	P
	Ammo Pack	H_0= 18.5±0.5	R
27.5	**Standard Lead and Packaging Options**		
	Pizza – Long Leads	17+0/−1	ZLH0J
	Pizza Pack	4+2/−0	Z
	Pizza – Short Leads	3.2 +0.3/-0.2	ZL32K
37.5	**Standard Lead and Packaging Options**		
	Pizza – Long Leads	17+0/−1	ZLH0J
	Pizza Pack	4+2/−0	Z
	Pizza – Short Leads	3.2 +0.3/-0.2	ZL32K

Downloaded from Arrow.com.

Dimensions – Millimeters

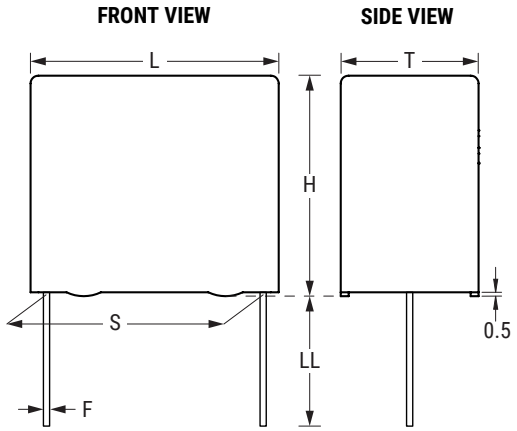

Size Code	Version	S		T		H		L		F	
		Nominal	Tolerance	Nominal	Tolerance	Nominal	Tolerance	Nominal	Tolerance	Nominal	Tolerance
AG		10.0	±0.4	4.0	+0/-0.5	9.0	+0/-0.5	13.0	+0/-0.5	0.6	±0.05
AK		10.0	±0.4	5.0	+0/-0.5	11.0	+0/-0.5	13.0	+0/-0.5	0.6	±0.05
AP		10.0	±0.4	6.0	+0/-0.5	12.0	+0/-0.5	13.0	+0/-0.5	0.6	±0.05
AO		10.0	±0.4	7.0	+0/-0.5	17.0	+0/-0.5	13.0	+0/-0.5	0.6	±0.05
AL	Low Profile	10.0	±0.4	9.5	+0/-0.5	7.5	+0/-0.5	13.0	+0/-0.5	0.6	±0.05
AE	Special Version	10.0	±0.4	4.0	+0/-0.5	8.0	+0/-0.5	13.0	+0/-0.5	0.6	±0.05
BB		15.0	±0.4	4.0	+0/-0.5	10.0	+0/-0.5	18.0	+0/-0.5	0.8	±0.05
BC		15.0	±0.4	5.0	+0/-0.5	11.0	+0/-0.5	18.0	+0/-0.5	0.8	±0.05
BE		15.0	±0.4	5.5	+0/-0.5	12.5	+0/-0.5	18.0	+0/-0.5	0.8	±0.05
BG		15.0	±0.4	6.0	+0/-0.5	12.0	+0/-0.5	18.0	+0/-0.5	0.8	±0.05
BI	High Profile	15.0	±0.4	6.0	+0/-0.5	17.5	+0/-0.5	18.0	+0/-0.5	0.8	±0.05
BK		15.0	±0.4	7.5	+0/-0.5	13.5	+0/-0.5	18.0	+0/-0.5	0.8	±0.05
BO	High Profile	15.0	±0.4	7.5	+0/-0.5	18.5	+0/-0.5	18.0	+0/-0.5	0.8	±0.05
BP		15.0	±0.4	8.5	+0/-0.5	14.5	+0/-0.5	18.0	+0/-0.5	0.8	±0.05
BT		15.0	±0.4	9.0	+0/-0.5	12.5	+0/-0.5	18.0	+0/-0.5	0.8	±0.05
BS		15.0	±0.4	10.0	+0/-0.5	16.0	+0/-0.5	18.0	+0/-0.5	0.8	±0.05
BY		15.0	±0.4	11.0	+0/-0.5	19.0	+0/-0.5	18.0	+0/-0.5	0.8	±0.05
BZ	Special Version	15.0	±0.4	12.0	+0/-0.5	20.0	+0/-0.5	18.0	+0/-0.5	0.8	±0.05
BR	Low Profile	15.0	±0.4	13.0	+0/-0.5	12.0	+0/-0.5	18.0	+0/-0.5	0.8	±0.05
DB		22.5	±0.4	6.0	+0/-0.5	14.5	+0/-0.5	26.0	+0/-0.5	0.8	±0.05
DI		22.5	±0.4	7.0	+0/-0.5	16.0	+0/-0.5	26.0	+0/-0.5	0.8	±0.05
DH		22.5	±0.4	8.0	+0/-0.5	16.0	+0/-0.5	26.0	+0/-0.5	0.8	±0.05
DJ		22.5	±0.4	8.5	+0/-0.5	17.0	+0/-0.5	26.0	+0/-0.5	0.8	±0.05
DM		22.5	±0.4	9.0	+0/-0.5	18.5	+0/-0.5	26.0	+0/-0.5	0.8	±0.05
DO		22.5	±0.4	10.0	+0/-0.5	18.5	+0/-0.5	26.0	+0/-0.5	0.8	±0.05
DP		22.5	±0.4	11.0	+0/-0.5	20.0	+0/-0.5	26.0	+0/-0.5	0.8	±0.05
DU		22.5	±0.4	13.0	+0/-0.5	22.0	+0/-0.5	26.0	+0/-0.5	0.8	±0.05
DY		22.5	±0.4	15.5	+0/-0.5	24.5	+0/-0.5	26.0	+0/-0.5	0.8	±0.05

Note: See Ordering Options Table for lead length (LL) options.

Downloaded from Arrow.com.

Dimensions – Millimeters cont.

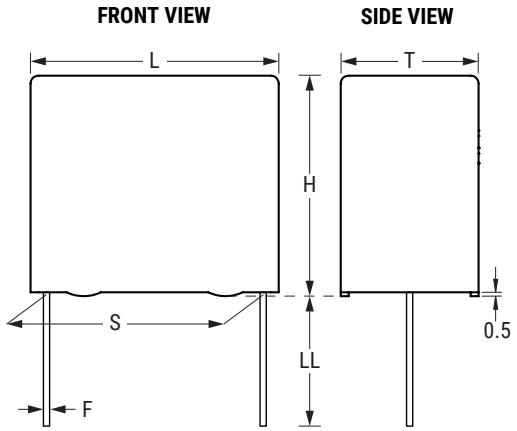

Size Code	Version	S		T		H		L		F	
		Nominal	Tolerance	Nominal	Tolerance	Nominal	Tolerance	Nominal	Tolerance	Nominal	Tolerance
FB		27.5	±0.4	9.0	+0/-0.7	17.0	+0/-0.7	31.5	+0/-0.7	0.8	±0.05
FC		27.5	±0.4	11.0	+0/-0.7	20.0	+0/-0.7	31.5	+0/-0.7	0.8	±0.05
FI		27.5	±0.4	13.0	+0/-0.7	25.0	+0/-0.7	31.5	+0/-0.7	0.8	±0.05
FN		27.5	±0.4	14.0	+0/-0.7	28.0	+0/-0.7	31.5	+0/-0.7	0.8	±0.05
FO	High Profile	27.5	±0.4	17.0	+0/-0.7	40.0	+0/-0.7	31.5	+0/-0.7	0.8	±0.05
FR		27.5	±0.4	17.5	+0/-0.7	28.0	+0/-0.7	31.5	+0/-0.7	0.8	±0.05
FS		27.5	±0.4	19.0	+0/-0.7	29.0	+0/-0.7	31.5	+0/-0.7	0.8	±0.05
FY		27.5	±0.4	22.0	+0/-0.7	37.0	+0/-0.7	31.5	+0/-0.7	0.8	±0.05
FH	Low Profile	27.5	±0.4	21.0	+0/-0.7	12.5	+0/-0.7	31.5	+0/-0.7	0.8	±0.05
FQ	Low Profile	27.5	±0.4	27.5	+0/-0.7	16.0	+0/-0.7	31.5	+0/-0.7	0.8	±0.05
FT	Low Profile	27.5	±0.4	31.0	+0/-0.7	19.0	+0/-0.7	31.5	+0/-0.7	0.8	±0.05
RB		37.5	±0.4	11.0	+0/-0.7	22.0	+0/-0.7	41.0	+0/-0.7	1	±0.05
RF		37.5	±0.4	13.0	+0/-0.7	24.0	+0/-0.7	41.0	+0/-0.7	1	±0.05
RH		37.5	±0.4	15.0	+0/-0.7	26.0	+0/-0.7	41.0	+0/-0.7	1	±0.05
RC		37.5	±0.4	16.0	+0/-0.7	28.5	+0/-0.7	41.0	+0/-0.7	1	±0.05
RD		37.5	±0.4	19.0	+0/-0.7	32.0	+0/-0.7	41.0	+0/-0.7	1	±0.05
RP		37.5	±0.4	21.0	+0/-0.7	38.0	+0/-0.7	41.0	+0/-0.7	1	±0.05
RO		37.5	±0.4	24.0	+0/-0.7	44.0	+0/-0.7	41.0	+0/-0.7	1	±0.05
RU		37.5	±0.4	30.0	+0/-0.7	45.0	+0/-0.7	41.0	+0/-0.7	1	±0.05
RV	Low Profile	37.5	±0.4	24.0	+0/-0.7	15.0	+0/-0.7	41.0	+0/-0.7	1	±0.05
RW	Low Profile	37.5	±0.4	24.0	+0/-0.7	19.0	+0/-0.7	41.0	+0/-0.7	1	±0.05

Note: See Ordering Options Table for lead length (LL) options.

Downloaded from Arrow.com.

Performance Characteristics

Rated Voltage	330 VAC 50/60 Hz			
Capacitance Range	0.001 – 8.2 µF			
Capacitance Tolerance	±20%, ±10%			
Operating Temperature Range	−40°C to +110°C			
Rated Temperature	+110°C			
Climatic Category	40/110/56			
Storage Conditions	Storage time: ≤ 24 months from the date marked on the label package Average relative humidity per year ≤ 70% RH ≤ 85% for 30 days randomly distributed throughout the year Dew is absent Temperature: −40 to 80°C (see "Maximum Humidity in Storage Conditions" graph below)			
Approvals	ENEC, UL, cUL, CQC			
Dissipation Factor	Maximum Values at +23°C			
		C ≤ 0.1µF	C > 0.1µF	
	1 kHz	0.3%	0.2%	
Test Voltage Between Terminals	The 100% screening factory test is carried out at 2,500 VDC. The voltage level is selected to meet the requirements in applicable equipment standards. All electrical characteristics are checked after the test. It's not permitted to repeat this Test as there is a risk to damage the Capacitor. KEMET is not liable in such case for any failures.			
Insulation Resistance	Measured at +25°C ±5°C, according to IEC 60384-2			
	Minimum Values Between Terminals			
	Voltage Charge	Voltage Charge time	C ≤ 0.33 µF	C > 0.33 µF
	100 VDC	1 minute	≥ 3 • 10⁴ MΩ	≥ 10,000 MΩ • µF
In DC Applications	Recommended voltage ≤ 800 VDC			

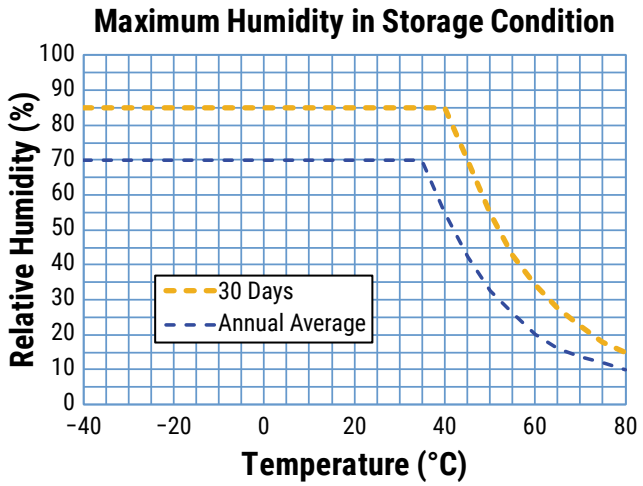

Downloaded from Arrow.com.

Impedance Graph

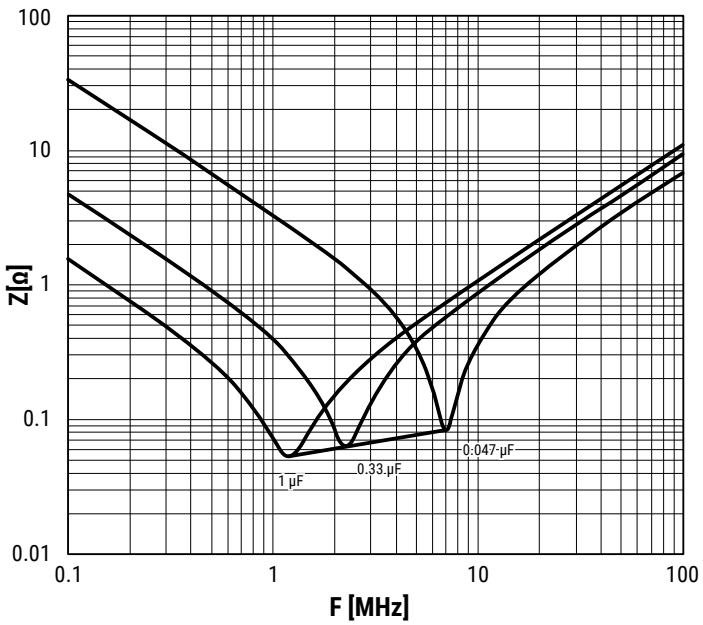

Environmental Test Data

Test	IEC Publication	Procedure
Endurance	IEC 60384–14	1.25 x V_R VAC 50 Hz, once every hour increase to 1,000 VAC for 0.1 second, 1,000 hours at upper rated temperature
Vibration	IEC 60068–2–6 Test Fc	3 directions at 2 hours each 10 – 55 Hz at 0.75 mm or 98 m/s^2
Bump	IEC 60068–2–29 Test Eb	1,000 bumps at 390 m/s^2
Change of Temperature	IEC 60068–2–14 Test Na	Upper and lower rated temperature 5 cycles
Active Flammability	IEC 60384–14	V_R +20 surge pulses at 4 kV (pulse every 5 seconds)
Passive Flammability	IEC 60384–14	IEC 60384–1, IEC 60695–11–5 Needle–flame test
Damp Heat Steady State	IEC 60068-2-78 Test Cab	+40°C and 93% R.H., 56 days
Biased Humidity	IEC 60384-14:2023 Edition 5	+40°C and 93% R.H., Rated Voltage, 21 days

Downloaded from Arrow.com.

Approvals

Certification Body	Mark	Specification	File Number
IMQ S.p.A.		EN/IEC 60384-14	CA08.00186
UL		UL 60384-14 and CAN/CSA-E60384-14	E97797
CQC		IEC 60384-14	CQC12001084008 CQC12001084009 CQC12001084010 CQC12001084012 CQC12001086290

Environmental Compliance

All new KEMET EMI capacitors are RoHS compliant and Halogen-Free.

Downloaded from Arrow.com.

Table 1 – Ratings & Part Number Reference

Capacitance Value (µF)	Size Code	Maximum Dimensions in mm			Lead Spacing (S)	dV/dt (V/µs)	Part Number
		T	H	L			
0.001	AE	4	8	13	10	500	F871AE102(1)330(2)
0.0012	AE	4	8	13	10	500	F871AE122(1)330(2)
0.0015	AE	4	8	13	10	500	F871AE152(1)330(2)
0.0018	AE	4	8	13	10	500	F871AE182(1)330(2)
0.0018	AL	9.5	7.5	13	10	500	F871AL182(1)330(2)
0.0022	AE	4	8	13	10	500	F871AE222(1)330(2)
0.0022	AL	9.5	7.5	13	10	500	F871AL222(1)330(2)
0.0025	AE	4	8	13	10	500	F871AE252(1)330(2)
0.0025	AL	9.5	7.5	13	10	500	F871AL252(1)330(2)
0.0027	AE	4	8	13	10	500	F871AE272(1)330(2)
0.0027	AL	9.5	7.5	13	10	500	F871AL272(1)330(2)
0.0033	AE	4	8	13	10	500	F871AE332(1)330(2)
0.0033	AL	9.5	7.5	13	10	500	F871AL332(1)330(2)
0.0039	AE	4	8	13	10	500	F871AE392(1)330(2)
0.0039	AL	9.5	7.5	13	10	500	F871AL392(1)330(2)
0.0047	AE	4	8	13	10	500	F871AE472(1)330(2)
0.0047	AL	9.5	7.5	13	10	500	F871AL472(1)330(2)
0.0056	AE	4	8	13	10	500	F871AE562(1)330(2)
0.0056	AL	9.5	7.5	13	10	500	F871AL562(1)330(2)
0.0068	AE	4	8	13	10	500	F871AE682(1)330(2)
0.0068	AL	9.5	7.5	13	10	500	F871AL682(1)330(2)
0.0082	AE	4	8	13	10	500	F871AE822(1)330(2)
0.0082	AL	9.5	7.5	13	10	500	F871AL822(1)330(2)
0.01	AE	4	8	13	10	500	F871AE103(3)330(2)
0.01	AG	4	9	13	10	500	F871AG103(1)330(2)
0.01	AL	9.5	7.5	13	10	500	F871AL103(1)330(2)
0.012	AG	4	9	13	10	500	F871AG123(1)330(2)
0.012	AL	9.5	7.5	13	10	500	F871AL123(1)330(2)
0.015	AK	5	11	13	10	500	F871AK153(1)330(2)
0.015	AL	9.5	7.5	13	10	500	F871AL153(1)330(2)
0.018	AK	5	11	13	10	500	F871AK183(1)330(2)
0.018	AL	9.5	7.5	13	10	500	F871AL183(1)330(2)
0.022	AK	5	11	13	10	500	F871AK223(3)330(2)
0.022	AL	9.5	7.5	13	10	500	F871AL223(1)330(2)
0.022	AP	6	12	13	10	500	F871AP223(1)330(2)
0.025	AL	9.5	7.5	13	10	500	F871AL253(1)330(2)
0.025	AP	6	12	13	10	500	F871AP253(1)330(2)
0.027	AL	9.5	7.5	13	10	500	F871AL273(1)330(2)
0.027	AP	6	12	13	10	500	F871AP273(1)330(2)
0.033	AO	7	17	13	10	500	F871AO333(1)330(2)
0.033	AP	6	12	13	10	500	F871AP333(3)330(2)
0.035	AO	7	17	13	10	500	F871AO353(1)330(2)
0.039	AO	7	17	13	10	500	F871AO393(1)330(2)
0.047	AO	7	17	13	10	500	F871AO473(3)330(2)
0.0027	BB	4	10	18	15	400	F871BB272(1)330(2)
Capacitance Value (µF)	**Size Code**	**T (mm)**	**H (mm)**	**L (mm)**	**Lead Spacing (S)**	**dV/dt (V/µs)**	**Part Number**

(1) M = ±20%, K = ±10%.
(2) Insert lead and packaging code. See table for available options.
(3) M = ±20% (only available tolerance).

Downloaded from Arrow.com.

Table 1 – Ratings & Part Number Reference cont.

Capacitance Value (µF)	Size Code	Maximum Dimensions in mm			Lead Spacing (S)	dV/dt (V/µs)	Part Number
		T	H	L			
0.0033	BB	4	10	18	15	400	F871BB332(1)330(2)
0.0039	BB	4	10	18	15	400	F871BB392(1)330(2)
0.0047	BB	4	10	18	15	400	F871BB472(1)330(2)
0.0056	BB	4	10	18	15	400	F871BB562(1)330(2)
0.0068	BB	4	10	18	15	400	F871BB682(1)330(2)
0.0082	BB	4	10	18	15	400	F871BB822(1)330(2)
0.01	BB	4	10	18	15	400	F871BB103(1)330(2)
0.012	BB	4	10	18	15	400	F871BB123(1)330(2)
0.015	BB	4	10	18	15	400	F871BB153(1)330(2)
0.018	BB	4	10	18	15	400	F871BB183(1)330(2)
0.022	BB	4	10	18	15	400	F871BB223(1)330(2)
0.025	BB	4	10	18	15	400	F871BB253(1)330(2)
0.027	BB	4	10	18	15	400	F871BB273(1)330(2)
0.033	BB	4	10	18	15	400	F871BB333(3)330(2)
0.033	BC	5	11	18	15	400	F871BC333(1)330(2)
0.039	BC	5	11	18	15	400	F871BC393(1)330(2)
0.047	BC	5	11	18	15	400	F871BC473(3)330(2)
0.047	BE	5.5	12.5	18	15	400	F871BE473(1)330(2)
0.056	BE	5.5	12.5	18	15	400	F871BE563(1)330(2)
0.068	BE	5.5	12.5	18	15	400	F871BE683(3)330(2)
0.068	BG	6	12	18	15	400	F871BG683(1)330(2)
0.082	BI	6	17.5	18	15	400	F871BI823(1)330(2)
0.082	BK	7.5	13.5	18	15	400	F871BK823(1)330(2)
0.082	BR	13	12	18	15	400	F871BR823(1)330(2)
0.082	BT	9	12.5	18	15	400	F871BT823(1)330(2)
0.1	BI	6	17.5	18	15	400	F871BI104(1)330(2)
0.1	BK	7.5	13.5	18	15	400	F871BK104(1)330(2)
0.1	BR	13	12	18	15	400	F871BR104(1)330(2)
0.1	BT	9	12.5	18	15	400	F871BT104(1)330(2)
0.12	BI	6	17.5	18	15	400	F871BI124(1)330(2)
0.12	BK	7.5	13.5	18	15	400	F871BK124(3)330(2)
0.12	BP	8.5	14.5	18	15	400	F871BP124(1)330(2)
0.12	BR	13	12	18	15	400	F871BR124(1)330(2)
0.12	BT	9	12.5	18	15	400	F871BT124(3)330(2)
0.15	BO	7.5	18.5	18	15	400	F871BO154(1)330(2)
0.15	BP	8.5	14.5	18	15	400	F871BP154(3)330(2)
0.15	BR	13	12	18	15	400	F871BR154(1)330(2)
0.18	BO	7.5	18.5	18	15	400	F871BO184(3)330(2)
0.18	BR	13	12	18	15	400	F871BR184(1)330(2)
0.18	BS	10	16	18	15	400	F871BS184(1)330(2)
0.22	BY	11	19	18	15	400	F871BY224(1)330(2)
0.25	BY	11	19	18	15	400	F871BY254(3)330(2)
0.25	BZ	12	20	18	15	400	F871BZ254(1)330(2)
0.27	BY	11	19	18	15	400	F871BY274(3)330(2)
0.27	BZ	12	20	18	15	400	F871BZ274(1)330(2)
Capacitance Value (µF)	**Size Code**	**T (mm)**	**H (mm)**	**L (mm)**	**Lead Spacing (S)**	**dV/dt (V/µs)**	**Part Number**

(1) M = ±20%, K = ±10%.
(2) Insert lead and packaging code. See table for available options.
(3) M = ±20% (only available tolerance).

Downloaded from Arrow.com.

Table 1 – Ratings & Part Number Reference cont.

Capacitance Value (µF)	Size Code	Maximum Dimensions in mm			Lead Spacing (S)	dV/dt (V/µs)	Part Number
		T	H	L			
0.039	DB	6	14.5	26	22.5	200	F871DB393(1)330(2)
0.047	DB	6	14.5	26	22.5	200	F871DB473(1)330(2)
0.056	DB	6	14.5	26	22.5	200	F871DB563(1)330(2)
0.068	DB	6	14.5	26	22.5	200	F871DB683(1)330(2)
0.082	DB	6	14.5	26	22.5	200	F871DB823(1)330(2)
0.1	DB	6	14.5	26	22.5	200	F871DB104(1)330(2)
0.12	DB	6	14.5	26	22.5	200	F871DB124(1)330(2)
0.15	DB	6	14.5	26	22.5	200	F871DB154(3)330(2)
0.15	DI	7	16	26	22.5	200	F871DI154(1)330(2)
0.18	DI	7	16	26	22.5	200	F871DI184(1)330(2)
0.22	DI	7	16	26	22.5	200	F871DI224(1)330(2)
0.25	DH	8	16	26	22.5	200	F871DH254(1)330(2)
0.27	DH	8	16	26	22.5	200	F871DH274(3)330(2)
0.33	DJ	8.5	17	26	22.5	200	F871DJ334(3)330(2)
0.33	DM	9	18.5	26	22.5	200	F871DM334(1)330(2)
0.39	DM	9	18.5	26	22.5	200	F871DM394(3)330(2)
0.39	DO	10	18.5	26	22.5	200	F871DO394(1)330(2)
0.47	DO	10	18.5	26	22.5	200	F871DO474(3)330(2)
0.47	DP	11	20	26	22.5	200	F871DP474(1)330(2)
0.56	DP	11	20	26	22.5	200	F871DP564(3)330(2)
0.68	DU	13	22	26	22.5	200	F871DU684(1)330(2)
0.82	DU	13	22	26	22.5	200	F871DU824(3)330(2)
0.82	DY	15.5	24.5	26	22.5	200	F871DY824(1)330(2)
1	DY	15.5	24.5	26	22.5	200	F871DY105(1)330(2)
0.15	FC	11	20	31.5	27.5	150	F871FC154(1)330(2)
0.18	FC	11	20	31.5	27.5	150	F871FC184(1)330(2)
0.22	FB	9	17	31.5	27.5	150	F871FB224(1)330(2)
0.25	FB	9	17	31.5	27.5	150	F871FB254(1)330(2)
0.25	FH	21	12.5	31.5	27.5	150	F871FH254(1)330(2)
0.27	FB	9	17	31.5	27.5	150	F871FB274(1)330(2)
0.27	FH	21	12.5	31.5	27.5	150	F871FH274(1)330(2)
0.33	FB	9	17	31.5	27.5	150	F871FB334(1)330(2)
0.33	FH	21	12.5	31.5	27.5	150	F871FH334(1)330(2)
0.39	FB	9	17	31.5	27.5	150	F871FB394(1)330(2)
0.39	FH	21	12.5	31.5	27.5	150	F871FH394(1)330(2)
0.47	FC	11	20	31.5	27.5	150	F871FC474(1)330(2)
0.47	FH	21	12.5	31.5	27.5	150	F871FH474(1)330(2)
0.56	FC	11	20	31.5	27.5	150	F871FC564(1)330(2)
0.56	FH	21	12.5	31.5	27.5	150	F871FH564(1)330(2)
0.68	FC	11	20	31.5	27.5	150	F871FC684(1)330(2)
0.68	FH	21	12.5	31.5	27.5	150	F871FH684(1)330(2)
0.82	FI	13	25	31.5	27.5	150	F871FI824(1)330(2)
1	FI	13	25	31.5	27.5	150	F871FI105(1)330(2)
1.2	FN	14	28	31.5	27.5	150	F871FN125(3)330(2)
1.2	FQ	27.5	16	31.5	27.5	150	F871FQ125(1)330(2)
Capacitance Value (µF)	**Size Code**	**T (mm)**	**H (mm)**	**L (mm)**	**Lead Spacing (S)**	**dV/dt (V/µs)**	**Part Number**

(1) M = ±20%, K = ±10%.
(2) Insert lead and packaging code. See table for available options.
(3) M = ±20% (only available tolerance).

Downloaded from Arrow.com.

Table 1 – Ratings & Part Number Reference cont.

Capacitance Value (µF)	Size Code	Maximum Dimensions in mm			Lead Spacing (S)	dV/dt (V/µs)	Part Number
		T	H	L			
1.5	FR	17.5	28	31.5	27.5	150	F871FR155(1)330(2)
1.5	FT	31	19	31.5	27.5	150	F871FT155(1)330(2)
1.8	FO	17	40	31.5	27.5	150	F871FO185(1)330(2)
1.8	FR	17.5	28	31.5	27.5	150	F871FR185(3)330(2)
1.8	FS	19	29	31.5	27.5	150	F871FS185(1)330(2)
1.8	FT	31	19	31.5	27.5	150	F871FT185(1)330(2)
2.2	FO	17	40	31.5	27.5	150	F871FO225(3)330(2)
2.2	FY	22	37	31.5	27.5	150	F871FY225(1)330(2)
2.5	FY	22	37	31.5	27.5	150	F871FY255(1)330(2)
2.7	FY	22	37	31.5	27.5	150	F871FY275(1)330(2)
3.3	FY	22	37	31.5	27.5	150	F871FY335(3)330(2)
0.33	RB	11	22	41	37.5	100	F871RB334(1)330(2)
0.39	RB	11	22	41	37.5	100	F871RB394(1)330(2)
0.47	RB	11	22	41	37.5	100	F871RB474(1)330(2)
0.56	RB	11	22	41	37.5	100	F871RB564(1)330(2)
0.56	RV	24	15	41	37.5	100	F871RV564(1)330(2)
0.68	RB	11	22	41	37.5	100	F871RB684(1)330(2)
0.68	RV	24	15	41	37.5	100	F871RV684(1)330(2)
0.82	RB	11	22	41	37.5	100	F871RB824(1)330(2)
0.82	RV	24	15	41	37.5	100	F871RV824(1)330(2)
1	RB	11	22	41	37.5	100	F871RB105(1)330(2)
1	RV	24	15	41	37.5	100	F871RV105(1)330(2)
1.2	RF	13	24	41	37.5	100	F871RF125(1)330(2)
1.2	RV	24	15	41	37.5	100	F871RV125(3)330(2)
1.5	RF	13	24	41	37.5	100	F871RF155(1)330(2)
1.5	RH	15	26	41	37.5	100	F871RH155(1)330(2)
1.5	RV	24	15	41	37.5	100	F871RV155(1)330(2)
1.8	RH	15	26	41	37.5	100	F871RH185(1)330(2)
1.8	RW	24	19	41	37.5	100	F871RW185(1)330(2)
2.2	RC	16	28.5	41	37.5	100	F871RC225(1)330(2)
2.2	RW	24	19	41	37.5	100	F871RW225(3)330(2)
2.5	RD	19	32	41	37.5	100	F871RD255(1)330(2)
2.5	RW	24	19	41	37.5	100	F871RW255(3)330(2)
2.7	RD	19	32	41	37.5	100	F871RD275(1)330(2)
2.7	RW	24	19	41	37.5	100	F871RW275(3)330(2)
3.3	RD	19	32	41	37.5	100	F871RD335(1)330(2)
3.3	RP	21	38	41	37.5	100	F871RP335(1)330(2)
3.9	RP	21	38	41	37.5	100	F871RP395(1)330(2)
4.7	RP	21	38	41	37.5	100	F871RP475(1)330(2)
4.7	RO	24	44	41	37.5	100	F871RO475(1)330(2)
5.6	RO	24	44	41	37.5	100	F871RO565(1)330(2)
6.8	RO	24	44	41	37.5	100	F871RO685(3)330(2)
6.8	RU	30	45	41	37.5	100	F871RU685(1)330(2)
8.2	RU	30	45	41	37.5	100	F871RU825(3)330(2)
Capacitance Value (µF)	**Size Code**	**T (mm)**	**H (mm)**	**L (mm)**	**Lead Spacing (S)**	**dV/dt (V/µs)**	**Part Number**

(1) M = ±20%, K = ±10%.
(2) Insert lead and packaging code. See table for available options.
(3) M = ±20% (only available tolerance).

Downloaded from Arrow.com.

Soldering Process

The implementation of the RoHS directive has resulted in the selection of SnAgCu (SAC) alloys or SnCu alloys as primary solder. This has increased the liquidus temperature from that of 183ºC for SnPb eutectic alloy to 217 – 221°C for the new alloys. As a result, the heat stress to the components, even in wave soldering, has increased considerably due to higher pre-heat and wave temperatures. Polypropylene capacitors are especially sensitive to heat (the melting point of polypropylene is 160 – 170°C). Wave soldering can be destructive, especially for mechanically small polypropylene capacitors (with lead spacing of 5– 15 mm), and great care has to be taken during soldering. The recommended solder profiles from KEMET should be used. Please consult KEMET with any questions. In general, the wave soldering curve from IEC Publication 61760–1 Edition 2 serves as a solid guideline for successful soldering. Please see Figure 1.

Reflow soldering is not recommended for through-hole film capacitors. Exposing capacitors to a soldering profile in excess of the above the recommended limits may result to degradation or permanent damage to the capacitors.

Do not place the polypropylene capacitor through an adhesive curing oven to cure resin for surface mount components. Insert through-hole parts after the curing of surface mount parts. Consult KEMET to discuss the actual temperature profile in the oven, if through-hole components must pass through the adhesive curing process. A maximum two soldering cycles is recommended. Please allow time for the capacitor surface temperature to return to a normal temperature before the second soldering cycle.

Manual Soldering Recommendations

Following is the recommendation for manual soldering with a soldering iron.

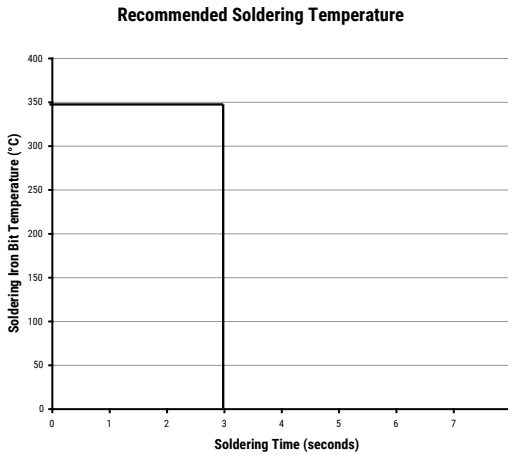

The soldering iron tip temperature should be set at 350°C (+10°C maximum), with the soldering duration not to exceed more than 3 seconds.

Wave Soldering Recommendations

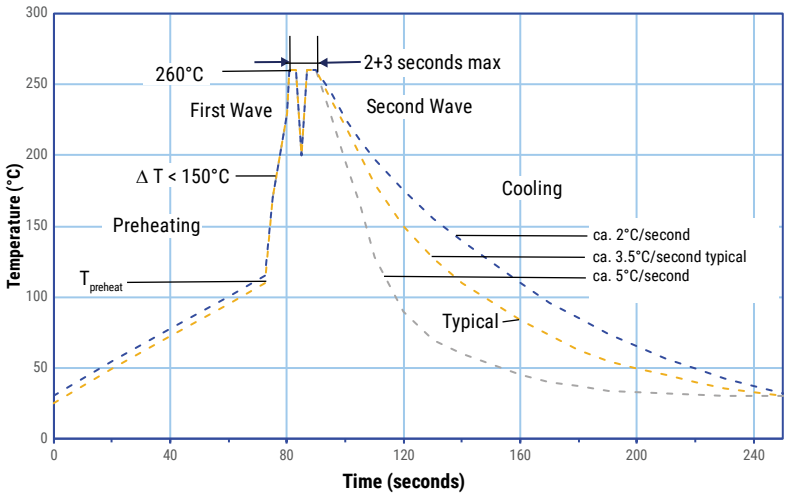

Downloaded from Arrow.com.

Soldering Process cont.

Wave Soldering Recommendations cont.

1. The table indicates the maximum set-up temperature of the soldering process
Figure 1

Dielectric Film Material	Maximum Preheat Temperature		Maximum Peak Soldering Temperature	
	Capacitor Pitch ≤ 15 mm	Capacitor Pitch > 15 mm	Capacitor Pitch ≤ 15 mm	Capacitor Pitch > 15 mm
Polyester	130°C	130°C	270°C	270°C
Polypropylene	110°C	130°C	260°C	270°C
Paper	130°C	140°C	270°C	270°C
Polyphenylene Sulphide	150°C	160°C	270°C	270°C

2. The maximum temperature measured inside the capacitor:
   Set the temperature so that inside the element the maximum temperature is below the limit:

Dielectric Film Material	Maximum temperature measured inside the element
Polyester	160°C
Polypropylene	110°C
Paper	160°C
Polyphenylene Sulphide	160°C

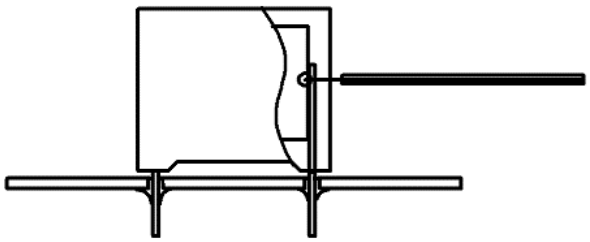

Temperature monitored inside the capacitor.

Selective Soldering Recommendations

Selective dip soldering is a variation of reflow soldering. In this method, the printed circuit board with through-hole components to be soldered is preheated and transported over the solder bath as in normal flow soldering without touching the solder. When the board is over the bath, it is stopped and pre-designed solder pots are lifted from the bath with molten solder only at the places of the selected components, and pressed against the lower surface of the board to solder the components.

The temperature profile for selective soldering is similar to the double wave flow soldering outlined in this document, **however, instead of two baths, there is only one bath with a time from 3 to 10 seconds.** In selective soldering, the risk of overheating is greater than in double wave flow soldering, and great care must be taken so that the parts are not overheated.

Downloaded from Arrow.com.

Construction

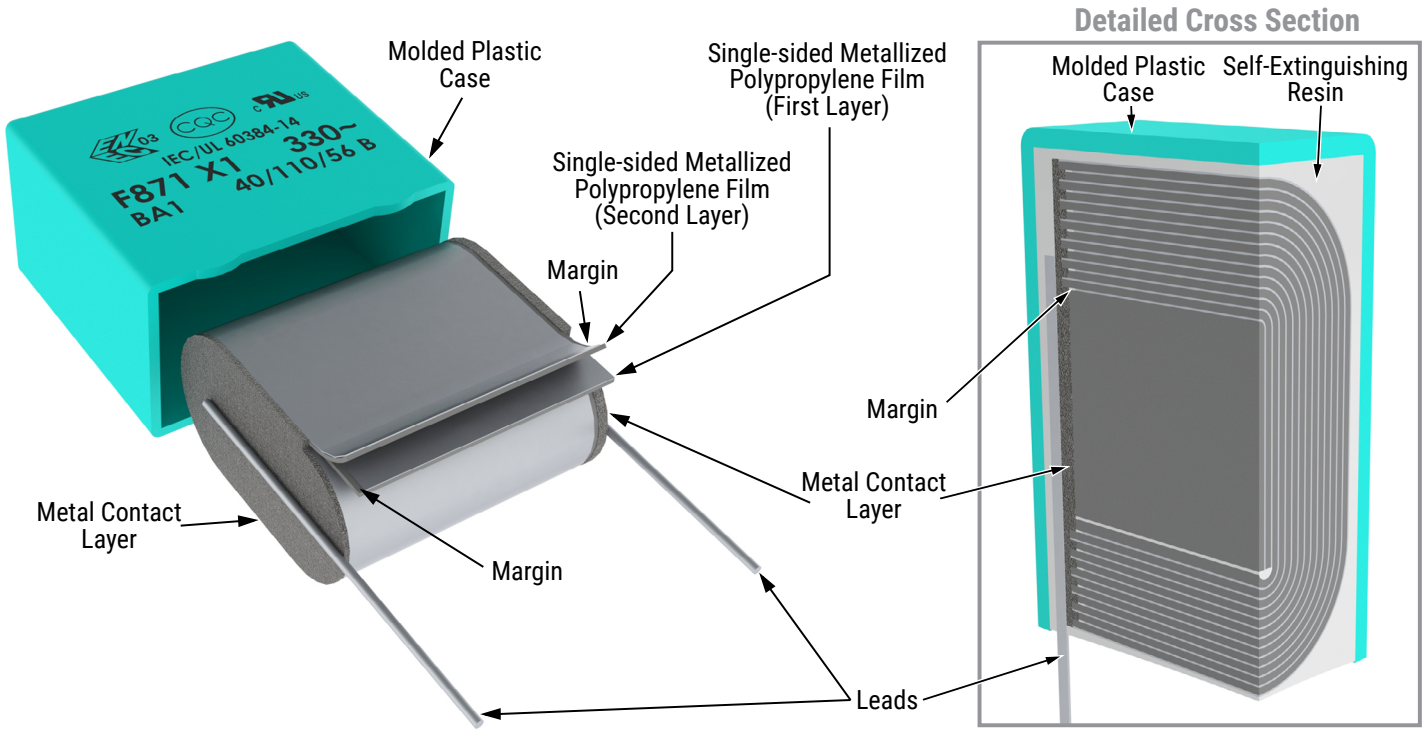

Winding Scheme

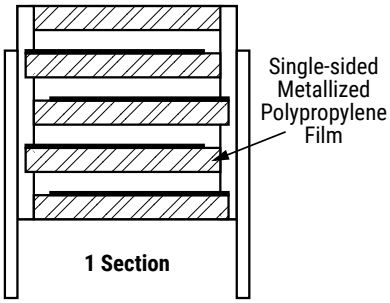

Downloaded from Arrow.com.

Marking

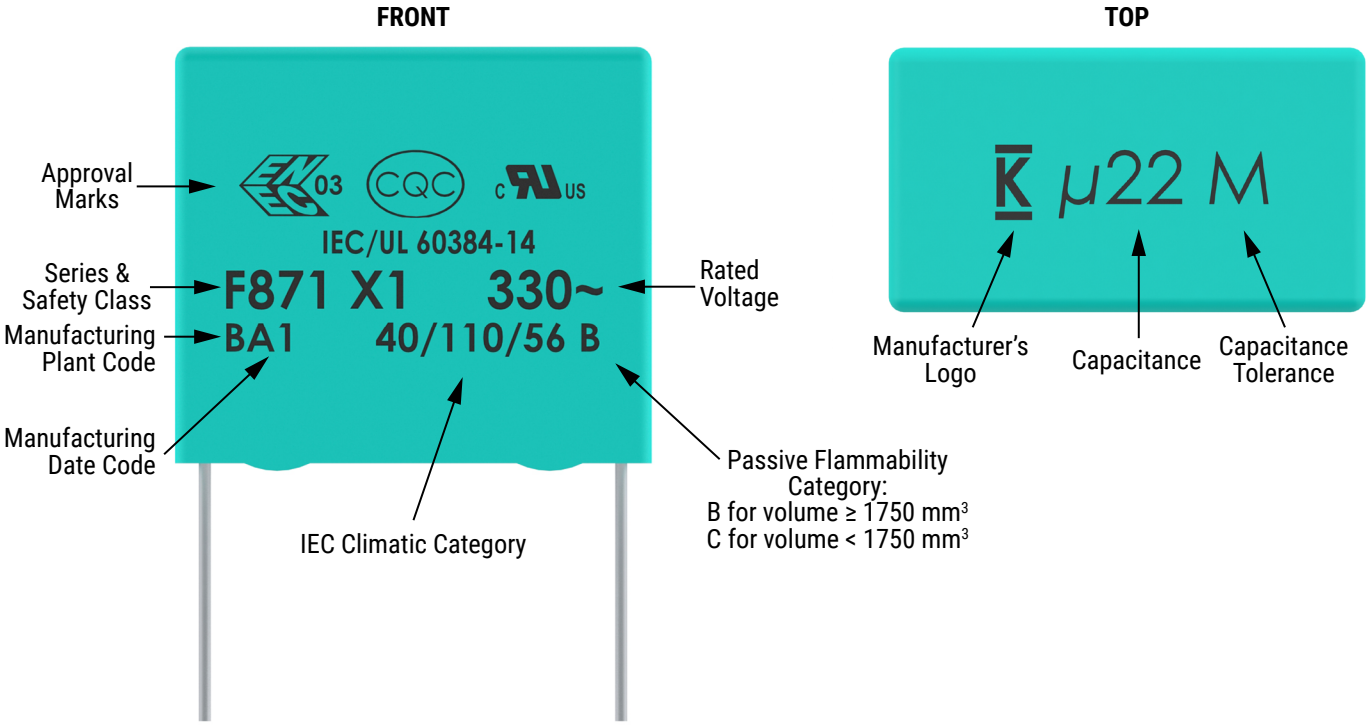

Slight change in the layout can be possible but this does not affect the content of the information of the current marking.
This change will be achieved without impact to product form, fit or function, as the products are equivalent with respect to physical, mechanical, quality and reliability characteristics

Manufacturing Date Code (IEC 60062)									
Year	Code	Year	Code	Year	Code	Month	Code	Month	Code
2020	M	2027	V	2034	E	January	1	July	7
2021	N	2028	W	2035	F	February	2	August	8
2022	P	2029	X	2036	H	March	3	September	9
2023	R	2030	A	2037	J	April	4	October	O
2024	S	2031	B	2038	K	May	5	November	N
2025	T	2032	C	2039	L	June	6	December	D
2026	U	2033	D	2040	M				

Downloaded from Arrow.com.

Packaging Quantities

Size Code	Lead Spacing	Thickness (mm)	Height (mm)	Length (mm)	Bulk Short Leads	Bulk Long Leads	Standard Reel ø 355 mm	Large Reel ø 500 mm	Ammo	Pizza
AN	10	3.5	9	13	2,200	3,200	850	1,700	1,150	
AG		4	9	13	2,000	2,200	750	1,500	1,000	
AK		5	11	13	1,300	2,000	600	1,250	800	
AP		6	12	13	1,000	1,800	500	1,000	680	
AO		7	17	13	600	900	450	900	580	
AL		9.5	7.5	13	1,100	2,000	300	600	430	
AE		4	8	13	2,000	2,200	750	1,500	1,000	
BB	15	4	10	18	1,300	1,500	750	1,500	1,000	1,411
BC		5	11	18	1,000	1,250	600	1,250	800	1,139
BE		5.5	12.5	18	800	1,100	550	1,100	750	1,020
BG		6	12	18	1,750	1,000	500	1,000	680	935
BK		7.5	13.5	18	1,000	800	350	800	500	748
BI		6	17.5	18	1,000	800	500	1,000	680	935
BP		8.5	14.5	18	1,000	650	300	700	440	663
BT		9	12.5	18	1,000	700	270	650	410	629
BO		7.5	18.5	18	900	600	350	800	500	748
BS		10	16	18	750	550	300	600	380	561
BR		13	12	18	750	520	200	480	280	425
BY		11	19	18	450	400	250	500	340	510
BA		8.5	12.5	18	1,000	650	300	700	440	663
BZ		12	20	18	350	300	220	450	330	459
DB	22.5	6	14.5	26	1,638	702	300	700	464	660
DI		7	16	26	1,188	594	250	550	380	564
DH		8.0	16.0	26	1,026	513	240	500	330	492
DJ		8.5	17	26	972	486	250	450	280	468
DM		9	18.5	26	918	459	200	400	300	444
DO		10	18.5	26	810	405	160	350	235	396
DP		11	20	26	756	378	190	350	217	360
DU		13	22	26	540	324	150	300	200	300
DY		15.5	24.5	26	450	270	120	250	170	252

Downloaded from Arrow.com.

Packaging Quantities cont.

Size Code	Lead Spacing	Thickness (mm)	Height (mm)	Length (mm)	Bulk Short Leads	Bulk Long Leads	Standard Reel ø 355 mm	Large Reel ø 500 mm	Ammo	Pizza
FB	27.5	9.0	17.0	31.5	816	408				370
FC		11.0	20.0	31.5	672	336				300
FI		13.0	25.0	31.5	480	288				250
FN		14.0	28.0	31.5	352	176				230
FO		17.0	40.0	31.5	216	144				190
FR		17.5	28.0	31.5	256	128				190
FS		19.0	29.0	31.5	256	128				170
FY		22.0	37.0	31.5	168	112				150
FH		21.0	12.5	31.5	392	168				150
FQ		27.5	16.0	31.5	280	120				120
FT		31.0	19.0	31.5	240	120				100
RB	37.5	11.0	22.0	41.0	420	252				210
RF		13.0	24.0	41.0	360	216				175
RH		15.0	26.0	41.0	300	180				154
RC		16.0	28.5	41.0	216	108				140
RD		19.0	32.0	41.0	192	96				119
RP		21.0	38.0	41.0	126	84				105
RO		24.0	44.0	41.0	108	72				91
RU		30.0	45.0	41.0	90	60				77
RV		24.0	15.0	41.0	252	108				91
RW		24.0	19.0	41.0	216	108				91

Downloaded from Arrow.com.

Lead Taping & Packaging (IEC 60286–2)

Lead Spacing 5 mm

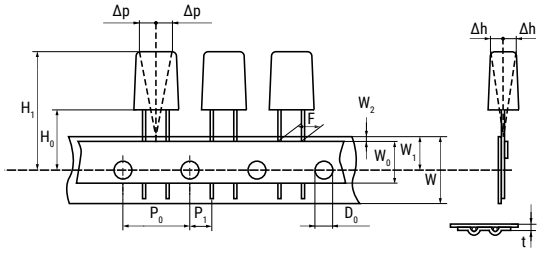

Lead Spacing 7.5 mm

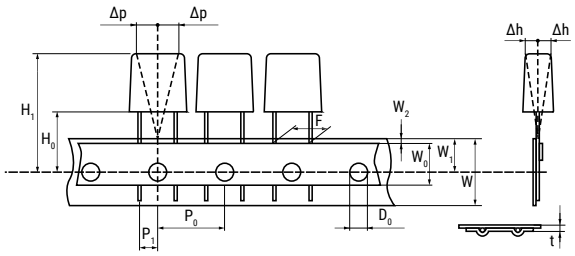

Lead Spacing 10 – 15 mm

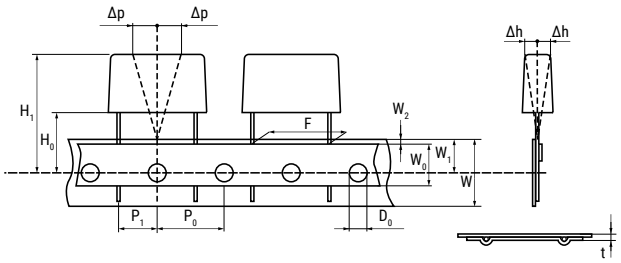

Lead Spacing 22.5 – 27.5 mm

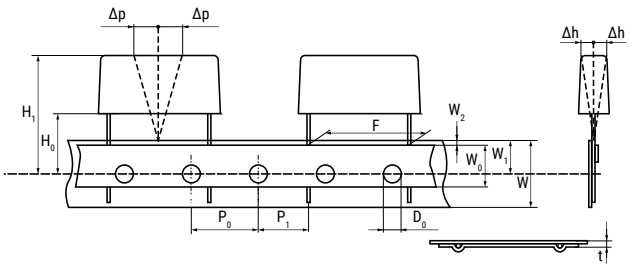

Taping Specification

Dimensions in mm									Standard IEC 60286–2
Lead Spacing	+0.6/−0.1	F	5.0	7.5	10.0	15.0	22.5	27.5	F
Carrier Tape Width	+1/−0.5	W	18.0	18.0	18.0	18.0	18.0	18.0	$18^{+1/-0.5}$
Hold-Down Tape Width	Minimum	W_0	6.0	6.0	9.0	10.0	10.0	10.0	
Position of Sprocket Hole	±0.5	W_1	9.0	9.0	9.0	9.0	9.0	9.0	$9^{+0.75/-0.5}$
Distance Between Tapes	Maximum	W_2	3.0	3.0	3.0	3.0	3.0	3.0	3.0
Sprocket Hole Diameter	±0.2	D_0	4.0	4.0	4.0	4.0	4.0	4.0	4.0
Feed Hole Lead Spacing	±0.2(1)	P_0(3)	12.7	12.7	12.7	12.7	12.7	12.7	12.7
Distance Lead – Feed Hole	±0.7	P_1	3.85	3.75	7.7	5.2	7.8	5.3	P^1
Deviation Tape – Plane	Maximum	Δp	1.3	1.3	1.3	1.3	1.3	1.3	1.3
Lateral Deviation	±2	Δh	2.0	2.0	2.0	2.0	2.0	2.0	2.0
Total Thickness	±0.2	t	0.7	0.7	0.7	0.7	0.9^{MAX}	0.9^{MAX}	0.9^{MAX}
Sprocket Hole/Cap Body	±0.5	H_0(2)	$18.5^{\pm0.5}$	$18.5^{\pm0.5}$	$18.5^{\pm0.5}$	$18.5^{\pm0.5}$	$18.5^{\pm0.5}$	$18.5^{\pm0.5}$	$18^{+2/-0}$

(1) Maximum cumulative feed hole error, 1 mm per 20 parts.
(2) 16.5 mm available on request.
(3) 15 mm available on request (F ≥ 10 mm).

Downloaded from Arrow.com.

Lead Taping & Packaging (IEC 60286–2) cont.

Ammo Specifications

Series	Dimensions (mm)		
	H	W	T
F5A, F5B, F5D	360	340	59
F6xx, F8xx			
PHExxx, PMExxx, PMRxxx	330	330	50

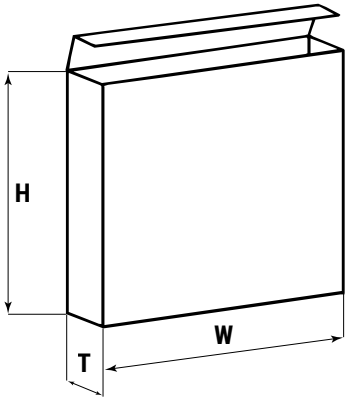

Reel Specifications

Series	Dimensions (mm)		
	D	H	W
F5A, F5B, F5D	355	30	55 (Max)
F6xx, F8xx	500	25	
PHExxx, PMExxx, PMRxxx	360 500	30	46 (Max)

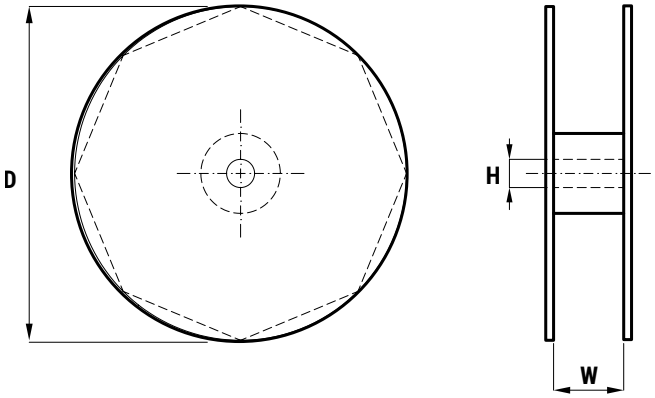

Downloaded from Arrow.com.

KEMET Electronics Corporation Sales Offices

For a complete list of our global sales offices, please visit https://www.yageogroup.com/SalesResources/SalesOffices

Disclaimer

YAGEO Corporation and its affiliates do not recommend the use of commercial or automotive grade products for high reliability applications or manned space flight.

All product specifications, statements, information and data (collectively, the "Information") in this datasheet are subject to change. The customer is responsible for checking and verifying the extent to which the Information contained in this publication is applicable to an order at the time the order is placed. All Information given herein is believed to be accurate and reliable, but it is presented without guarantee, warranty, or responsibility of any kind, expressed or implied.

Statements of suitability for certain applications are based on KEMET Electronics Corporation's ("KEMET") knowledge of typical operating conditions for such applications, but are not intended to constitute – and KEMET specifically disclaims – any warranty concerning suitability for a specific customer application or use. The Information is intended for use only by customers who have the requisite experience and capability to determine the correct products for their application. Any technical advice inferred from this Information or otherwise provided by KEMET with reference to the use of KEMET's products is given gratis, and KEMET assumes no obligation or liability for the advice given or results obtained.

Although KEMET designs and manufactures its products to the most stringent quality and safety standards, given the current state of the art, isolated component failures may still occur. Accordingly, customer applications which require a high degree of reliability or safety should employ suitable designs or other safeguards (such as installation of protective circuitry or redundancies) in order to ensure that the failure of an electrical component does not result in a risk of personal injury or property damage.

Although all product–related warnings, cautions and notes must be observed, the customer should not assume that all safety measures are indicated or that other measures may not be required.

Additional information about production site flexibility can be found <here>

KEMET is a registered trademark of KEMET Electronics Corporation.

Downloaded from Arrow.com.