# 4DLCD-24320240-IPS Series

4DLCD-24320240-IPS-RTP

4DLCD-24320240-IPS-CTP

# Datasheet

Revision 1.5

Copyright © 2025 4D Systems

Content may change at any time. Please refer to the resource centre for latest documentation.

Downloaded from Arrow.com.

# Contents


1. General Specification 4
2. TFT LCD Display Drawing (Non-Touch Version) 6
3. TFT LCD Display Drawing (Resistive Touch Version) 7
4. TFT LCD Display Drawing (Capacitive Touch Version) 8
5. Absolute Maximum Ratings 9
6. Electrical Characteristics 9
7. Electro-Optical Characteristics 10
8. Backlight Characteristics 11
9. Interface Descriptions 13
    9.1. LCD Interface 13
    9.2. CTP Interface 15
10. Backlight Example Circuit 16
11. Initialisation Code 17
12. LCD Timing Details 19
    12.1. Timing Chart 19
    12.2. Reset Timing 20
    12.3. Power On Sequence 20
        12.3.1. Case 1 - RES line is held High or Unstable by Host at Power ON 20
        12.3.2. Case 2 - RES line is held Low by Host at Power ON 21
    12.4. Power-off Sequence - Uncontrolled Power Off 21
13. Reliability Test 22
14. Precautions for Using LCD Modules 23
    14.1. Handing Precautions 23
    14.2. Storage Precautions 25
15. Revision History 26
16. Legal Notice 27
    16.1. Proprietary Information 27
    16.2. Disclaimer of Warranties & Limitations of Liabilities 27




Downloaded from Arrow.com.

Downloaded from Arrow.com.

# 1. General Specification

4DLCD-24320240-IPS is a colour active-matrix LCD module incorporating amorphous silicon TFT IPS (Thin Film Transistor). It is composed of a colour IPSTFT-LCD panel, driver IC, FPC and a backlight unit with/without a Resistive/Capacitive Touch Panel (RTP/CTP). The module display area contains 240 x 320 pixels. This product accords with RoHS environmental criteria.

**Part Number Details:**

4DLCD 4DLCD LCD Display

24320240 2.4 inches, 240 x 320 Resolution

IPS In-plane Switching

RTP Resistive touch

CTP Capacitive touch

Downloaded from Arrow.com.

## Specification

| ITEM | CONTENTS | UNIT |
|---|---|---|
| LCD Type | TFT / Transmissive / IPS | |
| Size | 2.4 | Inch |
| Viewing Direction | ALL | |
| Display Mode | Normally Black | |
| LCD (W x H ) | 42.72 x 60.26 | mm |
| Active Area (W x H) | 36.72 x 48.96 | mm |
| Dot Pitch (W x H) | 0.153 x 0.153 | mm |
| Number of Dots (Pixels) | 240 (RGB) x 320 | |
| Driver IC | ST7789V | |
| Backlight Type | 4 LEDs | |
| Surface Luminance: 4DLCD-24240320-IPS | 320 (typical) | cd/m2 |
| Surface Luminance: 4DLCD-24240320-IPS-RTP | 270 (typical) | |
| Surface Luminance: 4DLCD-24240320-IPS-CTP | 300 (typical) | |
| Interface Type | MCU-16bit/SPI | |
| Colour Depth | 262K | |
| Pixel Arrangement | RGB Vertical Stripe | |
| Surface Treatment | AG | |
| Input Voltage | 2.8 (typical) | V |
| With/Without TP (Touch Panel) | 4DLCD-24320240-IPS - Without Touch Panel | |
| | 4DLCD-24320240-IPS-RTP - With Resistive Touch | |
| | 4DLCD-24320240-IPS-CTP - With Capacitive Touch | |
| Weight: 4DLCD-24240320-IPS | 10.0 | g |
| Weight: 4DLCD-24240320-IPS-RTP | 15.2 | |
| Weight: 4DLCD-24240320-IPS-CTP | 16 | |

## Note

1. RoHS compliant
2. LCD weight tolerance: ± 5%


Downloaded from Arrow.com.

# 2. TFT LCD Display Drawing (Non-Touch Version)

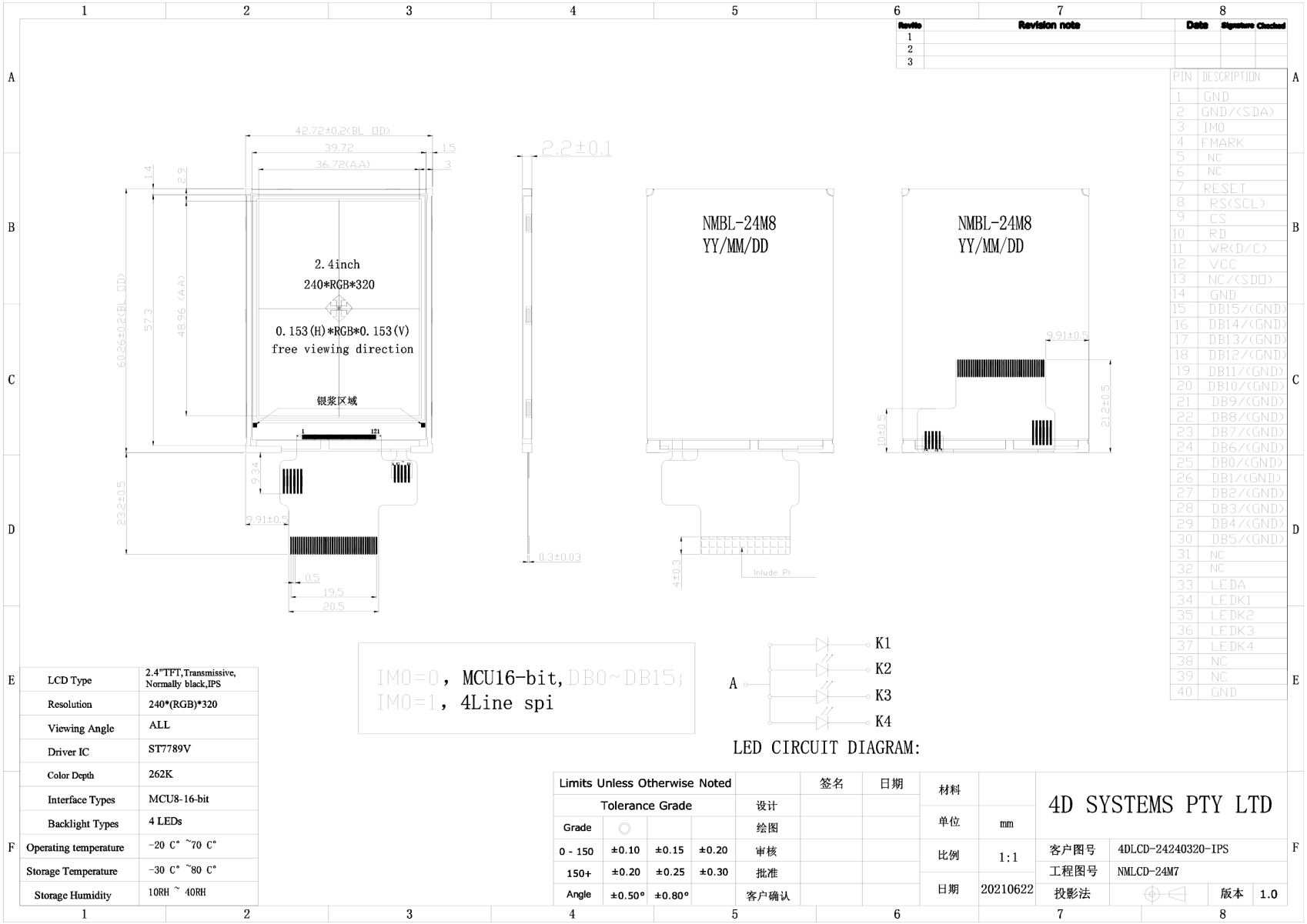


| PIN | DESCRIPTION |
|---|---|
| 1 | GND |
| 2 | GND/(SDA) |
| 3 | IM0 |
| 4 | FMARK |
| 5 | NC |
| 6 | NC |
| 7 | RESET |
| 8 | RS(SCL) |
| 9 | CS |
| 10 | RD |
| 11 | WR(D/C) |
| 12 | VCC |
| 13 | NC/(SDO) |
| 14 | GND |
| 15 | DB15/(GND) |
| 16 | DB14/(GND) |
| 17 | DB13/(GND) |
| 18 | DB12/(GND) |
| 19 | DB11/(GND) |
| 20 | DB10/(GND) |
| 21 | DB9/(GND) |
| 22 | DB8/(GND) |
| 23 | DB7/(GND) |
| 24 | DB6/(GND) |
| 25 | DB0/(GND) |
| 26 | DB1/(GND) |
| 27 | DB2/(GND) |
| 28 | DB3/(GND) |
| 29 | DB4/(GND) |
| 30 | DB5/(GND) |
| 31 | NC |
| 32 | NC |
| 33 | LEDA |
| 34 | LEDK1 |
| 35 | LEDK2 |
| 36 | LEDK3 |
| 37 | LEDK4 |
| 38 | NC |
| 39 | NC |
| 40 | GND |

| | |
|---|---|
| LCD Type | 2.4"TFT,Transmissive, Normally black,IPS |
| Resolution | 240*(RGB)*320 |
| Viewing Angle | ALL |
| Driver IC | ST7789V |
| Color Depth | 262K |
| Interface Types | MCU8-16-bit |
| Backlight Types | 4 LEDs |
| Operating temperature | -20 C° ~70 C° |
| Storage Temperature | -30 C° ~80 C° |
| Storage Humidity | 10RH ~ 40RH |



Downloaded from Arrow.com.

# 3. TFT LCD Display Drawing (Resistive Touch Version)

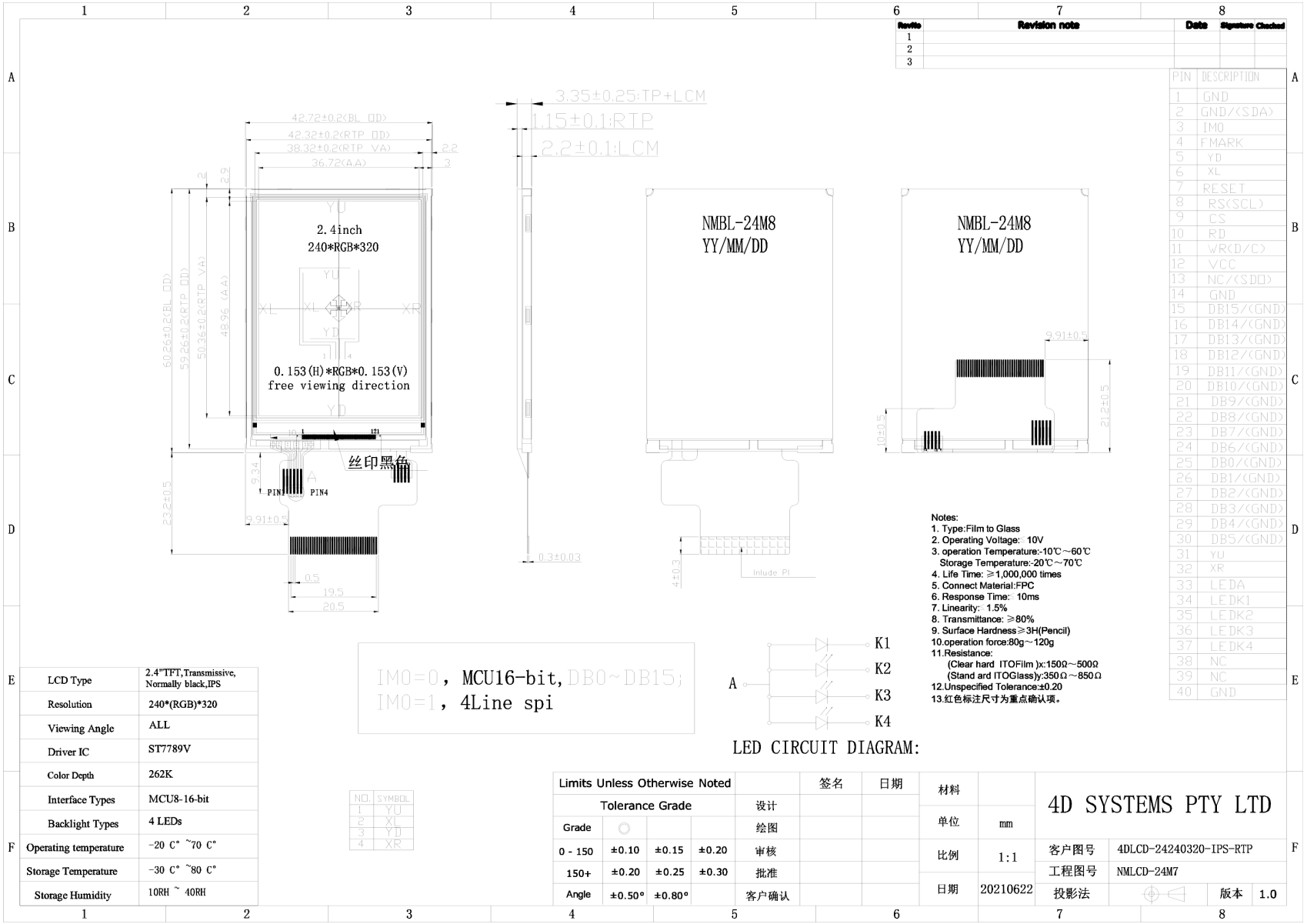


| PIN | DESCRIPTION |
|---|---|
| 1 | GND |
| 2 | GND/(SDA) |
| 3 | IM0 |
| 4 | FMARK |
| 5 | YD |
| 6 | XL |
| 7 | RESET |
| 8 | RS(SCL) |
| 9 | CS |
| 10 | RD |
| 11 | WR(D/C) |
| 12 | VCC |
| 13 | NC/(SDO) |
| 14 | GND |
| 15 | DB15/(GND) |
| 16 | DB14/(GND) |
| 17 | DB13/(GND) |
| 18 | DB12/(GND) |
| 19 | DB11/(GND) |
| 20 | DB10/(GND) |
| 21 | DB9/(GND) |
| 22 | DB8/(GND) |
| 23 | DB7/(GND) |
| 24 | DB6/(GND) |
| 25 | DB0/(GND) |
| 26 | DB1/(GND) |
| 27 | DB2/(GND) |
| 28 | DB3/(GND) |
| 29 | DB4/(GND) |
| 30 | DB5/(GND) |
| 31 | YU |
| 32 | XR |
| 33 | LEDA |
| 34 | LEDK1 |
| 35 | LEDK2 |
| 36 | LEDK3 |
| 37 | LEDK4 |
| 38 | NC |
| 39 | NC |
| 40 | GND |

| | |
|---|---|
| LCD Type | 2.4"TFT,Transmissive, Normally black,IPS |
| Resolution | 240*(RGB)*320 |
| Viewing Angle | ALL |
| Driver IC | ST7789V |
| Color Depth | 262K |
| Interface Types | MCU8-16-bit |
| Backlight Types | 4 LEDs |
| Operating temperature | -20 C° ~70 C° |
| Storage Temperature | -30 C° ~80 C° |
| Storage Humidity | 10RH ~ 40RH |

| NO. | SYMBOL |
|---|---|
| 1 | YU |
| 2 | XL |
| 3 | YD |
| 4 | XR |

| Limits Unless Otherwise Noted | | | | | 签名 | 日期 |
|---|---|---|---|---|---|---|
| Tolerance Grade | | | | 设计 | | |
| Grade | | | | 绘图 | | |
| 0 - 150 | ±0.10 | ±0.15 | ±0.20 | 审核 | | |
| 150+ | ±0.20 | ±0.25 | ±0.30 | 批准 | | |
| Angle | ±0.50° | ±0.80° | | 客户确认 | | |

| | |
|---|---|
| 材料 | |
| 单位 | mm |
| 比例 | 1:1 |
| 日期 | 20210622 |
| 投影法 | |



Downloaded from Arrow.com.

# 4. TFT LCD Display Drawing (Capacitive Touch Version)

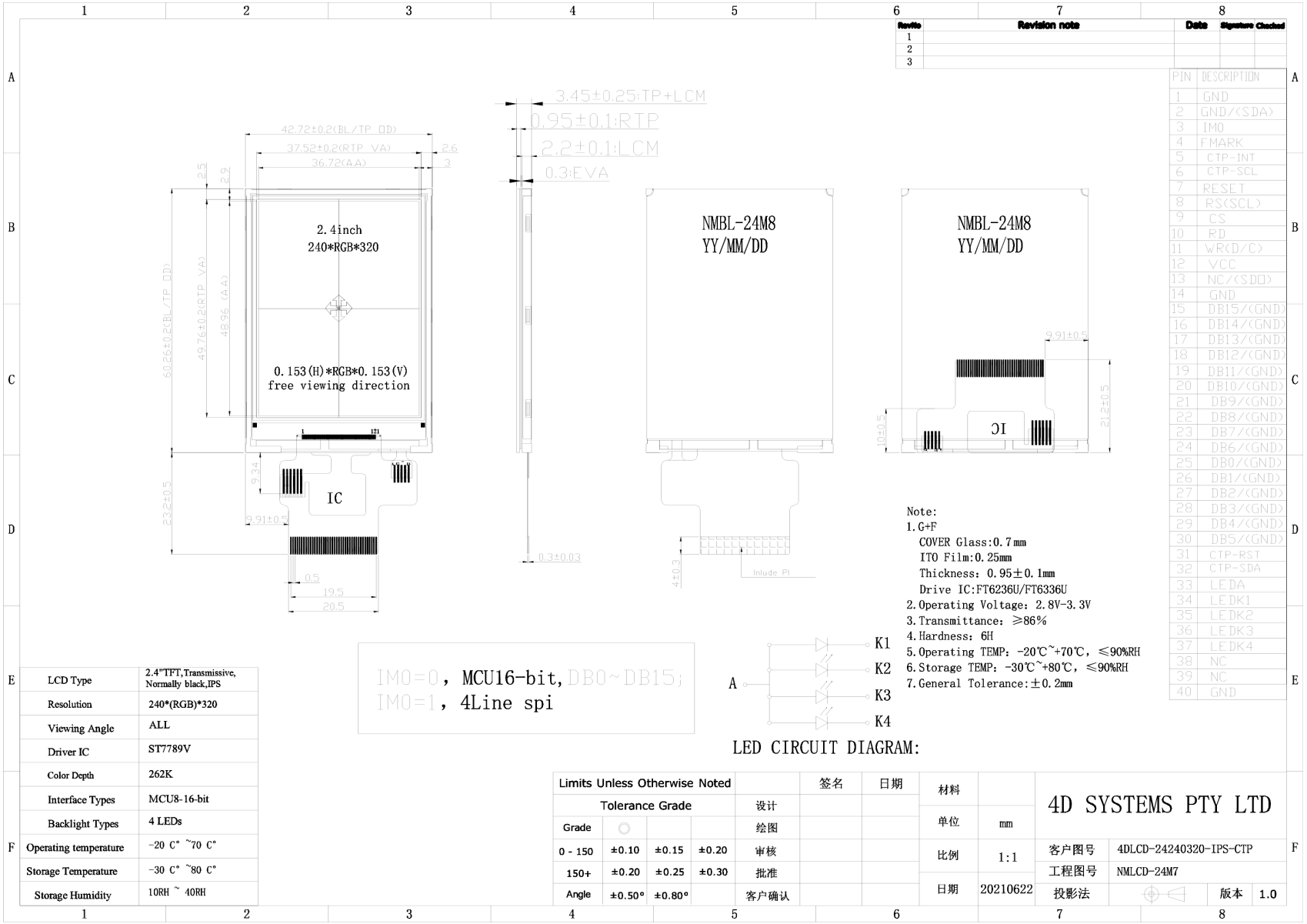


| PIN | DESCRIPTION |
|---|---|
| 1 | GND |
| 2 | GND/(SDA) |
| 3 | IM0 |
| 4 | FMARK |
| 5 | CTP-INT |
| 6 | CTP-SCL |
| 7 | RESET |
| 8 | RS(SCL) |
| 9 | CS |
| 10 | RD |
| 11 | WR(D/C) |
| 12 | VCC |
| 13 | NC/(SDO) |
| 14 | GND |
| 15 | DB15/(GND) |
| 16 | DB14/(GND) |
| 17 | DB13/(GND) |
| 18 | DB12/(GND) |
| 19 | DB11/(GND) |
| 20 | DB10/(GND) |
| 21 | DB9/(GND) |
| 22 | DB8/(GND) |
| 23 | DB7/(GND) |
| 24 | DB6/(GND) |
| 25 | DB0/(GND) |
| 26 | DB1/(GND) |
| 27 | DB2/(GND) |
| 28 | DB3/(GND) |
| 29 | DB4/(GND) |
| 30 | DB5/(GND) |
| 31 | CTP-RST |
| 32 | CTP-SDA |
| 33 | LEDA |
| 34 | LEDK1 |
| 35 | LEDK2 |
| 36 | LEDK3 |
| 37 | LEDK4 |
| 38 | NC |
| 39 | NC |
| 40 | GND |

| | |
|---|---|
| LCD Type | 2.4"TFT,Transmissive, Normally black,IPS |
| Resolution | 240*(RGB)*320 |
| Viewing Angle | ALL |
| Driver IC | ST7789V |
| Color Depth | 262K |
| Interface Types | MCU8-16-bit |
| Backlight Types | 4 LEDs |
| Operating temperature | -20 C° ~70 C° |
| Storage Temperature | -30 C° ~80 C° |
| Storage Humidity | 10RH ~ 40RH |

| Limits Unless Otherwise Noted | | | | | 签名 | 日期 |
|---|---|---|---|---|---|---|
| Tolerance Grade | | | | 设计 | | |
| Grade | | | | 绘图 | | |
| 0 - 150 | ±0.10 | ±0.15 | ±0.20 | 审核 | | |
| 150+ | ±0.20 | ±0.25 | ±0.30 | 批准 | | |
| Angle | ±0.50° | ±0.80° | | 客户确认 | | |

| | |
|---|---|
| 材料 | |
| 单位 | mm |
| 比例 | 1:1 |
| 日期 | 20210622 |
| 客户图号 | 4DLCD-24240320-IPS-CTP |
| 工程图号 | NMLCD-24M7 |
| 投影法 | |
| 版本 | 1.0 |



Downloaded from Arrow.com.

## 5. Absolute Maximum Ratings

**Absolute Maximum Ratings**

| PARAMETER | SYMBOL | MIN | MAX | UNIT |
|---|---|---|---|---|
| Supply Voltage for LCD Logic | VDD/VCC | -0.3 | 4.6 | V |
| Input Voltage for Logic | VIN | VSS-0.5 | VDD | V |
| LED forward current (each LED) | IF | - | 25 | mA |
| Operating Temperature | TOP | -20 | 70 | °C |
| Storage Temperature | TST | -30 | 80 | °C |
| Humidity | RH | - | 90% (Max 60°C) | RH |

## 6. Electrical Characteristics

**Electrical Characteristics**

| PARAMETER | SYMBOL | MIN | TYP | MAX | UNIT |
|---|---|---|---|---|---|
| Power Voltage (Logic) | VDD/DCC | 2.6 | 2.8 | 3.3 | V |
| Input Current (Logic) | IVDD | - | 13 | - | mA |
| Input Voltage 'H' Level | VIH | 0.7 VDD | - | VDD | V |
| Input Voltage 'L' Level | VIL | 0 | - | 0.3 VDD | V |


Downloaded from Arrow.com.

# 7. Electro-Optical Characteristics

**Electro-Optical Characteristics**

| ITEM | SYM | CONDITION | MIN | TYP | MAX | UNIT | REMARK |
|---|---|---|---|---|---|---|---|
| Response Time | Tr+Tf | θ=0 | - | 19 | - | ms | Figure 1(4) |
| Contrast Ratio | Cr | ° | - | 800 | - | - | Figure 2(1) |
| Luminance Uniformity | δ WHITE | ∅=0 | - | 70 | - | % | Figure 2(3) |
| Surface Luminance | Lv | 4DLCD-24320240-IPS | - | 320 | - | cd/ m2 | Figure 2(2) |
| | | 4DLCD-24320240-IPS-RTP | - | 270 | - | | |
| | | 4DLCD-24320240-IPS-CTP | - | 300 | - | | |
| Viewing Angle Range | θ | ∅ = 90° | - | 80 | - | deg | Figure 3(6) |
| | | ∅ = 270° | - | 80 | - | deg | |
| | | ∅ = 0° | - | 80 | - | deg | |
| | | ∅ = 180° | - | 80 | - | deg | |
| CIE (x,y) Cromacity - Red | x | | | 0.647 | | | |
| | y | | | 0.317 | | | |
| CIE (x,y) Cromacity - Green | x | θ=0° | | 0.275 | | | |
| | y | ∅=0° | -0.02 | 0.582 | +0.02 | | Figure 2(5) |
| CIE (x,y) Cromacity - Blue | x | Ta=25 | | 0.140 | | | |
| | y | | | 0.088 | | | |
| CIE (x,y) Cromacity - White | x | | | 0.310 | | | |
| | y | | | 0.336 | | | |


Downloaded from Arrow.com.

# 8. Backlight Characteristics

**Backlight Characteristics**

| PARAMETER | SYMBOL | MIN | TYP | MAX | UNIT |
|---|---|---|---|---|---|
| Voltage for LED backlight (Each LED) | VI | - | 3.2 | 3.4 | V |
| Current for LED backlight (Each LED) | II-each | - | 20 | 25 | mA |
| Current for LED backlight (Total - 4 LEDS) | II | - | 80 | 100 | mA |
| LED Lifetime (50% of original brightness) | - | 30000 | - | - | Hrs |

**Note**

The LED lifetime is defined as the module brightness decreasing to 50% original brightness at Ta=25°C.

1. Contrast Ratio(CR) is defined mathematically as below, for more information see Figure 1.

$$\text{Contrast Ratio} = \frac{\text{Average Surface Luminance with all white pixels (P1, P2, P3, P4, P5)}}{\text{Average Surface Luminance with all black pixels (P1, P2, P3, P4, P5)}}$$

2. Surface luminance is the LCD surface from the surface with all pixels displaying white. For more information, see Figure 2.

$$Lv = \text{Average Surface Luminance with all white pixels (P1, P2, P3, P4, P5)}$$

3. The uniformity in surface luminance δ WHITE is determined by measuring luminance at each test position 1 through 5, and then dividing the maximum luminance of 5 points luminance by the minimum luminance of 5 points luminance. For more information, see Figure 2.

$$\delta\text{WHITE} = \frac{\text{Minimum Surface Luminance with all white pixels (P1, P2, P3, P4, P5)}}{\text{Maximum Surface Luminance with all white pixels (P1, P2, P3, P4, P5)}}$$

4. Response time is the time required for the display to transition from white to black (Rise Time, Tr) and from black to white (Decay Time, Tf). For additional information see Figure 1. The test equipment is the Autronic-Melchers ConoScope series.
5. CIE (x, y) chromaticity, the x and y value is determined by measuring luminance at each test position 1 through 5, and then making the average value.
6. Viewing angle is the angle at which the contrast ratio is greater than 2. For the TFT module, the contrast ratio is greater than 10. The angles are determined for the horizontal or x-axis and the vertical or y-axis to the z-axis which is normal to the LCD surface. For more information, see Figure 3.
7. For viewing angle and response time testing, the testing data is based on the Autronic-Melchers ConoScope series. Instruments for Contrast Ratio, Surface Luminance, Luminance Uniformity, and CIE the test data is based on TOPCONs BM-5 photodetector.

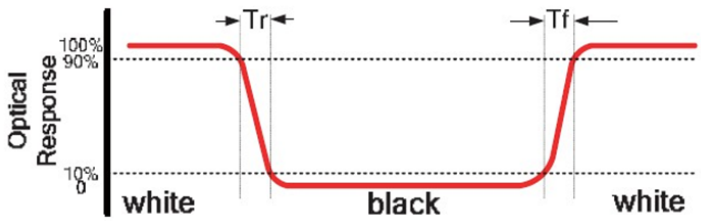


*The definition of response time*


Downloaded from Arrow.com.

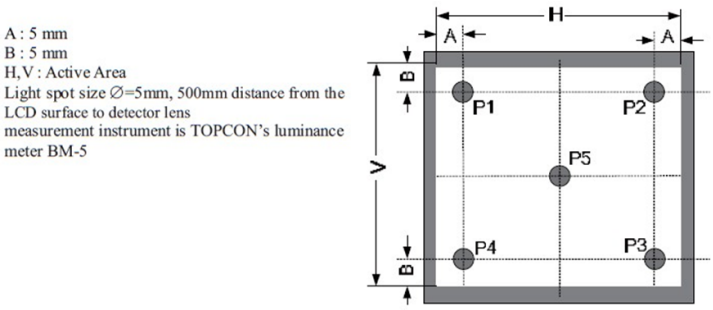


*Measuring method for Contrast ratio, surface luminance, Luminance uniformity, CIE (x, y) chromaticity*

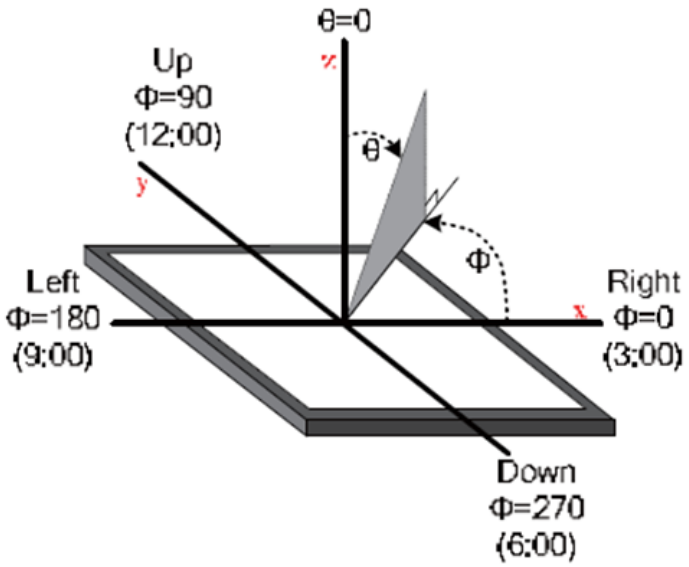


*The definition of viewing angle*


Downloaded from Arrow.com.

# 9. Interface Descriptions

## 9.1. LCD Interface

| PIN NO. | SYMBOL | DESCRIPTION | REMARK |
|---|---|---|---|
| 1 | GND | Ground | |
| 2 | GND/(SDI) | Ground for MCU mode/ Serial Data Input signal for SPI mode | |
| 3 | MODE | MCU-16bit /SPI mode selection pin | Note 1 |
| 4 | FMARK | Tearing effect output signal | |
| 5 | YD/ CTP_INT | The touch panel Y bottom pin for RTP / Interrupt signal from CTP/No Connection (NC) for Non touch Version | Note 3 |
| 6 | XL/ CTP_SCL | The touch panel X left pin for RTP/ I2C SCL for CTP / No Connection (NC) for Non touch Version | Note 3 |
| 7 | RESET | Reset input signal | |
| 8 | RS/SCL | Instruction Register/Data Register selection pin for MCU mode / SPI Serial Clock for SPI mode | |
| 9 | CS | Chip select input pin | |
| 10 | RD/(VCC) | Read signal for MCU mode / Tie to VCC for SPI mode | |
| 11 | WR/(D/C) | Write signal for MCU mode / Data or Command selection for SPI mode | |
| 12 | VCC | Power supply (Logic) | |
| 13 | NC/(SDO) | No Connect for MCU mode / Serial Data Output for SPI mode | |
| 14 | GND | Ground | |
| 15 | DB15/(GND) | Databus DB15 for MCU mode / Tie to GND for SPI mode | Note 2 |
| 16 | DB14/(GND) | Databus DB14 for MCU mode / Tie to GND for SPI mode | Note 2 |
| 17 | DB13/(GND) | Databus DB13 for MCU mode / Tie to GND for SPI mode | Note 2 |
| 18 | DB12/(GND) | Databus DB12 for MCU mode / Tie to GND for SPI mode | Note 2 |
| 19 | DB11/(GND) | Databus DB11 for MCU mode / Tie to GND for SPI mode | Note 2 |
| 20 | DB10/(GND) | Databus DB10 for MCU mode / Tie to GND for SPI mode | Note 2 |
| 21 | DB9/(GND) | Databus DB9 for MCU mode / Tie to GND for SPI mode | Note 2 |
| 22 | DB8/(GND) | Databus DB8 for MCU mode / Tie to GND for SPI mode | Note 2 |
| 23 | DB7/(GND) | Databus DB7 for MCU mode / Tie to GND for SPI mode | Note 2 |
| 24 | DB6/(GND) | Databus DB6 for MCU mode / Tie to GND for SPI mode | Note 2 |
| 25 | DB0/(GND) | Databus DB0 for MCU mode / Tie to GND for SPI mode | Note 2 |
| 26 | DB1/(GND) | Databus DB1 for MCU mode / Tie to GND for SPI mode | Note 2 |
| 27 | DB2/(GND) | Databus DB2 for MCU mode / Tie to GND for SPI mode | Note 2 |
| 28 | DB3/(GND) | Databus DB3 for MCU mode / Tie to GND for SPI mode | Note 2 |
| 29 | DB4/(GND) | Databus DB4 for MCU mode / Tie to GND for SPI mode | Note 2 |
| 30 | DB5/(GND) | Databus DB5 for MCU mode / Tie to GND for SPI mode | Note 2 |
| 31 | YU/ CTP_RST | The touch panel Y up pin for RTP / Reset pin for CTP / No Connection (NC) for Non touch Version | Note 3 |
| 32 | XR/ CTP_SDA | The touch panel X right pin for RTP / I2C SDA Pin for CTP / No Connection (NC) for Non touch Version | Note 3 |
| 33 | LEDA | Anode of LED Backlight | |


Downloaded from Arrow.com.

| PIN NO. | SYMBOL | DESCRIPTION | REMARK |
|---|---|---|---|
| 34 | LEDK1 | Cathode1 of LED Backlight | |
| 35 | LEDK2 | Cathode2 of LED Backlight | |
| 36 | LEDK3 | Cathode3 of LED Backlight | |
| 37 | LEDK4 | Cathode4 of LED Backlight | |
| 38 | NC | No Connect | |
| 39 | NC | No Connect | |
| 40 | GND | Ground | |

**Note**

**Recommended LCD connector:** 40-way, 0.5 mm pitch FFC connector

1. Interface Mode Selection (pin 3)

| Value | Interface | Remark |
|---|---|---|
| 0 | MCU 16bit | Databus:DB0~DB15 |
| 1 | SPI | 4 wire SPI Mode |

2. Pins 15 to 30 are grounded on SPI mode.
3. Pins 5, 6, 31 and 32 are only applicable to touchscreen displays (4DLCD-xxxxxxxx-RTP).


Downloaded from Arrow.com.

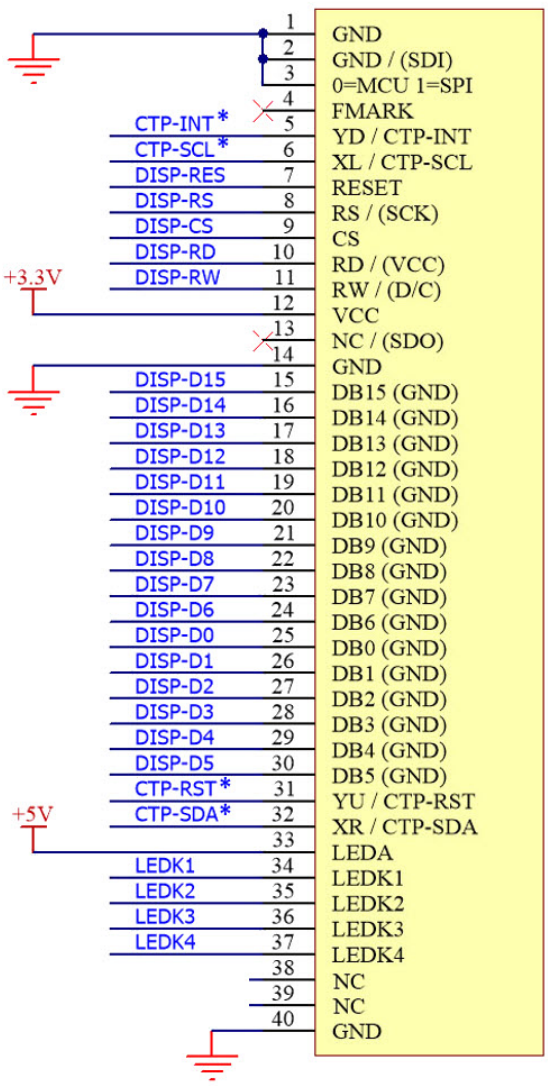


* This has no connection (NC) for Non-touch displays

**MCU Mode**

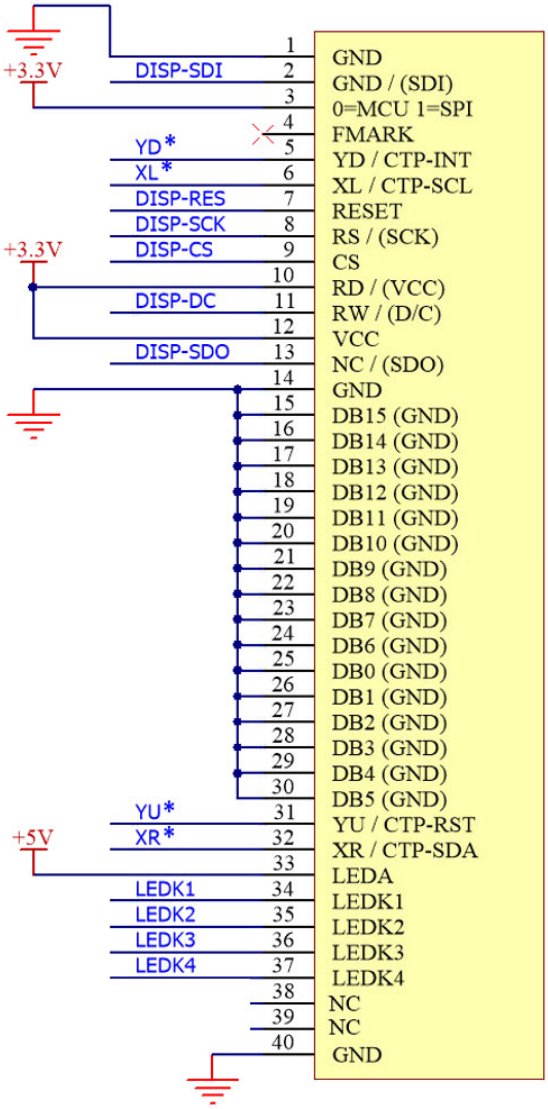


* This has no connection (NC) for Non-touch displays

**SPI Mode**

## 9.2. CTP Interface

The Capacitive Touch is driven by a **Focaltech FT6336** capacitive touch driver IC, which utilizes an I2C interface, and is capable of 1-point touch.


Downloaded from Arrow.com.

## 10. Backlight Example Circuit

The backlight circuit can be easily driven off a 5V supply. The voltage needs to be higher than the forward voltage of the LEDs and other drops in the circuit, which can be found in section 9. A 3.3V supply typically does not meet this requirement, so a 5V supply is normally used.

In this circuit, a simple transistor is used to switch each of the LEDs on, where each LED is current-limited through its resistor. The transistor base can be PWM'ed if required (Label BACKLIGHT below), to give dimming control. An example PWM frequency that could be used is 3Khz, however, it is up to the Designer to determine what is suitable for the application.

The resistance feeding each LED can be calculated using Ohms Law, V=I x R.

We want to calculate R, so R=V/I

Supply Voltage = 5V

LED Forward Voltage = 3.2V (see the Interface Descriptions section)

Estimated voltage drop over transistor = 0.3V

Target current per LED = 20mA to 25mA (use 22mA in this example) (See the Interface Descriptions section)

Formula is then R = (5V-3.2V-0.3V) / 0.022A = 68ohms for each LED (LEDK1 to LEDK4)

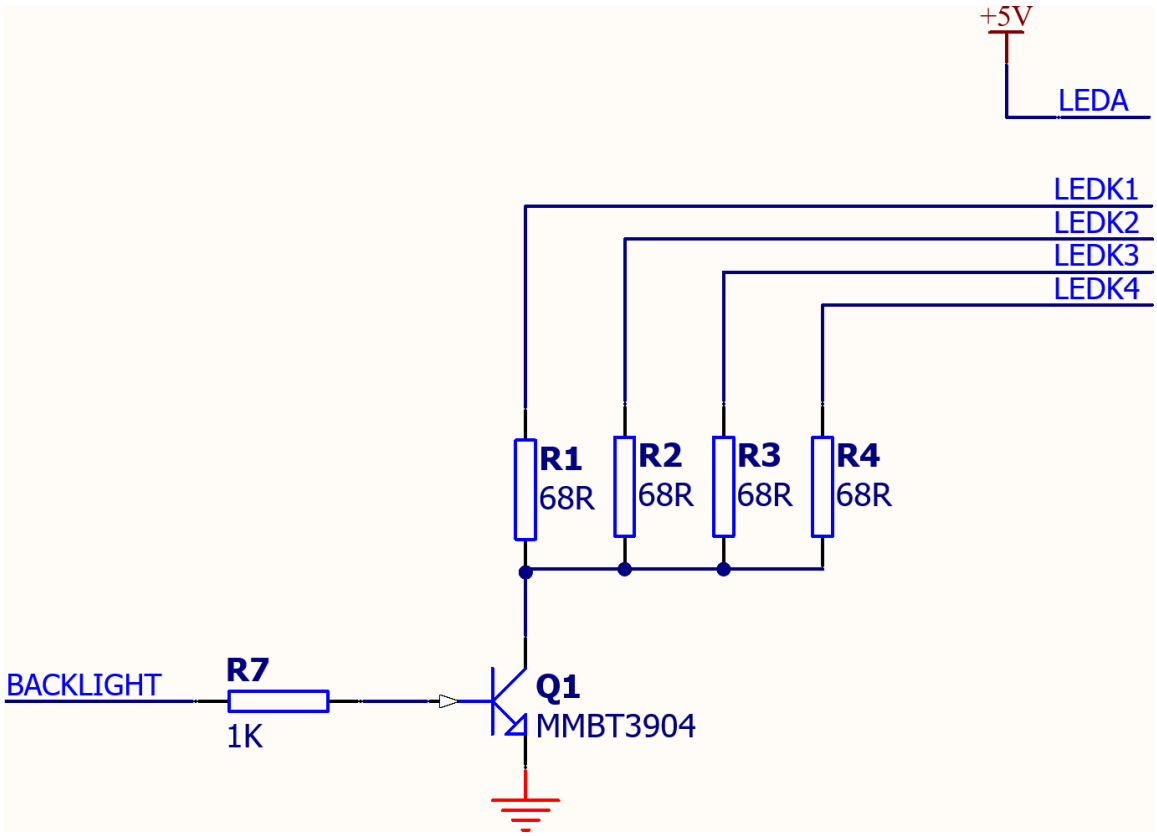



Downloaded from Arrow.com.

## 11. Initialisation Code

```
RST = 1;
Delay(200);
RST = 0;
Delay(800);
RST = 1;
Delay(800);

//-------------------------------Start Initial Sequence----------------------------------//

WriteComm(0xB0);
WriteData(0x00);
WriteData(0xc4);
WriteComm(0xB1);
WriteData(0xc0); //c0
WriteComm(0x3A);
WriteData(0x55);
WriteComm(0x36);
WriteData(0x00);
WriteComm(0xb2);
WriteData(0x0c);
WriteData(0x0c);
WriteData(0x00);
WriteData(0x33);
WriteData(0x33);
WriteComm(0xB7),
WriteData(0x75);
WriteComm(0xBB),
WriteData(0x20); //vcom
WriteComm(0xC0),
WriteData(0x2C);
WriteComm(0xC2),
WriteData(0x01);
WriteComm(0xC3); //VRH
WriteData(0x19);
WriteComm(0xC4),
WriteData(0x20);
WriteComm(0xC6),
WriteData(0x0F); //frame
WriteComm(0xD0),
WriteData(0xA7);
WriteData(0xA1);

//--------------------------------- ST7789V Power setting ----------------------------//

WriteComm(0xbb);
WriteData(0x35);
WriteComm(0xc0);
WriteData(0x2c);
WriteComm(0xc2);
WriteData(0x01);
WriteComm(0xc3);
WriteData(0x11);
WriteComm(0xc4);
```


Downloaded from Arrow.com.

```
WriteData(0x20);
WriteComm(0xc6);
WriteData(0x0f);
WriteComm(0xd0);
WriteData(0xa4);
WriteData(0xa1);

//--------------------------------- ST7789V Gamma setting ----------------------------//

WriteComm(0xE0);
WriteData(0xD0); //V0[7-4] & V63[3-0]
WriteData(0x0B); //V62[5-0]
WriteData(0x11); //V61[5-0]
WriteData(0x0B); //V59[4-0]
WriteData(0x0A); //V57[4-0]
WriteData(0x26); //J1[5-4] & V50[3-0]
WriteData(0x36); //V43[6-0]
WriteData(0x44); //V27[6-4] & V36[2-0]
WriteData(0x4B); //V20[6-0]
WriteData(0x38); //J0[5-4] & V13[3-0]
WriteData(0x14); //V6[4-0]
WriteData(0x14); //V4[4-0]
WriteData(0x2A); //V2[5-0]
WriteData(0x30); //V1[5-0]
WriteComm(0xE1);
WriteData(0xD0); //V0[7-4] & V63[3-0]
WriteData(0x0B); //V62[5-0]
WriteData(0x11); //V61[5-0]
WriteData(0x0B); //V59[4-0]
WriteData(0x0A); //V57[4-0]
WriteData(0x26); //J1[5-4] & V50[3-0]
WriteData(0x35); //V43[6-0]
WriteData(0x43); //V27[6-4] & V36[2-0]
WriteData(0x4A); //V20[6-0]
WriteData(0x38); //J0[5-4] & V13[3-0]
WriteData(0x14); //V6[4-0]
WriteData(0x14); //V4[4-0]
WriteData(0x2A); //V2[5-0]
WriteData(0x30); //V1[5-0]
WriteComm(0x11); //Exit Sleep
WriteComm(0x21);
Delay(120);
WriteComm(0x29); //Display on
Delay(120);
```


Downloaded from Arrow.com.

# 12. LCD Timing Details

## 12.1. Timing Chart

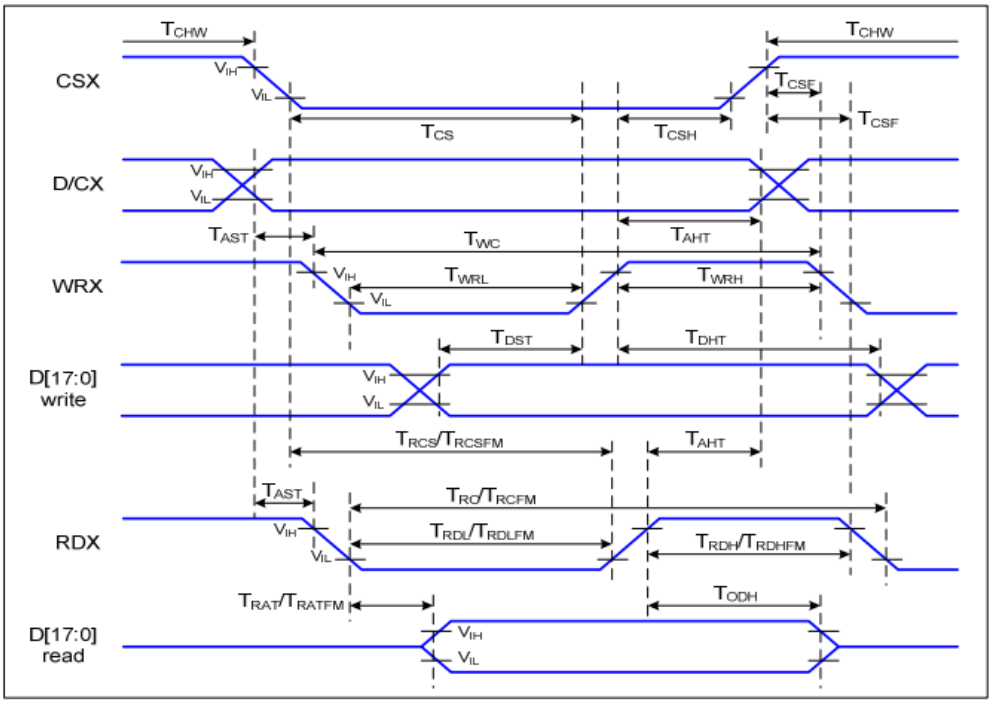


| SIGNAL | SYMBOL | PARAMETER | MIN | MAX | UNIT |
|---|---|---|---|---|---|
| DCX | tast | Address setup time | 0 | - | ns |
| | taht | Address hold time (Write/Read) | 10 | - | ns |
| CSX | tchw | CSX "H" pulse width | 0 | - | ns |
| | tcs | Chip Select setup time | 15 | - | ns |
| | trcs | Chip Select setup time (Read ID) | 45 | - | ns |
| | trcsfm | Chip Select setup time (Read FM) | 355 | - | ns |
| | tcsf | Chip Select Wait time (Write/Read) | 10 | - | ns |
| WRX | twc | Write cycle | 66 | - | ns |
| | twrh | Write Control Pulse H duration | 15 | - | ns |
| | twrl | Write Control Pulse L duration | 15 | - | ns |
| RDX(FM) | trcfm | Read cycle (FM) | 450 | - | ns |
| | trdhfm | Read Control Pulse H duration (FM) | 90 | - | ns |
| | trdlfm | Read Control Pulse L duration (FM) | 355 | - | ns |
| RDX(ID) | trc | Read cycle (ID) | 160 | - | ns |
| | trdh | Read Control Pulse H duration | 90 | - | ns |
| | trdl | Read Control Pulse L duration | 45 | - | ns |
| D[17:0] | tdst | Write data setup time | 10 | - | ns |
| | tdht | Write data hold time | 10 | - | ns |
| | trat | Read access time | - | 40 | ns |
| | Tratfm | Read access time | - | 340 | ns |
| | trod | Read output disable time | 20 | 80 | ns |


Downloaded from Arrow.com.

**Note**

Timing parameter (VDD=3.3V, GND=0V, Ta=25˚C)

## 12.2. Reset Timing

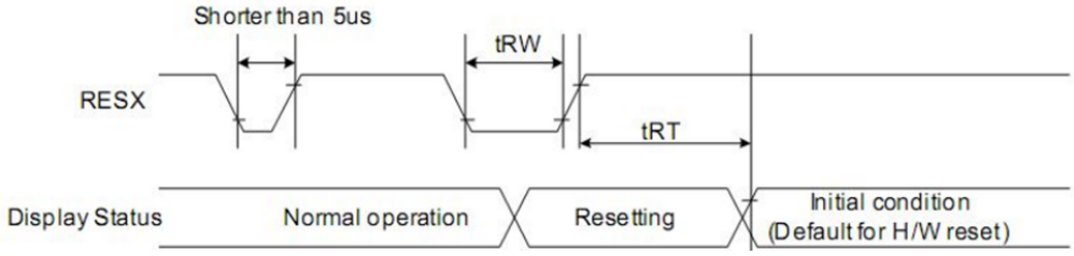


| SIGNAL | SYMBOL | PARAMETER | MIN | MAX | UNIT |
|---|---|---|---|---|---|
| RESET | tRW | Reset low pulse width | 10 | - | us |
| | tRT | Reset complete time | - | 5 (note1) | ms |
| | | | - | 120 (note2) | ms |

**Note**

1. When reset is applied during SLPIN mode.
2. When reset applied during SLPOUT mode.

## 12.3. Power On Sequence

### 12.3.1. Case 1 - RES line is held High or Unstable by Host at Power ON

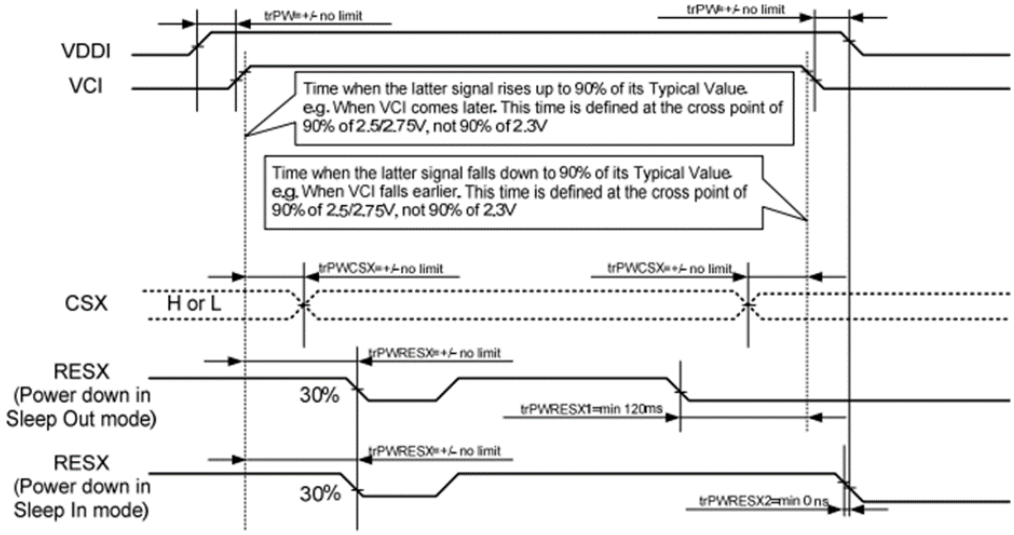


trPWRESX1 is applied to RESX falling in the Sleep Out Mode
trPWRESX2 is applied to RESX falling in the Sleep In Mode


Downloaded from Arrow.com.

### 12.3.2. Case 2 - RES line is held Low by Host at Power ON

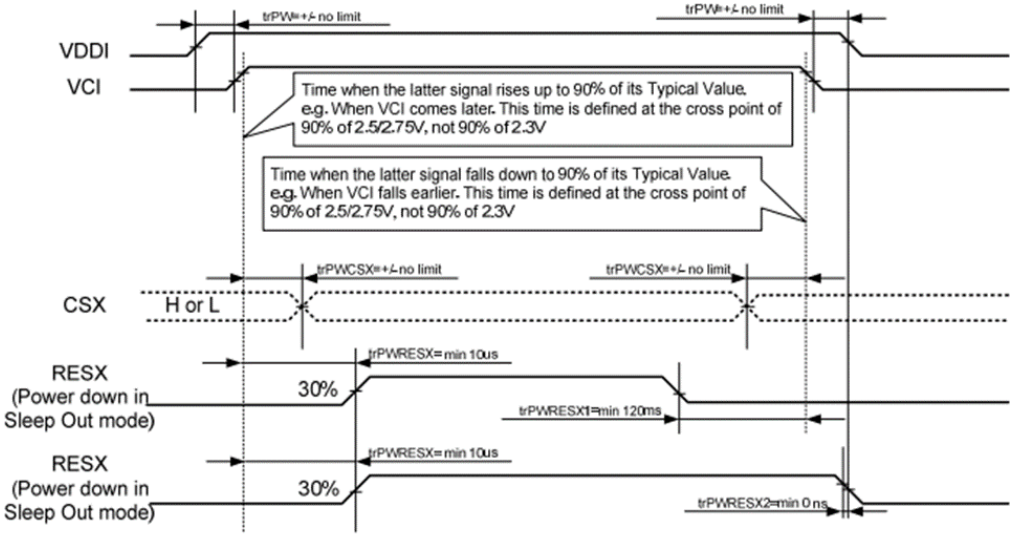


trPWRESX1 is applied to RESX falling in the Sleep Out Mode
trPWRESX2 is applied to RESX falling in the Sleep In Mode

## 12.4. Power-off Sequence - Uncontrolled Power Off

Uncontrolled power off is a situation where power is removed unexpectedly, e.g. a battery powering a device is disconnected without using the controlled power off sequence. There will not be any damage to the display module, nor will the display module cause any damage to the host. During an uncontrolled power-off event, ILI9341V will force the display to blank its content and there will not be any further abnormal visible effects on the display after 1 second of the power being removed. The display will remain blank until the Power On Sequence occurs.


Downloaded from Arrow.com.

# 13. Reliability Test

**Reliability Test**

| No. | SYMBOL | TEST CONDITION | REMARK |
|---|---|---|---|
| 1 | High Temperature Storage | 80°C±2°C 96H<br>Restore 2H at 25°C<br>Power off | |
| 2 | Low Temperature Storage | -30°C±2°C 96H<br>Restore 2H at 25°C<br>Power off | |
| 3 | High Temperature Operation | 70°C±2°C 96H<br>Power on | |
| 4 | Low Temperature Operation | -20°C±2°C 96H<br>Power on | |
| 5 | High Temperature & Humidity Operation | 60°C±2°C<br>90%RH 96H<br>Power on | After test cosmetic and electrical defects should not happen. |
| 6 | Temperature Cycle | -20°C←→25°C←→70°C<br>30min 5min 30min<br><br>After 10 cycles, restore 2H at 25°C<br>Power off | |
| 7 | Vibration Test | 10Hz~150Hz, 100m/s$^2$,<br>120min | |
| 8 | Shock Test | Half-sinewave, 300m/s$^2$,<br>11ms | |

**Note**

The Displays are of the highest rated 'Grade A', which allows for 0-4 defective pixels. A defective pixel could be solid Black (Dead), White, Red, Green or Blue.


Downloaded from Arrow.com.

# 14. Precautions for Using LCD Modules

## 14.1. Handing Precautions

- The display panel is made of glass and a polarizer. The glass is fragile. It tends to be chipped during handling, especially on the edges. Please avoid dropping or jarring. Please be careful not subject it to a mechanical shock by dropping it on impact.
- If the display panel is damaged and the liquid crystal substance leaks out, be sure not to get any of it in your mouth. If the substance contacts your skin or clothes, wash it off using soap and water.
- Do not apply excessive force to the display surface or the adjoining areas since this may cause the color tone to vary. Do not touch the display with bare hands. This will stain the display area and degrade insulation between terminals (some cosmetics are determined by the polarizer).
- The polarizer covering the display surface of the LCD module is soft and easily scratched. Handle this polarizer carefully. Do not touch, push or rub the exposed polarizer with anything harder than an HB pencil lead (e.g., glass, tweezers, etc.). Do not put or attach anything to the display area to avoid leaving marks on it. Condensation on the surface and contact with terminals due to cold temperatures will damage, stain or contaminate the polarizer. After products are tested at low temperatures they must be warmed up in a container before coming into contact with room-temperature air.
- If the display surface becomes contaminated, breathe on the surface and gently wipe it with a soft dry cloth. If it is heavily contaminated, moisten the cloth with one of the following solvents
    - Isopropyl alcohol
    - Ethyl alcohol Do not scrub hard as it might damage the display surface.
- Solvents other than those mentioned above may damage the polarizer. Especially the following.
    - Water
    - Ketone
    - Aromatic solvents
      Wipe off saliva or water drops immediately, contact with water over a long period may cause deformation or color fading. Avoid contact with oil and fat.
- Take necessary precautions to minimize corrosion of the electrode. Corrosion of the electrodes is accelerated by water droplets, moisture condensation or current flow in a high-humidity environment.
- Do not attempt to disassemble or process the LCD module.
- NC terminal should be open. Do not connect anything to it.
- If the logic circuit power is off, do not apply input signals.


Downloaded from Arrow.com.

- Control Electro-Static Discharge. Since this module uses a CMOS LSI, the same careful attention should be paid to electrostatic discharge as for an ordinary CMOS IC. To prevent the destruction of the elements by static electricity, ensure that an optimum work environment is maintained.
    - Before removing the LCM from its packing case or incorporating it into a set, be sure that the module and your body have the same electric potential. Be sure to ground your body when handling the LCD modules.
    - To reduce the amount of static electricity generated, do not conduct assembly and other work under dry conditions. To reduce the generation of static electricity, please ensure that the air in the work environment is not too dry. Relative humidity of 50%-60% is recommended. As much as possible, make the electric potential of your work clothes and that of the workbench the ground potential.
    - The LCD module is coated with a film to protect the display surface. Be careful when peeling off this protective film since static electricity may be generated.
- Since the LCM has been assembled and adjusted with a high degree of precision, avoid applying excessive shocks to the module or making any alterations or modifications to it.
    - Do not alter, modify or change the shape of the tab on the metal frame.
    - Do not make extra holes on the printed circuit board, modify its shape or change the positions of the components to be attached.
    - Do not damage or modify the pattern writing on the printed circuit board.
    - Do not modify the zebra rubber strip (conductive rubber) or heat seal connector.
    - Do not drop, bend or twist the LCM.


Downloaded from Arrow.com.

## 14.2. Storage Precautions

When storing the LCD modules, the following precautions are necessary.

- Store them in a sealed polyethylene bag. If properly sealed, there is no need for the desiccant.
- Store them in a dark place. Do not expose to sunlight or fluorescent light, keep the temperature between 0°C and 35°C, and keep the relative humidity between 40%RH and 60%RH.
- The polarizer surface should not come in contact with any other objects. We advise you to store them in an anti-static electricity container in which they were shipped. Some Liquid crystals solidify under low temperatures (below the storage temperature range) leading to defective orientation or the generation of air bubbles (black or white). Air bubbles may also be generated if the module is subjected to low temperatures.
- If the LCD modules have been operating for a long time showing the same display patterns, the display patterns may remain on the screen as ghost images and a slight contrast irregularity may also appear. A normal operating status can be regained by suspending use for some time. It should be noted that this phenomenon does not adversely affect performance reliability.
- To minimize the performance degradation of the LCD modules resulting from the destruction caused by static electricity etc., please avoid holding the following sections when handling the modules'
    - The exposed area of the printed circuit board
    - Terminal electrode sections


Downloaded from Arrow.com.

# 15. Revision History

**Document Revision**

| Revision Number | Date | Description |
|---|---|---|
| 1.0 | 03/01/2019 | Initial Version |
| 1.1 | 28/08/2020 | Minor Updates / Fixes |
| 1.2 | 14/06/2021 | Minor Updates |
| 1.3 | 24/06/2021 | Added logic current consumption data, added backlight circuit example |
| 1.4 | 09/02/2022 | Driver IC Change to ST7789V |
| 1.5 | 20/01/2023 | Modified datasheet for web-based documentation |
| 1.6 | 02/04/2025 | Remove irrelevant precaution related to mounting ears |


Downloaded from Arrow.com.

# 16. Legal Notice

## 16.1. Proprietary Information

The information contained in this document is the property of 4D Systems Pty. Ltd. and may be the subject of patents pending or granted, and must not be copied or disclosed without prior written permission. 4D Systems endeavours to ensure that the information in this document is correct and fairly stated but does not accept liability for any error or omission. The development of 4D Systems products and services is continuous and published information may not be up to date. It is important to check the current position with 4D Systems. 4D Systems reserves the right to modify, update or makes changes to Specifications or written material without prior notice at any time.

All trademarks belong to their respective owners and are recognised and acknowledged.

## 16.2. Disclaimer of Warranties & Limitations of Liabilities

4D Systems makes no warranty, either expressed or implied with respect to any product, and specifically disclaims all other warranties, including, without limitation, warranties for merchantability, non-infringement and fitness for any particular purpose.

Information contained in this publication regarding device applications and the like is provided only for your convenience and may be superseded by updates. It is your responsibility to ensure that your application meets with your specifications.

Images and graphics used throughout this document are for illustrative purposes only. All images and graphics used are possible to be displayed on the 4D Systems range of products, however the quality may vary.

In no event shall 4D Systems be liable to the buyer or to any third party for any indirect, incidental, special, consequential, punitive or exemplary damages (including without limitation lost profits, lost savings, or loss of business opportunity) arising out of or relating to any product or service provided or to be provided by 4D Systems, or the use or inability to use the same, even if 4D Systems has been advised of the possibility of such damages.

4D Systems products are not fault tolerant nor designed, manufactured or intended for use or resale as on line control equipment in hazardous environments requiring fail - safe performance, such as in the operation of nuclear facilities, aircraft navigation or communication systems, air traffic control, direct life support machines or weapons systems in which the failure of the product could lead directly to death, personal injury or severe physical or environmental damage ('High Risk Activities'). 4D Systems and its suppliers specifically disclaim any expressed or implied warranty of fitness for High Risk Activities.

Use of 4D Systems' products and devices in 'High Risk Activities' and in any other application is entirely at the buyer's risk, and the buyer agrees to defend, indemnify and hold harmless 4D Systems from any and all damages, claims, suits, or expenses resulting from such use. No licenses are conveyed, implicitly or otherwise, under any 4D Systems intellectual property rights.


Downloaded from Arrow.com.