75W AC/DC High Reliable Multi-Industries Enclosed Type Power Supply NSP-75 series

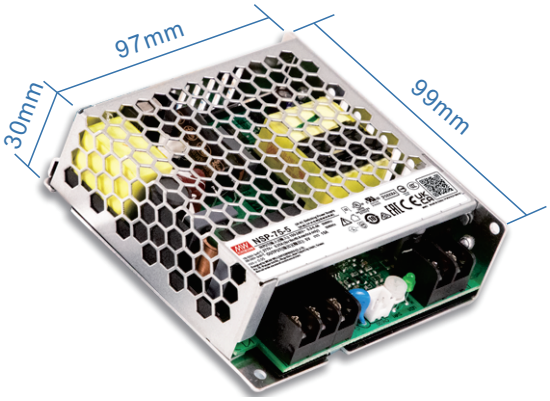

User's Manual

IEC62368-1
IEC61558-1/-2-16
IEC61010-1/-2-201
IEC60601-1
IEC60335-1
IEC62477-1

BS EN/EN62368-1
BS EN/EN61558-1/-2-16
BS EN/EN61010-1/-2-201
BS EN/EN60601-1
BS EN/EN60335-1
BS EN/EN62477-1

UL62368-1
UL61010-1/-2-201
ANSI/AAMI ES60601-1

LISTED
UL61010-1

(Note.5) GB4943.1 CNS15598-1 KC62368-1 (By request) IS13252 (By request Note.7) TPTC004

Features

- 85~305Vac input with PFC(277Vac available)
- No load power consumption <0.3W~0.5W by R.C.
- Global certificates in multi-fields (ITE 62368-1, Medical 60601-1,Household 60335-1, Industrial 61558-1/2-16/61010-1, Energy converter 62477-1)
- 200% peak power capability(12~60V models)
- High efficiency up to 92%
- -40~85℃ wide range operation temperature(> +60℃ derating)
- Extremely low leakage current<350μA, 2 x MOPP, suitable for BF medical applications
- Built-in constant current limiting circuit
- Protections: Short circuit / Overload / Over voltage / Over temperature
- Fanless design for noise sensitive applications
- Built-in remote ON/OFF control
- Over voltage category Ⅲ (OVC Ⅲ)
- Operating altitude up to 5000 meters
- Conformal coating
- 5 years warranty

Applications

- Industrial automation machinery/ control system
- Security system
- Mechanical and electrical equipment
- Electronic instruments, equipments orapparatus
- Network equipment
- Telecom devices
- Power sourcing equipment of PoE
- Home automation
- Medical devices

GTIN CODE

MW Search: https://www.meanwell.com/serviceGTIN.aspx

Description

The NSP-75 series is a 75W AC/DC power supply with PFC function, designed for high reliability and suitable for multiple industries. Key features include: compact size (99*97*30 mm) for better space utilization in system installations, ultra-wide input range of 85~305Vac for global compatibility, up to 92% efficiency and low standby power consumption (<0.3W~0.5W) for energy-saving and carbon reduction, constant current design with 200% peak power capability, fanless design, wide operating temperature range from -40 to +85°C(+60°C at full load), compliance with OVCIII, built-in Remote Control , internal PCB coating, complete protections, certifications for multiple safety standards including 62368-1, 60601-1, 61558-1, 60335-1, 62477-1, and 61010-1, as well as 2 X MOPP compliance and extremely low leakage current (<350μA). It is suitable for BF-rated medical equipment and comes with a 5-years warranty, making it a highly cost-effective solution for industrial power supply needs.

Model Encoding

NSP - 75 - 24

- 24 → Output voltage (5V/12V/15V/24V/27V/36V/48V/60V)
- 75 → Output wattage
- NSP → Series name

Downloaded from Arrow.com.

75W AC/DC High Reliable Multi-Industries Enclosed Type Power Supply NSP-75 series

SPECIFICATION		NSP-75-5	NSP-75-12	NSP-75-15	NSP-75-24	NSP-75-27	NSP-75-36	NSP-75-48	NSP-75-60
OUTPUT									
DC VOLTAGE		5V	12V	15V	24V	27V	36V	48V	60V
RATED CURRENT		15A	6.3A	5A	3.2A	2.8A	2.1A	1.6A	1.3A
CURRENT RANGE		0 ~ 15A	0 ~ 6.3A	0 ~ 5A	0 ~ 3.2A	0 ~ 2.8A	0 ~ 2.1A	0 ~ 1.6A	0 ~ 1.3A
RATED POWER		75W	75.6W	75W	76.8W	75.6W	75.6W	76.8W	78W
PEAK	CURRENT(5 sec.)	N/A	12.5A	10A	6.3A	5.6A	4.2A	3.2A	2.5A
	POWER(5 sec.)	N/A	150W	150W	150W	150W	150W	150W	150W
RIPPLE & NOISE (max.) Note.2		150mVp-p	150mVp-p	150mVp-p	200mVp-p	240mVp-p	240mVp-p	240mVp-p	300mVp-p
VOLTAGE ADJ. RANGE		4.7 ~ 5.5V	10.8 ~ 14V	15 ~ 19V	21 ~ 26V	26 ~ 32V	32 ~ 43V	44 ~ 57V	54 ~ 72V
VOLTAGE TOLERANCE Note.3		±2.0%	±2.0%	±2.0%	±1.0%	±1.0%	±1.0%	±1.0%	±1.0%
LINE REGULATION		±0.5%	±0.5%	±0.5%	±0.5%	±0.5%	±0.5%	±0.5%	±0.5%
LOAD REGULATION		±1.0%	±0.5%	±0.5%	±0.5%	±0.5%	±0.5%	±0.5%	±0.5%
SETUP, RISE TIME		1500ms, 80ms/115Vac 1000ms, 80ms/230Vac 1000ms, 80ms/277Vac							
HOLD UP TIME (Typ.)		16ms at full load							
INPUT									
VOLTAGE RANGE Note.4		85 ~ 305Vac 120 ~ 431Vdc							
NO LOAD POWER CONSUMPTION(Typ.)	Remote Power OFF	0.3W/115Vac 0.5W/230Vac 0.5W/277Vac							
	Remote Power ON	2W/115Vac 2W/230Vac 2W/277Vac							
FREQUENCY RANGE		47 ~ 63Hz							
POWER FACTOR (Typ.)		PF>0.98/115Vac, PF>0.93/230Vac, PF>0.9/277Vac at full load							
EFFICIENCY (Typ.)		90.5%	92%	92%	90.5%	91%	91.5%	92%	92%
AC CURRENT (Typ.)		0.8A/115Vac 0.4A/230Vac 0.35A/277Vac							
INRUSH CURRENT (Typ.)		COLD START 20A/115Vac 35A/230Vac 45A/277Vac							
LEAKAGE CURRENT		Earth leakage current <350μA(rms)@277Vac, touch current<100μA(rms) @ 277Vac							
PROTECTION									
SHORT CIRCUIT		5V	Hiccup mode,recovers automatically after fault condition is removed						
		12V-60V	Constant current limiting for more than 5 seconds (Vout<30%) and then shut down o/p voltage, AC re-power on to recover						
OVERLOAD		5V	105%~170% rated output power; Hiccup mode,recovers automatically after fault condition is removed						
		12V ~ 60V	Normally works within 105 ~ 200% rated output power for more than 5 seconds and then constant current limiting without shutdown(Vout>30%), recovers automatically after fault condition is removed, or shut down o/p voltage when Vout<30%,AC re-power on to recover						
			>200% rated power, constant current limiting (Vout>30%)with auto-recovery after fault condition is removed, or shut down o/p voltage when Vout<30%,AC re-power on to recover						
OVER VOLTAGE		5.8 ~ 7.5V	15 ~ 19V	20 ~ 25V	28 ~ 36V	33~ 42V	44 ~ 54V	58~ 70V	73~ 86V
		Protection type : Shut down o/p voltage, AC re-power on to recover							
OVER TEMPERATURE		Shut down o/p voltage, AC re-power on to recover							
FUNCTION									
REMOTE CONTROL		POWER ON: RC+~RC- 0~0.8Vdc or open POWER OFF: RC+~RC- 3.3~10 Vdc by external voltage							
ENVIRONMENT									
WORKING TEMP.		-40 ~ +85°C (Refer to "Derating Curve")							
WORKING HUMIDITY		20 ~ 90% RH non-condensing							
STORAGE TEMP., HUMIDITY		-40 ~ +85°C, 10 ~ 95% RH non-condensing							
TEMP. COEFFICIENT		±0.05%/°C (0 ~ 60°C)							
VIBRATION		10 ~ 500Hz, 2G 10min./1cycle, 60min. each along X, Y, Z axes							

Downloaded from Arrow.com.

SAFETY & EMC (Note 5&6)	
SAFETY STANDARDS	CB IEC62368-1, IEC60335-1, IEC61558-1/-2-16, IEC61010-1/-2-201, IEC60601-1; IEC62477-1 DEKRA BS EN/EN62368-1, BS EN/EN60335-1, BS EN/EN61558-1/-2-16, BS EN/EN61010-1/-2-201, BS EN/EN60601-1(3.2 Version);BS EN/EN62477-1 UL UL62368-1, ANSI/AAMI ES60601-1(3.2 Version),UL61010-1/-2-201 CCC GB4943.1 BSMI CNS15598-1 EAC TP TC 004 SEMI F47 approved; KC/BIS KC 62368-1 and BIS IS 13252(Part 1) certified, no stock by request, contact sales for inquires
ISOLATION LEVEL (Note 7)	Primary-Secondary: 2xMOPP, Primary-Earth: 1xMOPP, Secondary-Earth: 1xMOPP
OVER VOLTAGE CATEGORY (Note 8)	IEC/EN 61558-1/-2-16 (OVC Ⅲ, altitude up to 2000M) IEC/EN/UL 62368-1 (OVC Ⅱ, altitude up to 5000M) IEC/EN 60335-1 (OVC Ⅱ, altitude up to 5000M) IEC/EN/ANSI/AAMI ES60601-1 (OVC Ⅱ, altitude up to 4000M) IEC/EN/UL 61010-1/-2-201 (OVC Ⅱ, altitude up to 5000M) IEC/EN 62477-1 (OVC Ⅱ, altitude up to 5000M)
SAFETY EXTRA-LOW VOLTAGE(SELV)	IEC/EN 61558-2-16 (SELV, 5 ~ 36V) IEC/EN 60335-1 (SELV, 5 ~ 36V) IEC/EN/UL 62368-1 (SELV/ES1, 5 ~ 36V)
WITHSTAND VOLTAGE	I/P-O/P:4.2KVac I/P-FG:2.1KVac O/P-FG:1.5KVac
ISOLATION RESISTANCE	I/P-O/P, I/P-FG, O/P-FG:100M Ohms / 500VDC / 25℃/ 70% RH

	Parameter	Standard	Test Level / Note
EMC EMISSION	Conducted	BS EN/EN55032(CISPR32),CNS 15936,GB/T 9254.1,KS C 9832	Class B
		BS EN/EN55014-1(CISPR14-1)	
		BS EN/EN55011(CISPR11)	Class B
	Radiated	BS EN/EN55032(CISPR32),CNS 15936,GB/T 9254.1,KS C 9832	Class B
		BS EN/EN55014-1(CISPR14-1)	
		BS EN/EN55011(CISPR11)	Class B
	Harmonic Current	BS EN/EN61000-3-2(IEC61000-3-2)	Class A
	Voltage Flicker	BS EN/EN61000-3-3(IEC61000-3-3)	-----

	BS EN/EN55035(CISPR35),BS EN/EN61000-6-2(IEC61000-6-2),BS EN/EN60601-1-2(IEC60601-1-2), BS EN/EN55014-2(CISPR14-2),KS C 9835,SEMI F47 tested at 200Vac		
	Parameter	**Standard**	**Test Level / Note**
EMC IMMUNITY	ESD	BS EN/EN61000-4-2	Level 4, 15KV air ; Level 4, 8KV contact
	Radiated	BS EN/EN61000-4-3	Level 3, 10V/m(80MHz~2.7GHz) Table 9, 9~28V/m(385MHz~5.78GHz)
	EFT / Burst	BS EN/EN61000-4-4	Level 3, 2KV
	Surge	BS EN/EN61000-4-5	Level 4, 2KV/Line-Line 4KV/Line-Earth
	Conducted	BS EN/EN61000-4-6	Level 3, 10V
	Magnetic Field	BS EN/EN61000-4-8	Level 4, 30A/m
	Voltage Dips and Interruptions	BS EN/EN61000-4-11	>95% dip 0.5 periods, 30% dip 25 periods, >95% interruptions 250 periods

OTHERS	
MTBF	2163.5 K hrs min. Telcordia SR-332 (Bellcore) ; 250.4 K hrs min. MIL-HDBK-217F (25℃)
DIMENSION (L*W*H)	**99*97*30mm**
PACKING	0.3Kg;45pcs/13.9Kg/0.91CUFT

NOTE

1. All parameters NOT specially mentioned are measured at 230Vac input, rated load and 25℃ of ambient temperature.
2. Ripple & noise are measured at 20MHz of bandwidth by using a 12" twisted pair-wire terminated with a 0.1uF & 47uF parallel capacitor.
3. Tolerance: includes set up tolerance, line regulation and load regulation.
4. Derating may be need under low input voltages. Please refer to "STATIC CHARACTERISTIC" sections for details.
5. The Regulatory Compliance Mark (RCM) is applied on a voluntary basis. The equipment meets the relevant IEC or AS/NZS standards, or AS/NZS 3820 where applicable. The use of the RCM mark complies with AS/NZS 4417.1.
6. The power supply is considered a component which will be installed into a final equipment. All the EMC tests are been executed by mounting the unit on a 360mm*360mm metal plate with 1mm of thickness. The final equipment must be re-confirmed that it still meets EMC directives. For guidance on how to perform these EMC tests, please refer to "EMI testing of component power supplies." (as available on https://www.meanwell.com//Upload/PDF/EMI_statement_en.pdf)
7. Some factory or model may not have the BIS logo, please contact your MEAN WELL sales for more information.
8. MOPP is suitable for 100-240Vac input only
9. The ambient temperature derating of 3.5℃/1000m with fanless models and 5℃/1000m with fan models for operating altitude higher than 2000m(6500ft).

※ Product Liability Disclaimer: For detailed information, please refer to https://www.meanwell.com/serviceDisclaimer.aspx

Downloaded from Arrow.com.

■ Block Diagram

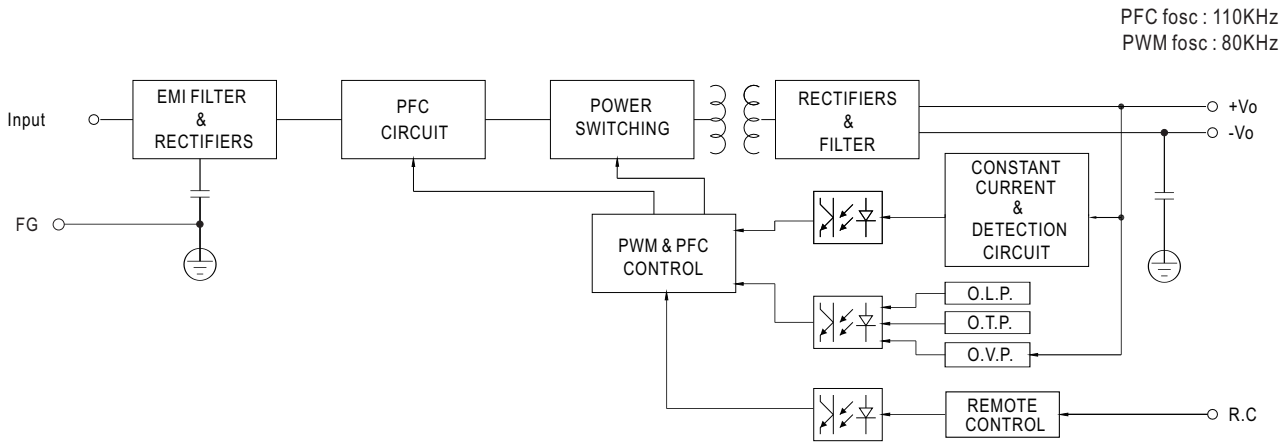

■ Derating Curve

Suitable for 100/110/115/120Vac System
(85~135Vac)

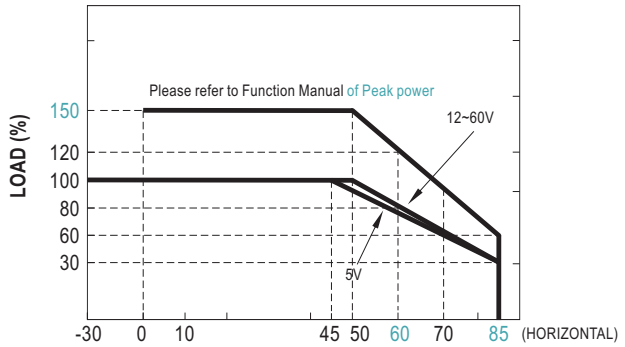

AMBIENT TEMPERATURE (℃)

Note: Below 100Vac @-30℃ there may be a restart situation within 3 seconds after power-on

Suitable for 220/230/240/277Vac System
(180~305Vac)

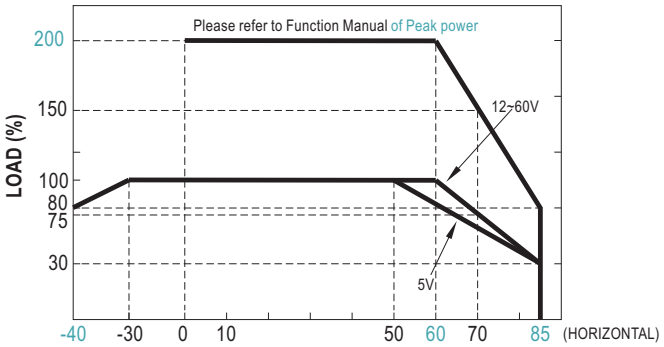

AMBIENT TEMPERATURE (℃)

■ Output Derating vs Input Voltage

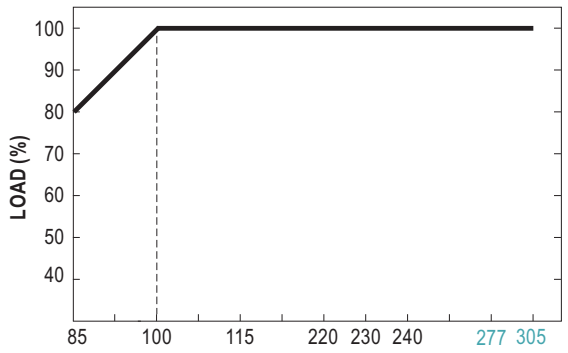

INPUT VOLTAGE (Vac) 60Hz

Downloaded from Arrow.com.

■ Function Manual

1. Peak Power

$$P_{av} = \frac{P_{pk} \times t + P_{npk} \times (T-t)}{T} \leqslant P_{rated}$$

$$\text{Duty} = \frac{t}{T} \times 100\% \leqslant 35\%$$

$t \leq 5$ sec

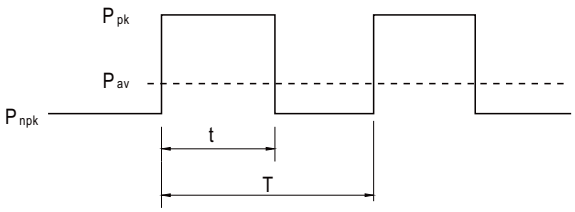

P_{av} : Average output power (W)

P_{pk} : Peak output power (W)

P_{npk} : Non-peak output power (W)

P_{rated} : Rated output power (W)

t : Peak power width (sec)

T : Period (sec)

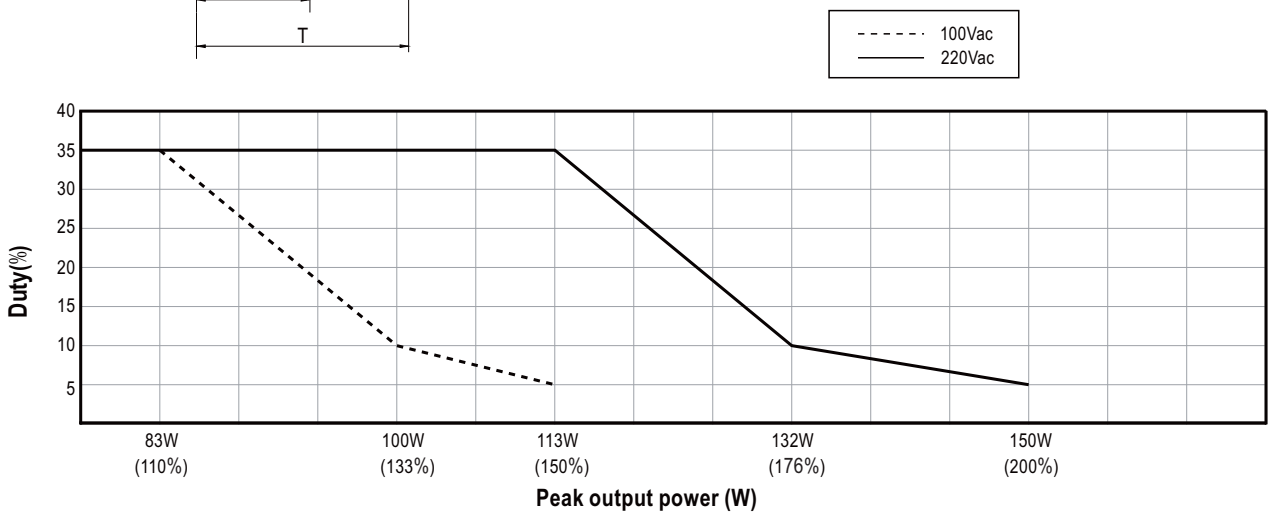

For example (24V model) :

Vin = 200Vac Duty_max = 5%

$P_{av} = P_{rated} = 75W$

$P_{pk} = 150W$

$t \leqslant 5$ sec

$$T \geqslant \frac{5\text{ sec}}{5\%} \geqslant 100\text{sec}$$

$$P_{npk} \leqslant \frac{T P_{av} - t P_{pk}}{T-t}$$

$P_{npk} \leqslant 71W$

Note:When the output voltage is adjusted to the upper limit, the peak power is 150% rated power

2.Remote Control

The PSU can be turned ON/OFF by using the "Remote Control" function with external switch and auxiliary power

PSU Vo Status	Between RC+(pin1) and RC-(pin2) on CN1
POWER ON	Keep 0~0.8Vdc or open
POWER OFF	Keep 3.3~10Vdc by external voltage

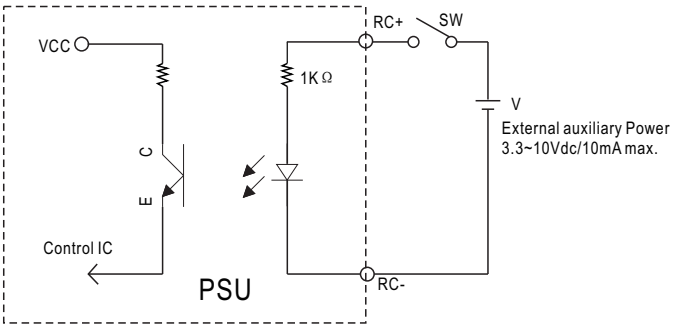

Downloaded from Arrow.com.

■ Mechanical Specification

Case No.240A Unit:mm Tolerance:±1

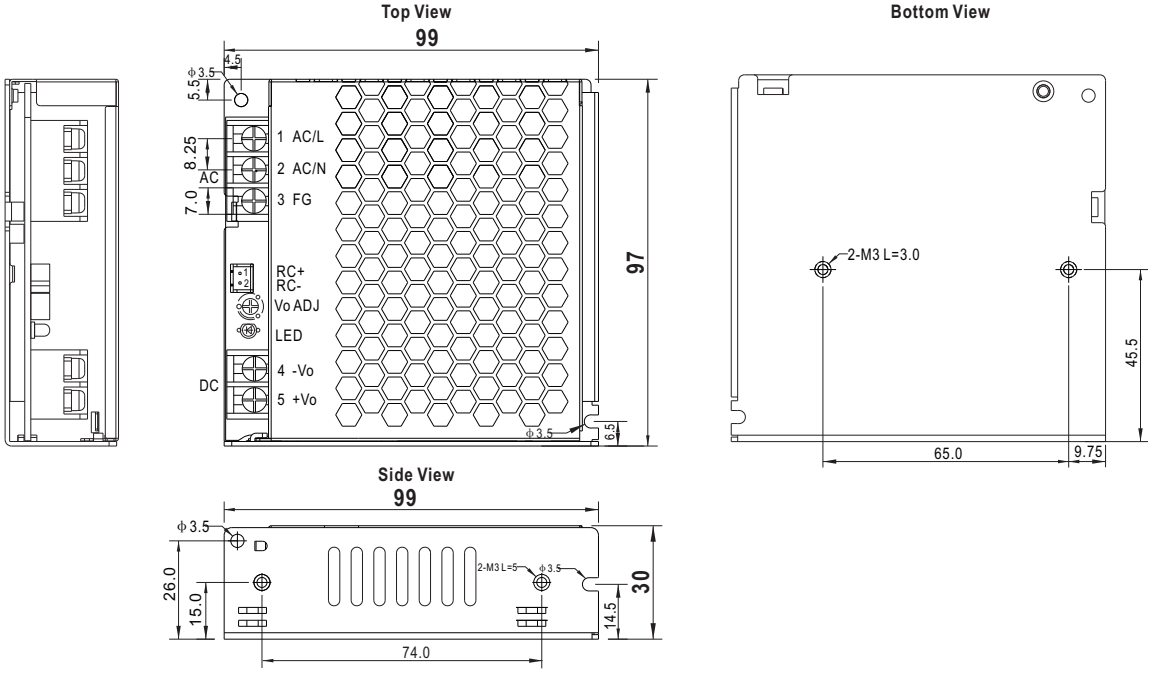

※ Input Terminal Pin No. Assignment

Pin No.	Assignment	Diagram	Screw thread	Mounting torque
1	AC/L or DC input +Vin		M3	4~5Kgf.cm
2	AC/N or DC input -Vin			
3	FG ⏚			

※ DC Output Terminal Pin No. Assignment

Pin No.	Assignment	Diagram	Screw thread	Mounting torque
4	-Vo		M3	4~5Kgf.cm
5	+Vo			

Remote ON/OFF: JST S2B-XH or equivalent

Pin No.	Assignment	Mating Housing	Terminal
1	RC+	JST XHP or equivalent	JST SXH-001T-P0.6 or equivalent
2	RC-		

■ Accessory List

No.	Item		Quantity
1	Control function interface(CN1) mating wire along with NSP-75 (standard accessory)	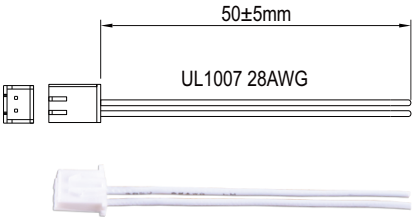	1pcs/per model
2	Terminal cover MW'S Order NO. : PEE4TBC-03, PEE4TBC-02 (By request accessory,should ordered seperatey)	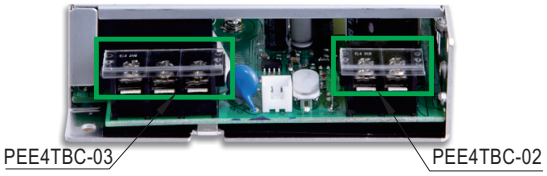	1pcs/per model

■ Installation Manual

Please refer to : http://www.meanwell.com/manual.html

Downloaded from Arrow.com.