Connector Location A

Connector Location B

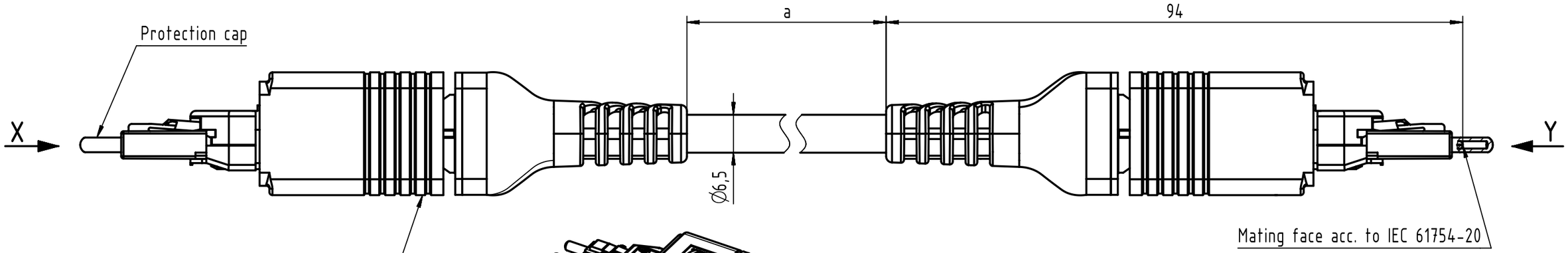

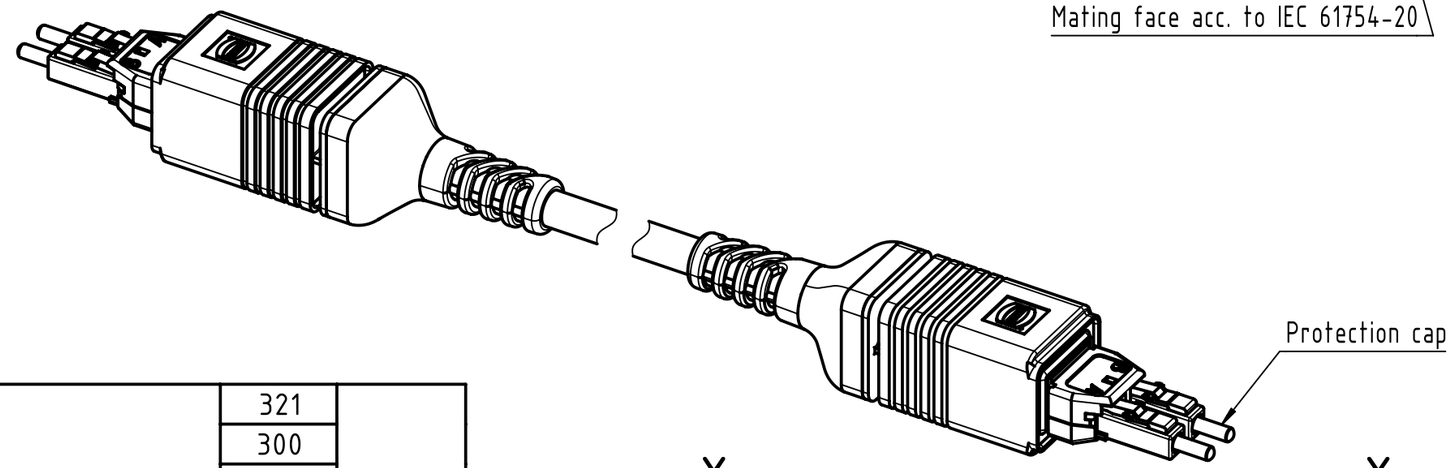

-Protection level: IP67/65
-Temperature range: -40°C ...+70°C

Cont. no.	Part no.	Type of cable	Dim. a[m]	
20	33582313210015	Fiber optic breakout cable, SM 9/125µm	321	± 1%
19	33582313000015		300	
18	33582312290015		229	
17	33582311480015		148	
16	33582311140015		114	
15	33582311100015		110	
14	33582311060015		106	
13	33582311000015		100	
12	33582310870015		87	
11	33582310730015		73	
10	33582310600015		60	
9	33582310500015		50	
8	33582310400015		40	
7	33582310300015		30	
6	33582310200015		20	
5	33582310100015		10	
4	33582310050015		5	
3	33582320410015		4.1	
2	33582310030015		3	
1	33582310010015		1	± 0.015

X
(without protection cap)

Y
(without protection cap)

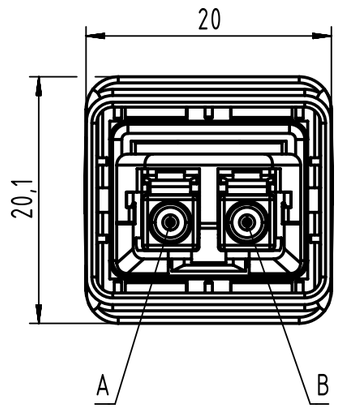

Loading-Plan

A — blue — B
B — orange — A

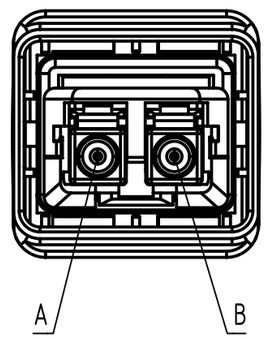

All Dimensions in mm | Tech. Character. | Free size tol. | According to production drawing

All rights reserved

Department HCS - RO

HARTING Customised Solutions
D-32427 Minden

Created by	Inspected by	Standardisation	Date	State
MUNTEANV	POPESCUD	AVRAM	2017-03-20	Final Release

Title: HARTING PushPull LC Cable Assembly

Doc-Key / ECM-Nr.: 100201174/UGD/013/C 500000117006

Type: TB | Number: 335823XXXX0015 | Rev.: C | Page: 1/1

A3

Downloaded from Arrow.com.