PRODUCT CATALOG

HIROSE ELECTRIC CO.,LTD.

ZX Series

Micro-USB connectors meeting USB 2.0 Standard

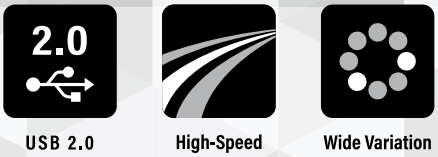

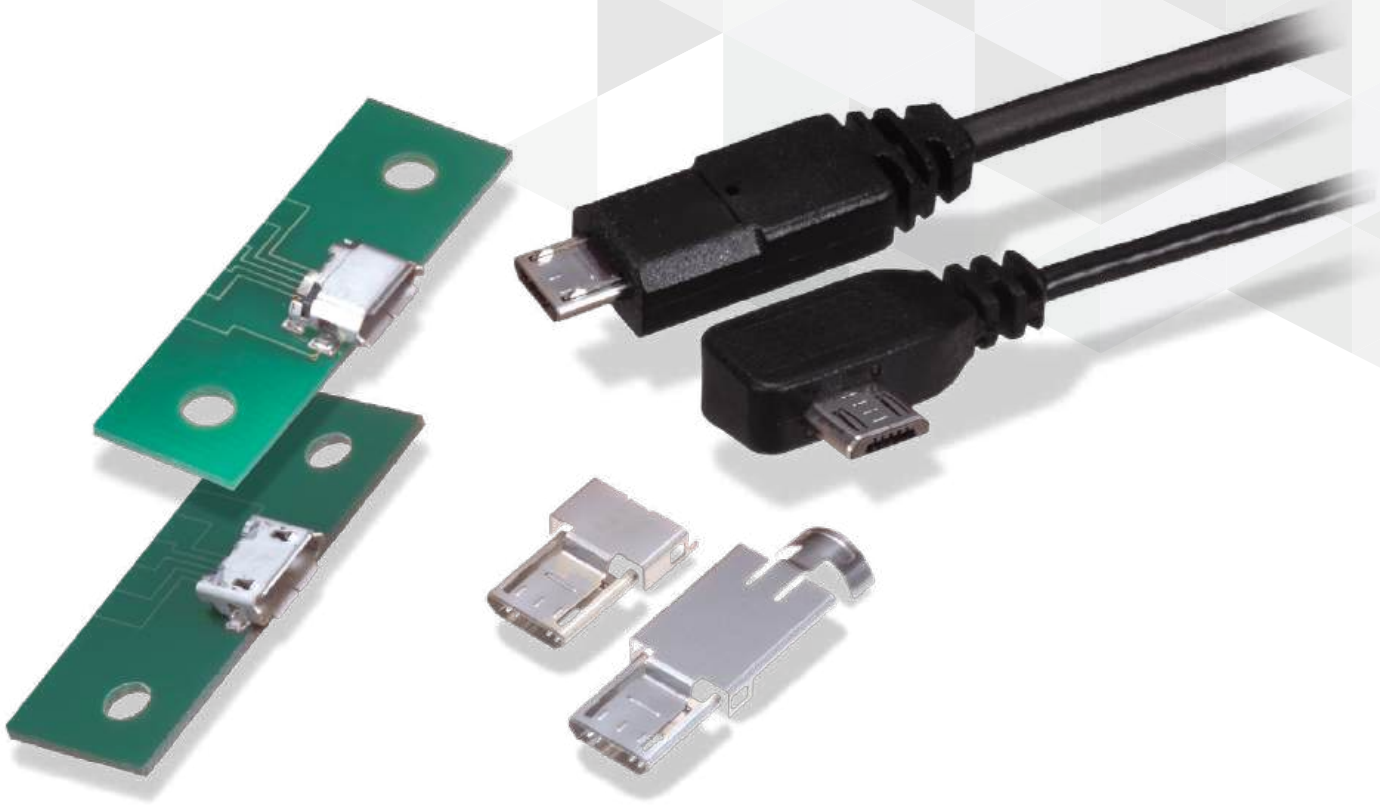

Nov.1.2026 Copyright 2026 HIROSE ELECTRIC CO., LTD. All Rights Reserved.

Product Page
https://www.hirose.com/en/product/series/ZX

Feb. 2026

Downloaded from Arrow.com.

Overview

Extremely small highly reliable connectors complying with physical, electrical and environmental requirements of Micro-USB standard (USB 2.0).
Receptacles and plugs are available in a wide variety of mounting and termination styles, allowing their use in various applications.

Note: Contact us to ascertain whether a TID number has been acquired for an individual product.

Features

1. High Speed Transmission

Compared with the standard Mini-USB connectors, the size of ZX connectors is reduced by approximately 60% while still allowing a high-speed data transfer of 480 Mbps, specified in USB 2.0. It is ideal for external connections of small devices such as mobile phones, digital cameras, and portable music players.

Eye diagram measurement results: Measured with 2.4 m long USB 2.0 cable

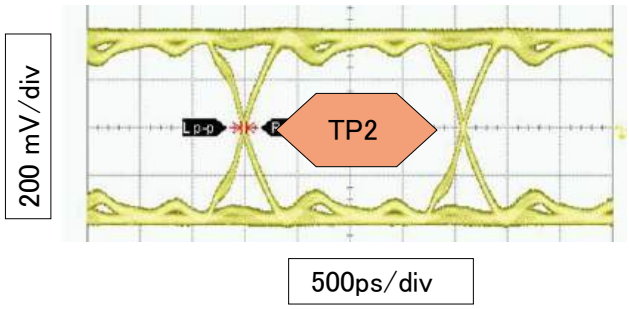

USB 2.0 Hi-Speed (480 Mbps)

2. Receptacle styles

Two interface configurations: Micro-B and Micro-AB in standard, mid-mount and reverse mounting styles. SMT and through-hole (shell) PC board terminations.

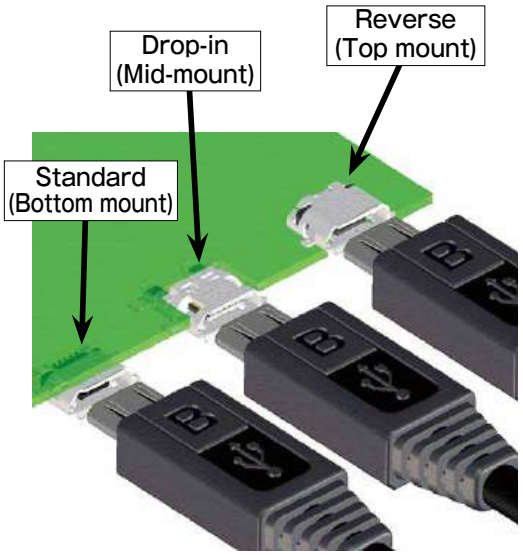

3. Plug styles

Corresponding to the receptacle styles, two interface configurations: Micro-A and Micro-B, with direct wire or PCB wire soldering. The minimized size contributes to a freer over-mold design. Additionally, there are a variety of plugs including cradle plugs and charging plugs in addition to standard type for all connection needs.

Nov.1.2026 Copyright 2026 HIROSE ELECTRIC CO., LTD. All Rights Reserved.

Downloaded from Arrow.com.

4. Smooth mating and unmating

A smooth mating and unmating operation results in less wear and a longer product life. The unique Hirose active latch mechanism produces a reliable and durable connector.
Even after repeated use, the user will experience a smooth click sensation when mating the connectors.

Note: The statement above only applies when using both plug and receptacles made by Hirose Electric.

5. Hirose was the first company to obtain a Micro-USB certification (TID number).

Product Specifications

Rated Current	Per Contact	Contact No. 1, 5	Contact No. 2, 3, 4	Operating Temperature (Note1)	-30 to +85℃
	1A	1.8A	0.5A	Storage Temperature	-30 to +60℃
Rated Voltage	30V AC				

Item	Specification	Conditions
Contact resistance	30mΩ Max.	100mA
Withstanding voltage	No flashover or insulation breakdown	100V AC / 1 minute
Capacitance	2pF Max.	Between adjacent contacts at 1,000Hz (AC voltage)
Durability	Contact resistance: Rise from initial value of 10mΩ Max.	10,000 cycles
Total insertion/removal force	Insertion force: 35N Max., Removal force: 8N Min.	Mated with corresponding connector

Note 1: Includes temperature rise caused by current flow.
Note 2: Information contained in this catalog represents general requirements for this Series. Contact us for the drawings and specifications for a specific part number shown.

Materials / Finish

● Receptacle

Part	Material	Finish	Remarks
Insulator	LCP	Micro-B: Black, Micro-AB: Gray	UL94V-0
Contacts	Copper alloy	Selective gold plated	–
Shell	Stainless steel	Tin alloy plating	–

● Plug

Part	Material	Finish	Remarks
Insulator	LCP	Micro-B: Black, Micro-AB: Gray	UL94V-0
Contacts	Copper alloy	Selective gold plated	–
Lock spring	Stainless steel	–	–
Shell	Stainless steel	Nickel plated or non-plated	–

Note: The above specifications represent typical values for this series. Actual specifications may vary depending on the product.

Nov.1.2026 Copyright 2026 HIROSE ELECTRIC CO., LTD. All Rights Reserved.

Downloaded from Arrow.com.

Product Number Structure

Refer to the chart below when determining the product specifications from the product number.
Please select from the product numbers listed in this catalog when placing orders.

■ Receptacle

ZX 62 RD - B - 5 P # 8
❶ ❷ ❸ ❹ ❺ ❻ ❼ ❽

■ Plug

ZX 40 - B - 5 S # - UNIT
❶ ❷ ❹ ❺ ❻ ❼ ❾

ZX 40 - B - SLD#
❶ ❷ ❹ ❾

❶ Series name	ZX	❹ Mating side configuration	A: Micro-A B: Micro-B AB: Micro-AB
❷ Termination style	20's: Straight, PCB wire soldering 40's: Direct wire soldering 60's: Right-angle, SMT 80's: Cradle SMT	❺ Number of contacts	5
		❻ Contact type	P: Receptacle- Male S: Plug - Female
		❼ Serial No.	
❸ Board mounting style (Receptacles)	Blank: Standard (Bottom mount) D: Standard (Bottom mount), Shell THT R: Reverse (Top mount) RD: Reverse (Top mount), Shell THT M: Drop-in (Mid-mount)	❽ Shell termination style - Receptacles	Blank: SMT 8: THT
		❾ Components-plugs	UNIT: Plug unit SLD#: Plug shield (Note 1)

Note 1: Classifiers such as A, B, and C are entered for #.

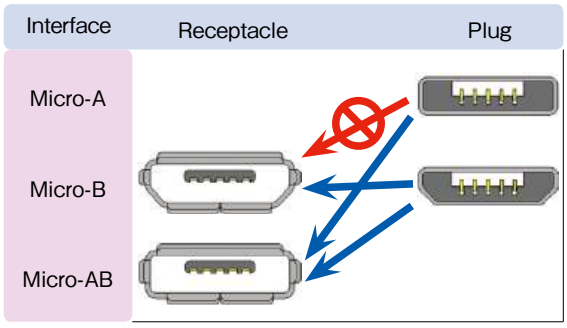

Nov.1.2026 Copyright 2026 HIROSE ELECTRIC CO., LTD. All Rights Reserved.

Downloaded from Arrow.com.

Configurations

	Mating side configuration	Type		Product name	3D Image
Receptacle	Micro-B	Standard	SMT	ZX62-B-5PA(33)	
			SMT + THT	ZX62D-B-5PA8(30)	
		Reverse	SMT	ZX62R-B-5P(30)	
		Drop-in	SMT	ZX62M-B-5P(30)	
	Micro-AB	Standard	SMT	ZX62-AB-5PA(31)	
			SMT + THT	ZX62D-AB-5P8(30)	
		Reverse	SMT + THT	ZX62RD-AB-5P8(30)	
Plug	Micro-B	Direct wire soldering		Assembly (insulator/contacts/lock) : ZX40-B-5S-UNIT(31) Cover-top : ZX40-B-SLDA Cover-bottom : ZX40-SLDB	
		PCB wire soldering (Straight, THT)		Assembly (insulator/contacts/lock) : ZX20-B-5S-UNIT(30) Cover : ZX20-B-SLDC	
	Micro-A	Direct wire soldering		Assembly (insulator/contacts/lock) : ZX40-A-5S-UNIT(30) Cover-top : ZX40-A-SLDA Cover-bottom : ZX40-SLDB	
Cradle	Micro-B	SMT + THT		ZX80-B-5S(30)	With lock 
				ZX80-B-5SA(30)	Without lock 

Note 1: Part numbers in the Plugs section of the above table list the Assembly (insulator/contacts/locks) and the corresponding Shields/Covers.
Note 2: Optional Printed Circuit boards for the Plugs are shown for reference only. Not supplied with applicable connectors.
Note 3: The color of the insulators body in the Assembly (insulator/contacts/lock) shown in the 3D Image column above is blue for clarity. Refer to the Materials for correct colors.

Nov.1.2026 Copyright 2026 HIROSE ELECTRIC CO., LTD. All Rights Reserved.

Downloaded from Arrow.com.

Plug - assembled (not-terminated, without overmold)	Component
ZX40 - Direct wire soldering 	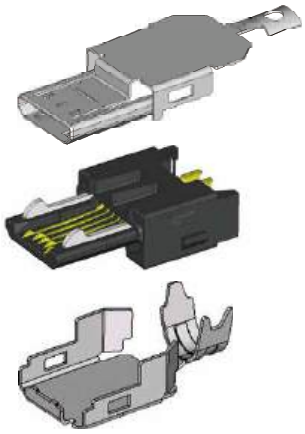 ZX40-#-SLDA Cover-top ZX40-#-5S-UNIT Assembly (insulator/ contacts/lock) ＊No PCB required ZX40-SLDB Cover-bottom
ZX20 - PCB wire soldering 	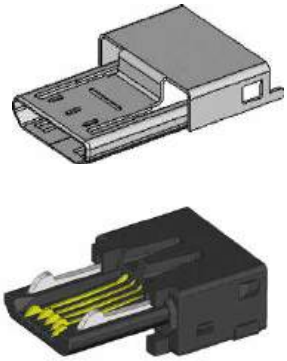 ZX20-#-SLDC Cover ZX20-#-5S-UNIT Assembly (insulator/contacts/lock) ＊Vertical through hole PCB termination

Nov.1.2026 Copyright 2026 HIROSE ELECTRIC CO., LTD. All Rights Reserved.

Downloaded from Arrow.com.

Receptacle, Micro-B

● Standard Type

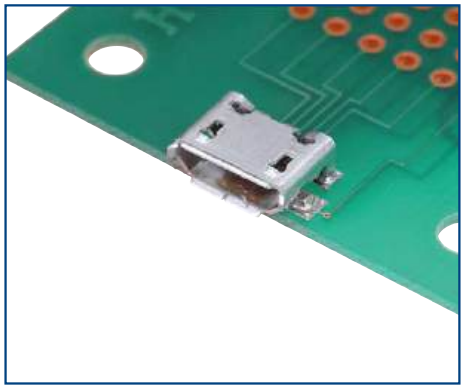

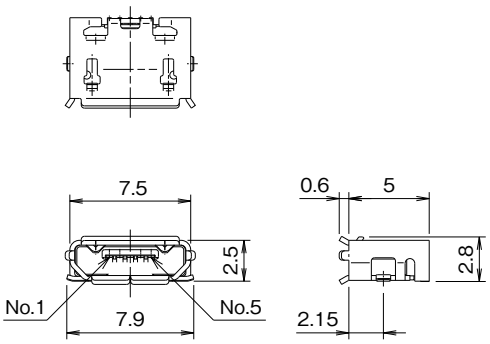

Part No.	HRS No.
ZX62-B-5PA(33)	CL0242-0033-8-33

■ Recommended PCB mounting pattern(from attachment side)

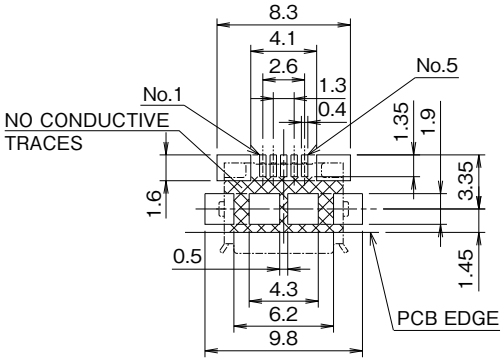

Nov.1.2026 Copyright 2026 HIROSE ELECTRIC CO., LTD. All Rights Reserved.

Downloaded from Arrow.com.

● Standard Shell THT Type

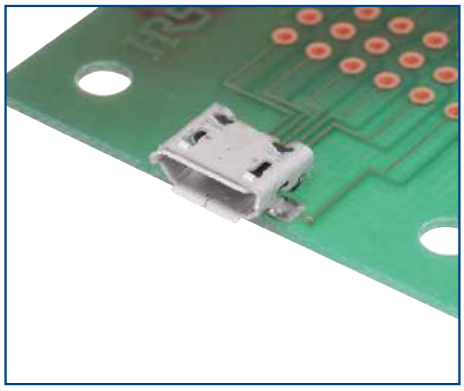

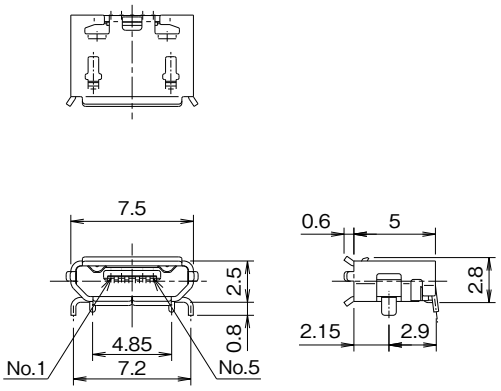

Part No.	HRS No.
ZX62D-B-5PA8(30)	CL0242-0056-3-30

■ Recommended PCB mounting pattern(from attachment side)

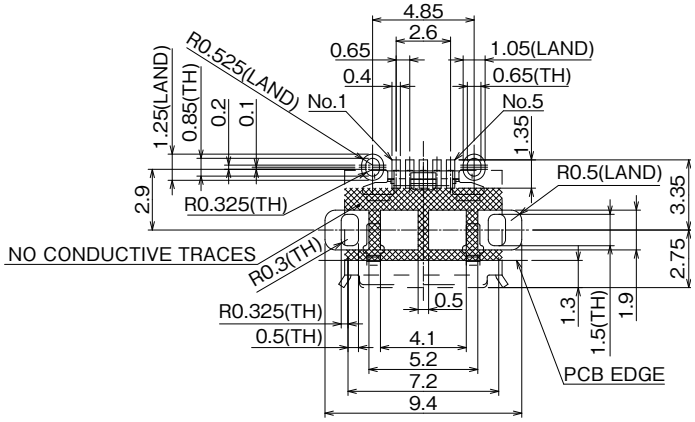

Nov.1.2026 Copyright 2026 HIROSE ELECTRIC CO., LTD. All Rights Reserved.

Downloaded from Arrow.com.

Receptacle, Micro-B

● Reverse Type

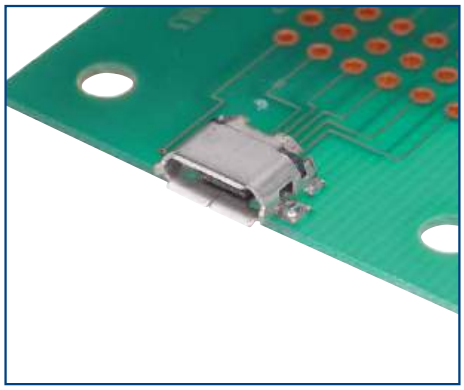

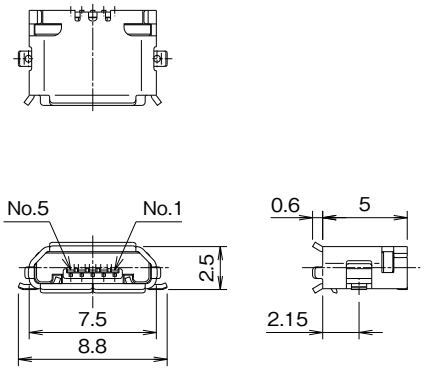

Part No.	HRS No.
ZX62R-B-5P(30)	CL0242-0028-8-30

■ Recommended PCB mounting pattern(from attachment side)

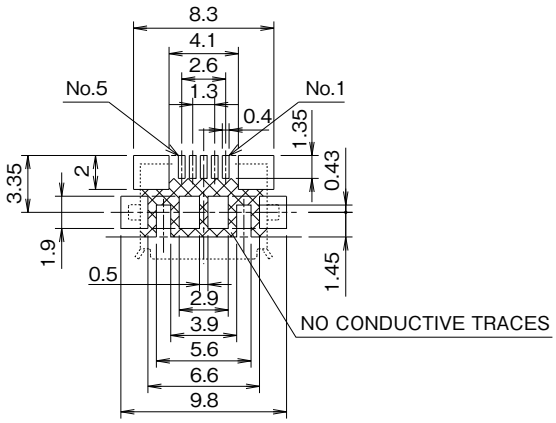

Nov.1.2026 Copyright 2026 HIROSE ELECTRIC CO., LTD. All Rights Reserved.

Downloaded from Arrow.com.

● Drop-in Type

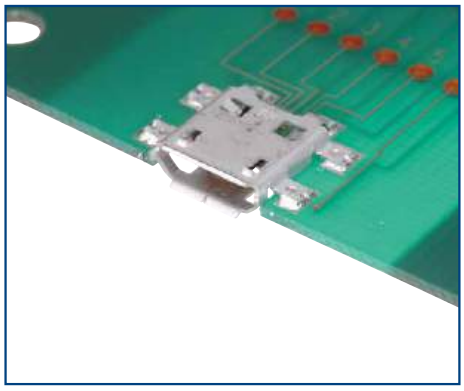

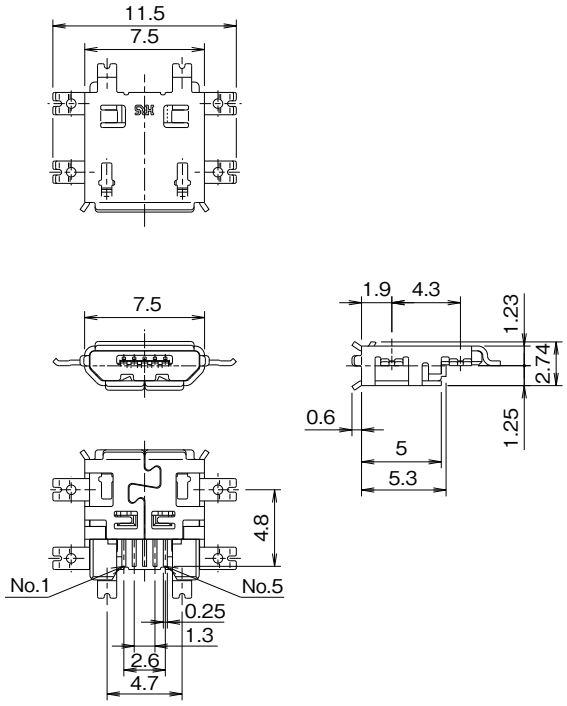

Part No.	HRS No.
ZX62M-B-5P(30)	CL0242-0024-7-30

■ Recommended PCB mounting pattern(from attachment side)

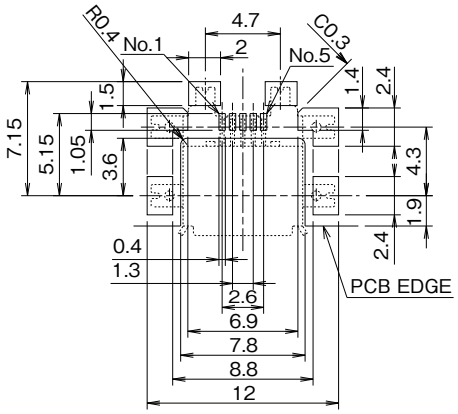

Nov.1.2026 Copyright 2026 HIROSE ELECTRIC CO., LTD. All Rights Reserved.

Downloaded from Arrow.com.

Receptacle, Micro-AB

● Standard Type

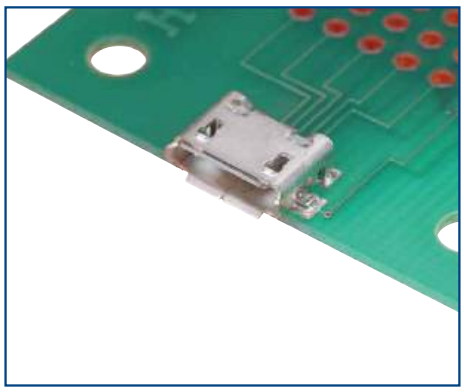

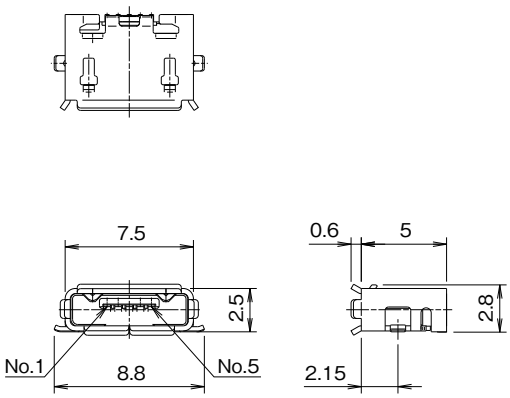

Part No.	HRS No.
ZX62-AB-5PA(31)	CL0242-0045-7-31

■ Recommended PCB mounting pattern(from attachment side)

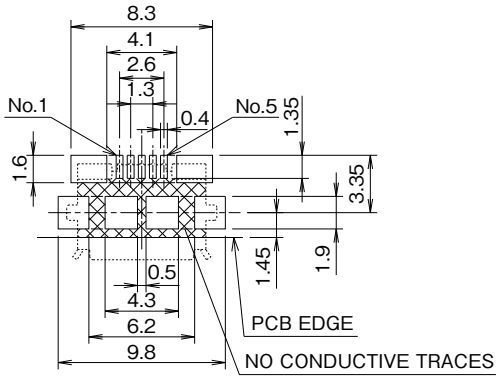

Nov.1.2026 Copyright 2026 HIROSE ELECTRIC CO., LTD. All Rights Reserved.

Downloaded from Arrow.com.

● Standard Shell THT Type

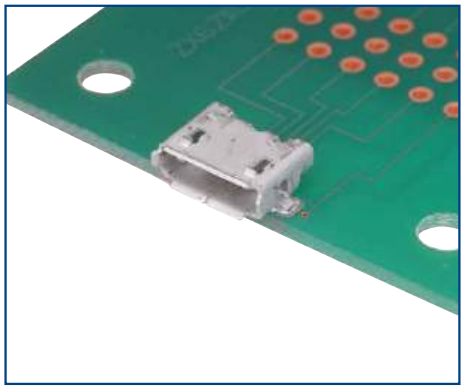

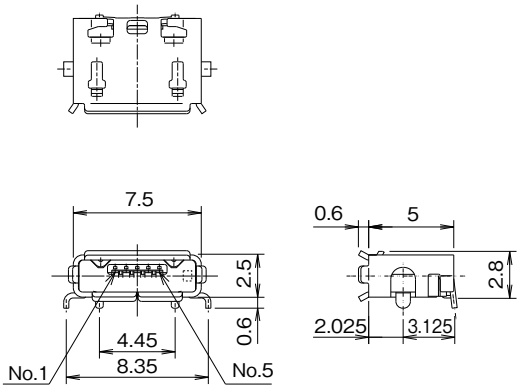

Part No.	HRS No.
ZX62D-AB-5P8(30)	CL0242-0027-5-30

■ Recommended PCB mounting pattern(from attachment side)

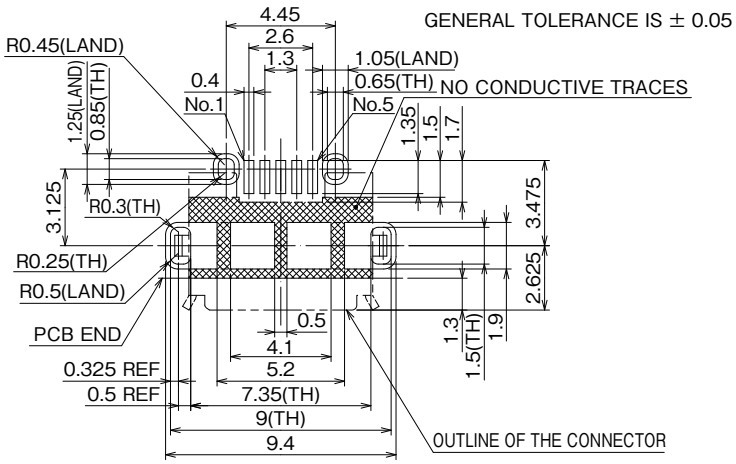

Nov.1.2026 Copyright 2026 HIROSE ELECTRIC CO., LTD. All Rights Reserved.

Downloaded from Arrow.com.

Receptacle, Micro-AB

● Reverse Shell THT Type

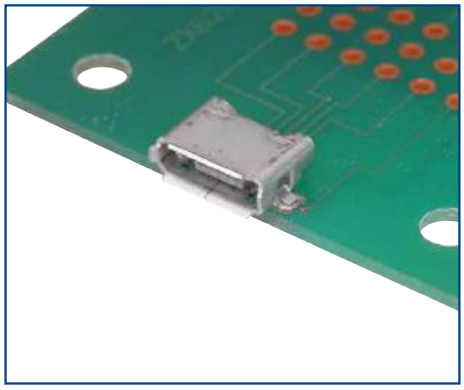

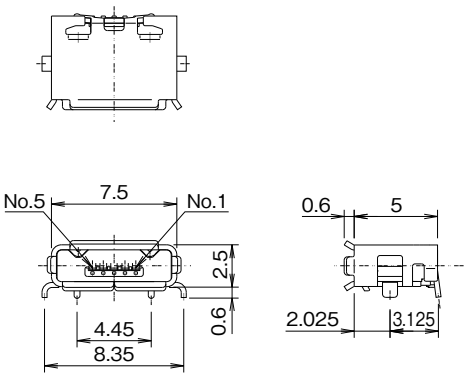

Part No.	HRS No.
ZX62RD-AB-5P8(30)	CL0242-0025-0-30

■ Recommended PCB mounting pattern(from attachment side)

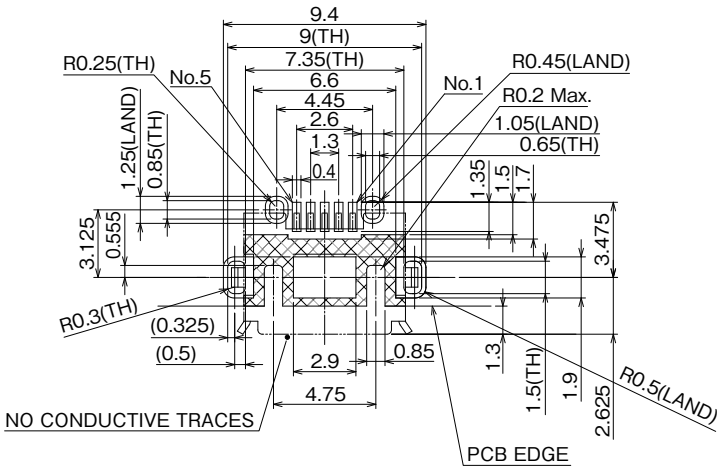

Nov.1.2026 Copyright 2026 HIROSE ELECTRIC CO., LTD. All Rights Reserved.

Downloaded from Arrow.com.

Plug, Micro-B

● Assembly unit (insulator, contacts, lock) - For direct wire soldering



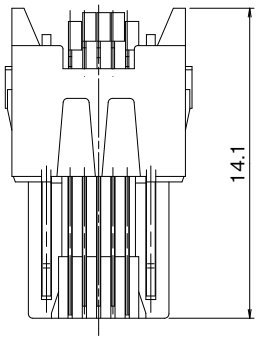



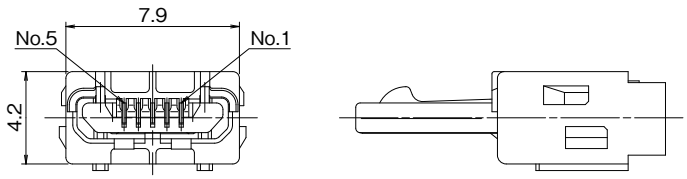

Part No.	HRS No.
ZX40-B-5S-UNIT(31)	CL0242-0002-4-31

Note: Contact HRS for Cable Termination Procedure Manual.

● Cover-top, Shield Plate A - For direct wire soldering



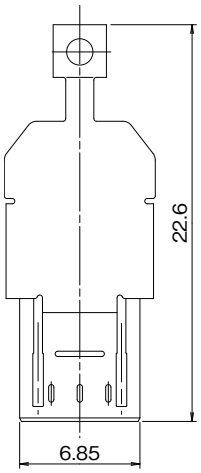

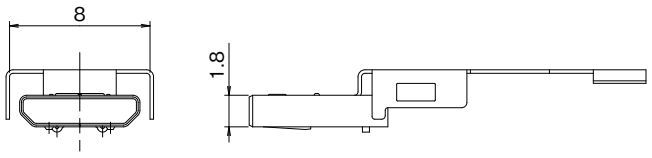

Part No.	HRS No.
ZX40-B-SLDA	CL0242-0003-7-00

Nov.1.2026 Copyright 2026 HIROSE ELECTRIC CO., LTD. All Rights Reserved.

Downloaded from Arrow.com.

Compatible with both Micro-A and Micro-B plugs

● Cover-bottom, Shield Plate B – For direct wire soldering

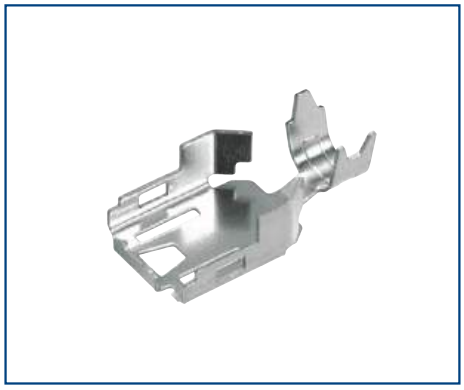

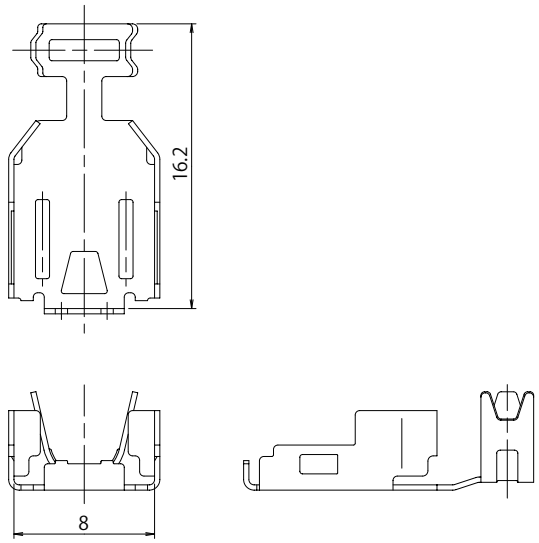

ZX40-SLDB

Part No.	HRS No.	Cable dia.
ZX40-SLDB	CL0242-0004-0-00	ϕ 3.8

● Assembled

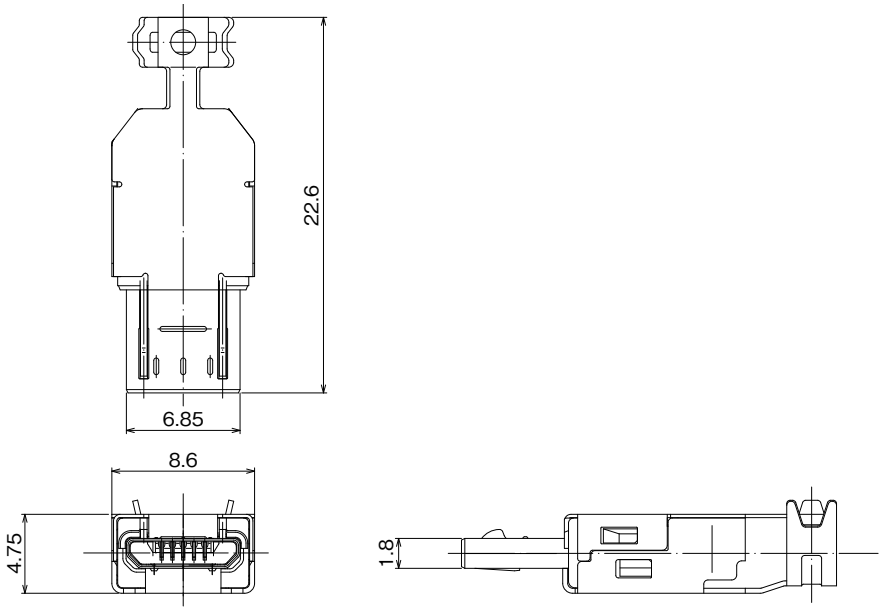

Nov.1.2026 Copyright 2026 HIROSE ELECTRIC CO., LTD. All Rights Reserved.

Downloaded from Arrow.com.

Plug, Micro-B

● Assembly unit (insulator, contacts, lock) - For PCB wire soldering

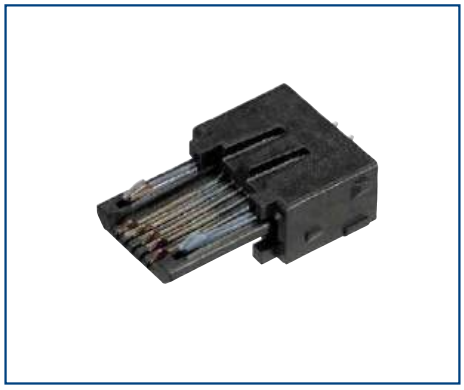

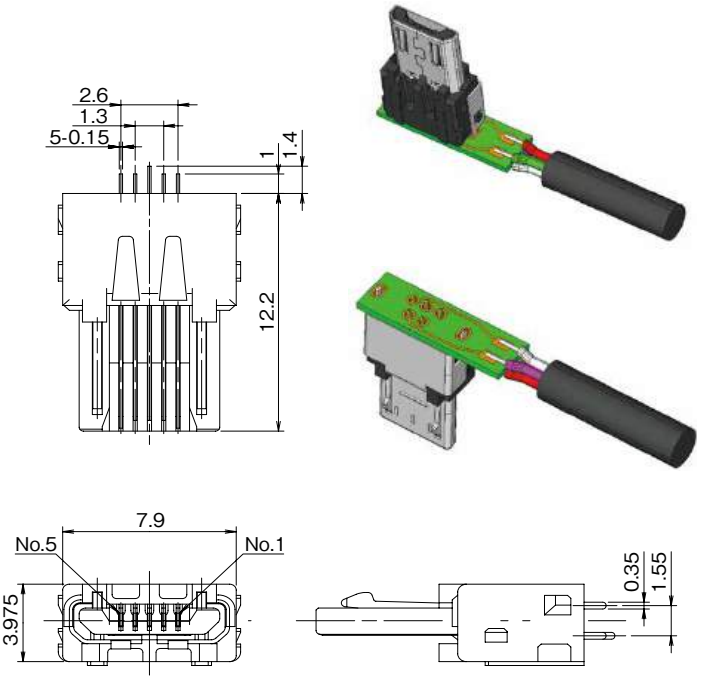

Part No.	HRS No.
ZX20-B-5S-UNIT(30)	CL0242-0012-8-30

Note : Contact HRS for Cable Termination Procedure Manual.

■ PCB mounting pattern (t=0.6)

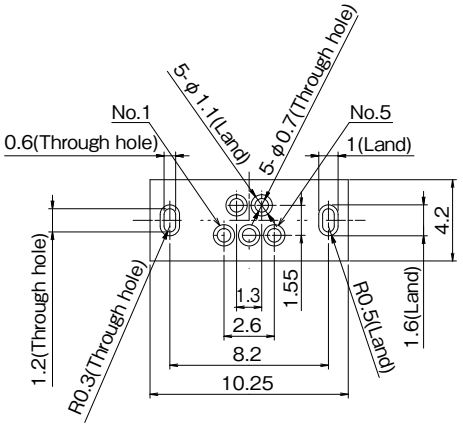

Nov.1.2026 Copyright 2026 HIROSE ELECTRIC CO., LTD. All Rights Reserved.

Downloaded from Arrow.com.

● Cover, Shield Plate C - For PCB wire soldering

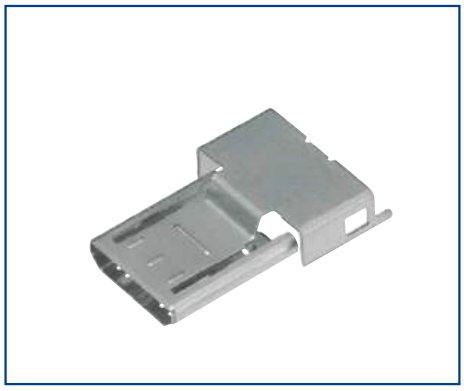

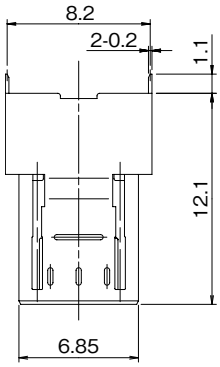

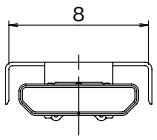

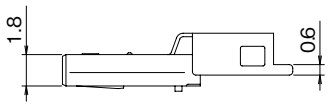

Part No.	HRS No.
ZX20-B-SLDC	CL0242-0022-1-00

● Assembled

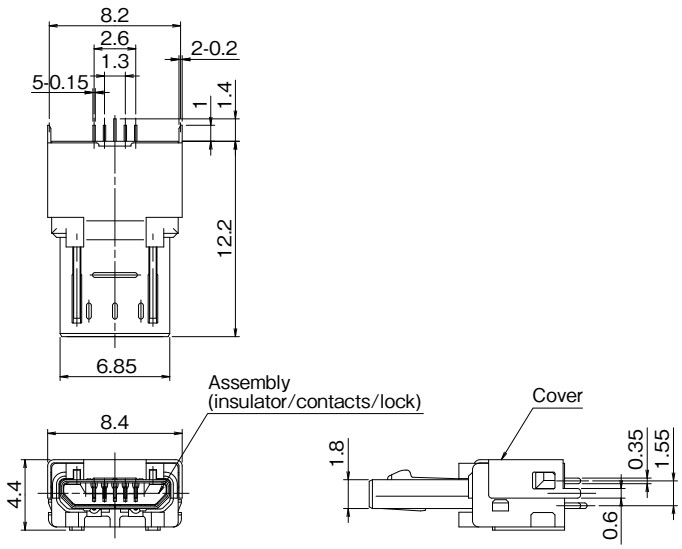

Nov.1.2026 Copyright 2026 HIROSE ELECTRIC CO., LTD. All Rights Reserved.

Downloaded from Arrow.com.

Plug, Micro-A

● Assembly unit (insulator, contacts, lock) - For direct wire soldering

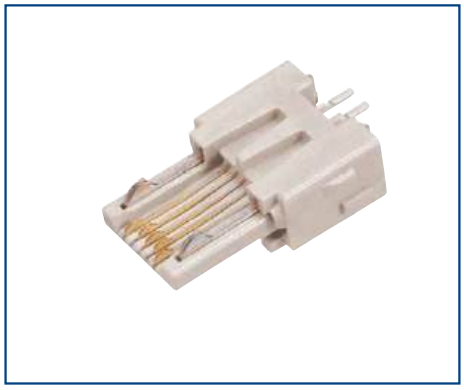

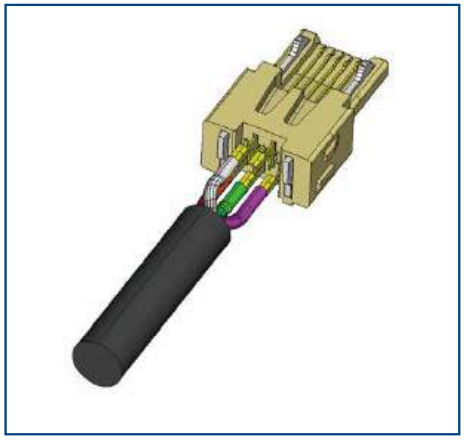

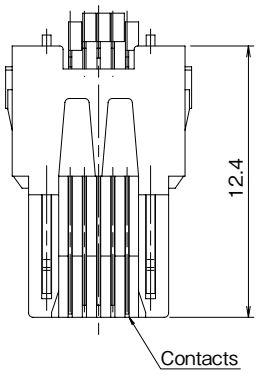

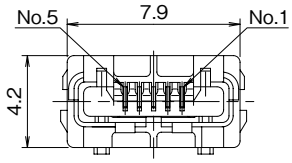

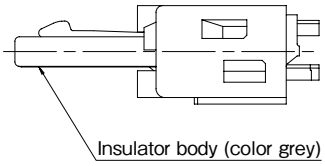

Part No.	HRS No.
ZX40-A-5S-UNIT(30)	CL0242-0010-2-30

Note: Contact HRS for Cable Termination Procedure Manual.

● Cover-top, Shield Plate A - For direct wire soldering

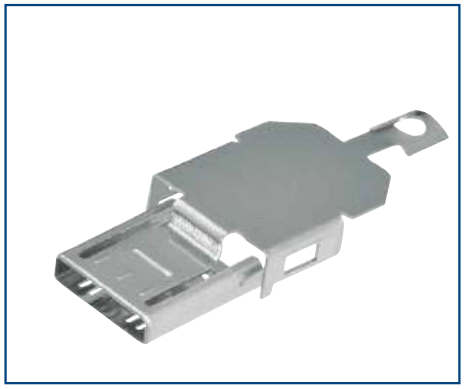

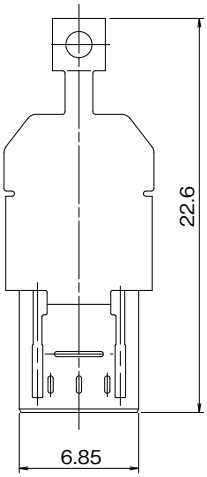

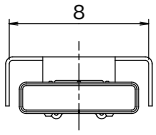

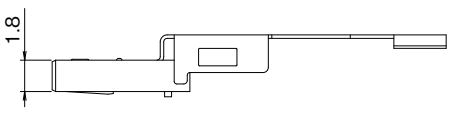

Part No.	HRS No.
ZX40-A-SLDA	CL0242-0011-5-00

Nov.1.2026 Copyright 2026 HIROSE ELECTRIC CO., LTD. All Rights Reserved.

Downloaded from Arrow.com.

Compatible with both Micro-A and Micro-B plugs

● Cover-bottom, Shield Plate B – For direct wire soldering

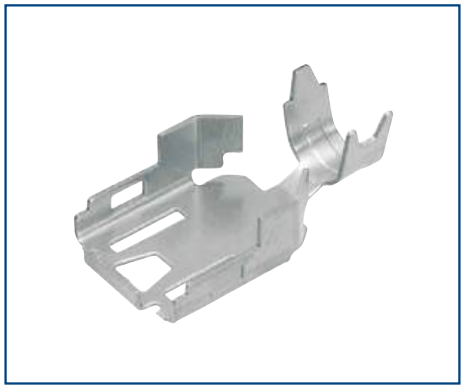

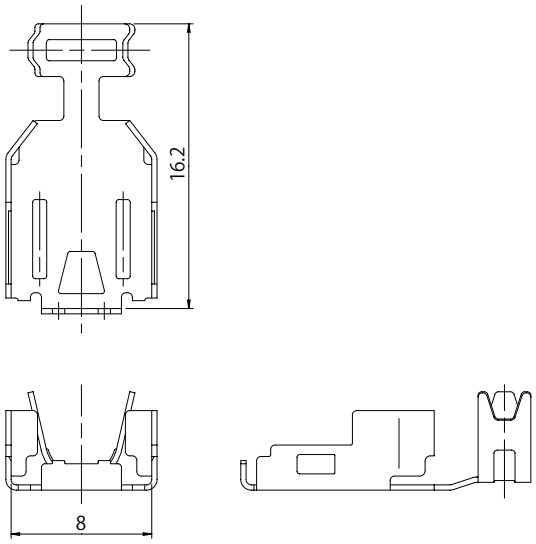

ZX40-SLDB

Part No.	HRS No.	Cable dia.
ZX40-SLDB	CL0242-0004-0-00	ϕ 3.8

● Assembled

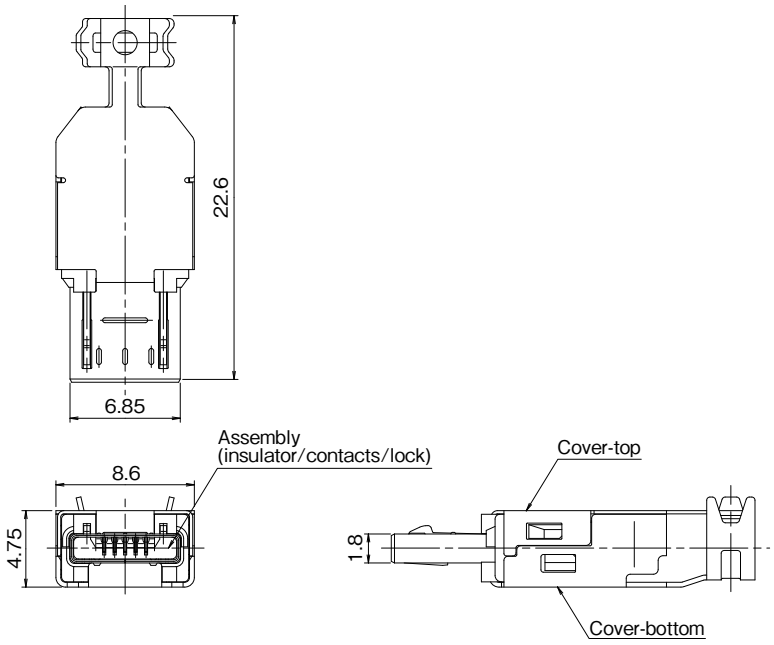

Nov.1.2026 Copyright 2026 HIROSE ELECTRIC CO., LTD. All Rights Reserved.

Downloaded from Arrow.com.

Vertical Plug, Micro-B

● Cradle Type With Lock

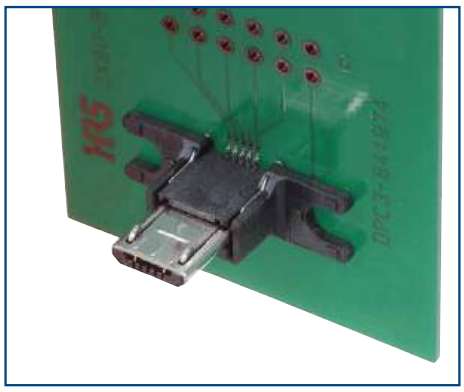

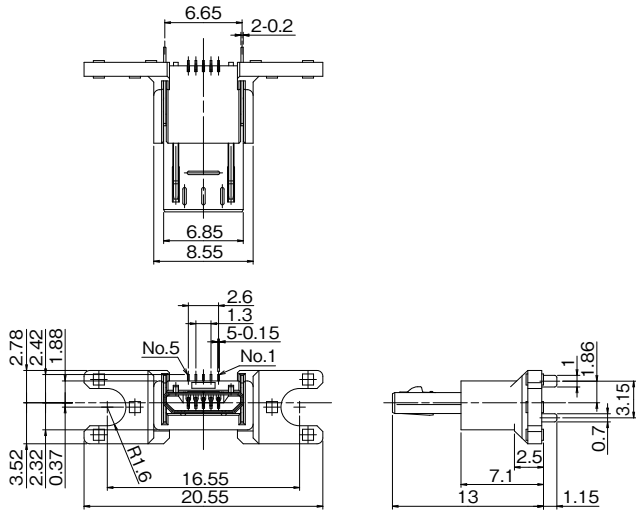

Part No.	HRS No.
ZX80-B-5S(30)	CL0242-0017-1-30

● Cradle Type Without Lock

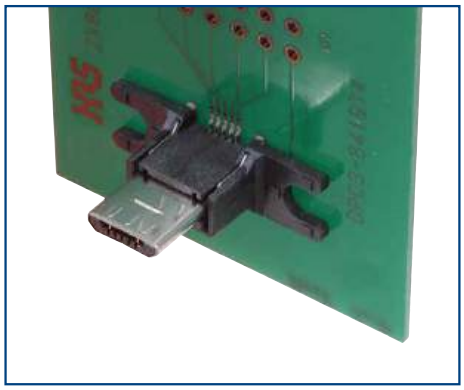

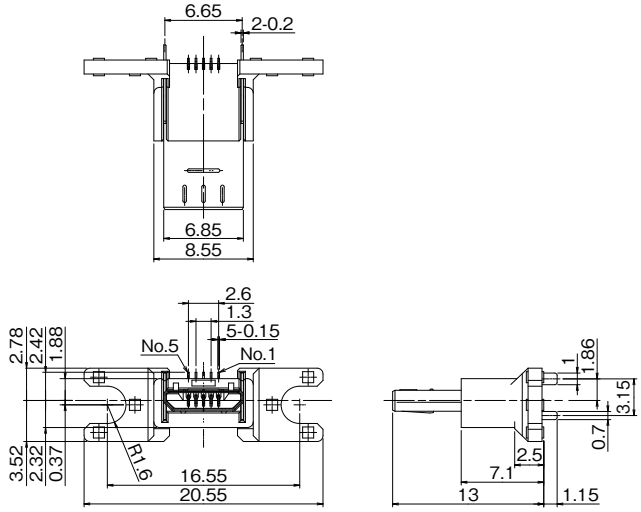

Part No.	HRS No.
ZX80-B-5SA(30)	CL0242-0019-7-30

■ PCB mounting pattern(from attachment side)

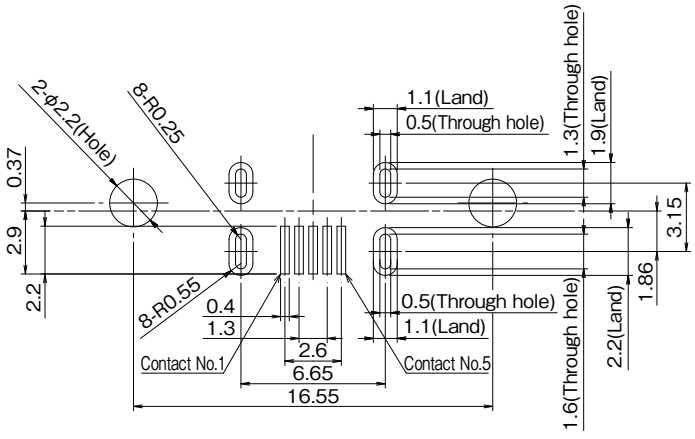

Nov.1.2026 Copyright 2026 HIROSE ELECTRIC CO., LTD. All Rights Reserved.

Downloaded from Arrow.com.

Receptacle Packaging Specifications(JIS C 0806-3)

● Embossed carrier tape dimensions

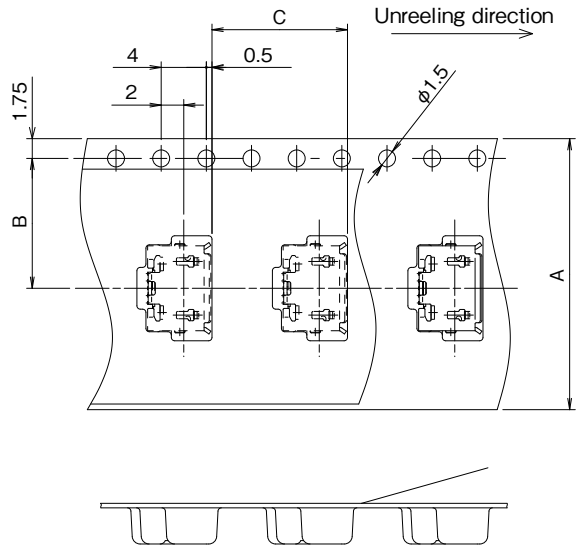

● Reel Dimensions

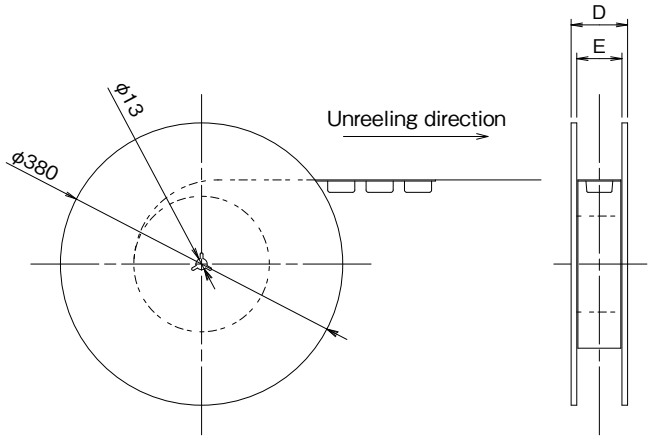

Part No.	A dimension	B dimension	C dimension	D dimension	E dimension
ZX62-B-5PA(33)	24	11.5	8	30.4	24.4
ZX62-AB-5PA(31)	24	11.5	8	30.4	24.4
ZX62M-B-5P(30)	24	11.5	16	30.4	24.4
Other	16	7.5	12	22.4	16.4

Recommended Temperature Profile - Receptacles

● Using lead-free solder paste

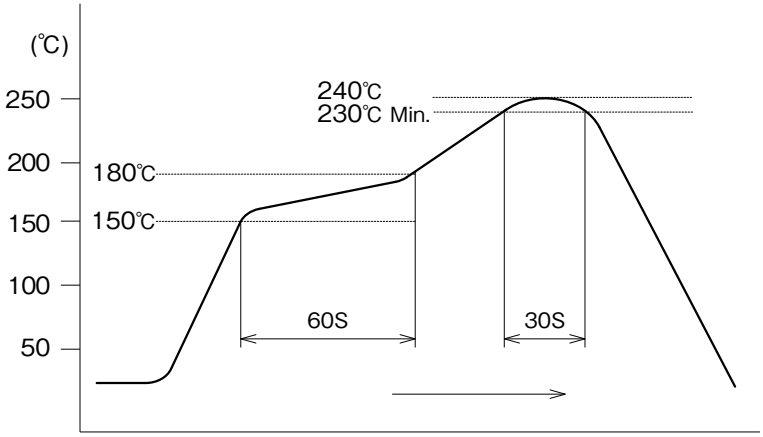

The temperature profile is based on the left conditions. In individual applications the actual temperature may vary, depending on solder paste type, volume/thickness and board size/thickness. Contact your solder paste and equipment manufacturer for specific recommendations.

Note 1: Up to 2 cycles of Reflow soldering are possible under the same conditions, provided that there is a return to normal temperature between the first and second cycle.
Note 2: The temperature profile indicates the board surface temperature at the point of contacts with the connector terminals.

Precautions

1. Exercise care when handling the connectors. Do not subject them to excessive external forces when mating/un-mating.
2. Mate and un-mate as intended, holding by the overmolded body, in the correct direction. Do not un-mate by pulling on the cable. Pull body of plug out invevtical direction when unmating.
3. Some tooling marks may be visible on the surfaces of receptacle (shell/cover). No form/fit or function is affected.
4. Appearance of the surface finishes on the receptacles may vary between production runs. No affect on form, fit or function.

Nov.1.2026 Copyright 2026 HIROSE ELECTRIC CO., LTD. All Rights Reserved.

Downloaded from Arrow.com.

Nov.1.2026 Copyright 2026 HIROSE ELECTRIC CO., LTD. All Rights Reserved.

While Taking into Consideration

Specifications mentioned in this catalog are reference values.
When considering to order or use this product, please review the Drawing and Product Specifications sheets.
Use an appropriate cable when using the connector in combination with cables.
If considering usage of a non-specified cable, please contact your sales representative.
If assembly process is done by jigs & tools which are not identified by Hirose, the warranty of the product may be affected.
If considering usage for below mentioned applications, please contact your sales representative.
In cases where the application will demand a high level of reliability, such as automotive, medical instruments, public infrastructure, aerospace/defense etc. Hirose must review before assurance of reliability can be given.

HIROSE ELECTRIC CO.,LTD. 2-6-3,Nakagawa Chuoh,Tsuzuki-Ku,Yokohama-Shi 224-8540,JAPAN
https://www.hirose.com

※The contents of this catalog are current as of date of 2/2026. Contents are subject to change without notice for the purpose of improvements.
※The HRS logo and "HIROSE" are trademarks of HIROSE ELECTRIC CO., LTD.

Downloaded from Arrow.com.