MICRO SWITCH
a Honeywell Division
FED. MFG. CODE 91929

SWITCH-TOGGLE ABOVE PANEL MOUNT

CATALOG LISTING
102TP82-10

THIS DRAWING COVERS A PROPRIETARY ITEM AND IS THE PROPERTY OF MICRO SWITCH. A DIVISION OF HONEYWELL. THIS DRAWING IS NOT TO BE COPIED OR USED WITHOUT THE APPROVAL OF MICRO SWITCH

CIRCUIT MADE WITH TOGGLE LEVER IN

LUG SIDE	CENTER	OPPOSITE LUG
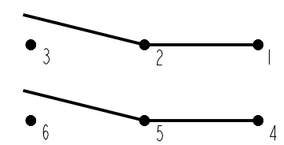	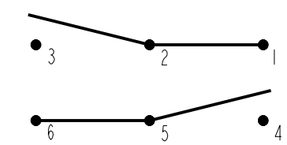	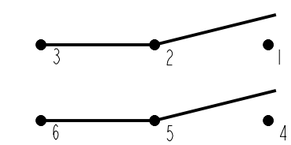
MAINTAINED POSITION	MAINTAINED POSITION	MAINTAINED POSITION

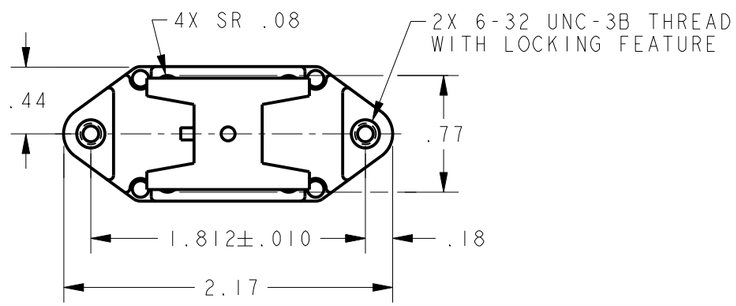

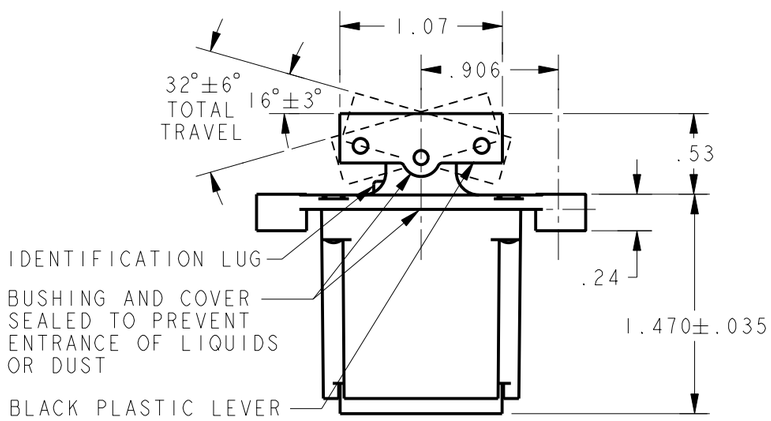

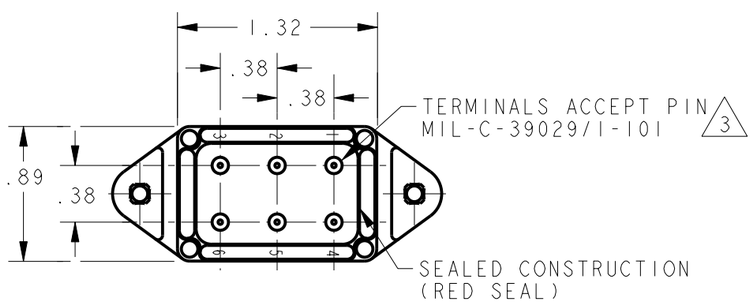

ELECTRICAL DATA

L191 15A 125, 250, 277 VAC
1/2HP 125 VAC
1HP 250, 277 VAC
5A 125 VAC "L"

NOTES
1 - CIRCUIT DESIGNATION AND MICRO SWITCH CATALOG LISTING MARKED ON SIDE OF SWITCH
2 - SWITCHES ARE CAPABLE OF WITHSTANDING A TEMPERATURE OF 160°F CONTINUOUSLY AT FULL RATED LOAD
3 - THE SEALING GROMMET SHALL SEAL ON A SMOOTH WIRE INSULATION OF Ø.040 TO Ø.083 (16-20 GAGE)
4 - UNUSED TERMINAL HOLES MAY BE SEALED WITH PLUGS M83723/28-20

THIRD ANGLE PROJECTION
SCALE FULL
DO NOT SCALE PRINT

UNLESS OTHERWISE SPECIFIED TOLERANCES ARE

ONE PLACE	(.0)	±.030
TWO PLACE	(.00)	±.015
THREE PLACE	(.000)	±.005
ANGLES		±

WEIGHT

ANSI Y14.5M-1982 APPLIES

102TP82-10
CATALOG LISTING
PAGE 1 OF 1
RELEASE NO. PR-20331
REPLACES -
ISSUE 4
CHECK
REVISIONS
A 204633 TRF 08JAN02
CHECK
10DEC01
SAV
CHECK
10DEC01
DRAWN JLH
PTC/CAD 2D

Downloaded from Arrow.com.