HiPerFRED

V_{RRM}	=	1200 V
I_{FAV}	= 2x	60 A
t_{rr}	=	40 ns

High Performance Fast Recovery Diode
Low Loss and Soft Recovery
Common Cathode

Part number

DSEC120-12AK

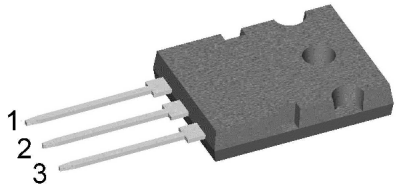

Backside: cathode

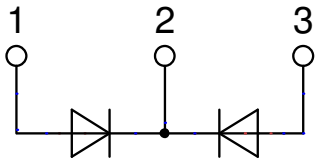

Features / Advantages:

- Planar passivated chips
- Very low leakage current
- Very short recovery time
- Improved thermal behaviour
- Very low Irm-values
- Very soft recovery behaviour
- Avalanche voltage rated for reliable operation
- Soft reverse recovery for low EMI/RFI
- Low Irm reduces:
  - Power dissipation within the diode
  - Turn-on loss in the commutating switch

Applications:

- Antiparallel diode for high frequency switching devices
- Antisaturation diode
- Snubber diode
- Free wheeling diode
- Rectifiers in switch mode power supplies (SMPS)
- Uninterruptible power supplies (UPS)

Package: TO-264

- Industry standard outline
- RoHS compliant
- Epoxy meets UL 94V-0

Disclaimer Notice

Information furnished is believed to be accurate and reliable. However, users should independently evaluate the suitability of and test each product selected for their own applications. Littelfuse products are not designed for, and may not be used in, all applications. Read complete Disclaimer Notice at www.littelfuse.com/disclaimer-electronics.

© 2022 IXYS all rights reserved

Downloaded from Arrow.com.

Fast Diode

Symbol	Definition	Conditions		Ratings min.	typ.	max.	Unit
V_{RSM}	*max. non-repetitive reverse blocking voltage*		T_{VJ} = 25°C			1200	V
V_{RRM}	*max. repetitive reverse blocking voltage*		T_{VJ} = 25°C			1200	V
I_R	*reverse current, drain current*	V_R = 1200 V	T_{VJ} = 25°C			650	µA
		V_R = 1200 V	T_{VJ} = 150°C			2,5	mA
V_F	*forward voltage drop*	I_F = 60 A	T_{VJ} = 25°C			2,66	V
		I_F = 120 A				3,18	V
		I_F = 60 A	T_{VJ} = 150°C			1,81	V
		I_F = 120 A				2,40	V
I_{FAV}	*average forward current*	T_C = 115°C rectangular d = 0.5	T_{VJ} = 175°C			60	A
V_{F0}	*threshold voltage* } *for power loss calculation only*		T_{VJ} = 175°C			1,08	V
r_F	*slope resistance*					9,4	mΩ
R_{thJC}	*thermal resistance junction to case*					0,45	K/W
R_{thCH}	*thermal resistance case to heatsink*				0,15		K/W
P_{tot}	*total power dissipation*		T_C = 25°C			330	W
I_{FSM}	*max. forward surge current*	t = 10 ms; (50 Hz), sine; V_R = 0 V	T_{VJ} = 45°C			500	A
C_J	*junction capacitance*	V_R = 600 V f = 1 MHz	T_{VJ} = 25°C		30		pF
I_{RM}	*max. reverse recovery current*	I_F = 60 A; V_R = 600 V $-di_F/dt$ = 200 A/µs	T_{VJ} = 25°C		13		A
			T_{VJ} = 100°C		20		A
t_{rr}	*reverse recovery time*		T_{VJ} = 25°C		80		ns
			T_{VJ} = 100°C		220		ns

© 2022 IXYS all rights reserved

Downloaded from Arrow.com.

Package TO-264			Ratings			
Symbol	**Definition**	**Conditions**	**min.**	**typ.**	**max.**	**Unit**
I_{RMS}	*RMS current*	per terminal [1)]			70	A
T_{VJ}	*virtual junction temperature*		-55		175	°C
T_{op}	*operation temperature*		-55		150	°C
T_{stg}	*storage temperature*		-55		150	°C
Weight				10		g
M_D	*mounting torque*		0,8		1,2	Nm
F_C	*mounting force with clip*		20		120	N

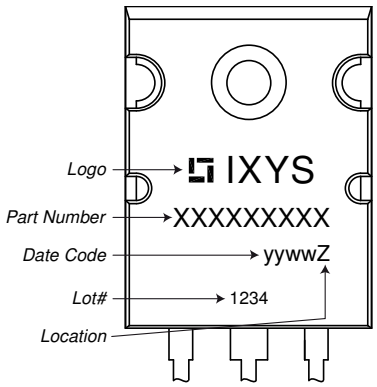

Ordering	Ordering Number	Marking on Product	Delivery Mode	Quantity	Code No.
Standard	DSEC120-12AK	DSEC120-12AK	Tube	25	498653

Equivalent Circuits for Simulation

** on die level* $T_{VJ} = 175°C$

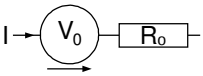

		Fast Diode	
$V_{0\,max}$	*threshold voltage*	1,08	V
$R_{0\,max}$	*slope resistance **	6,8	mΩ

© 2022 IXYS all rights reserved

Downloaded from Arrow.com.

Outlines TO-264

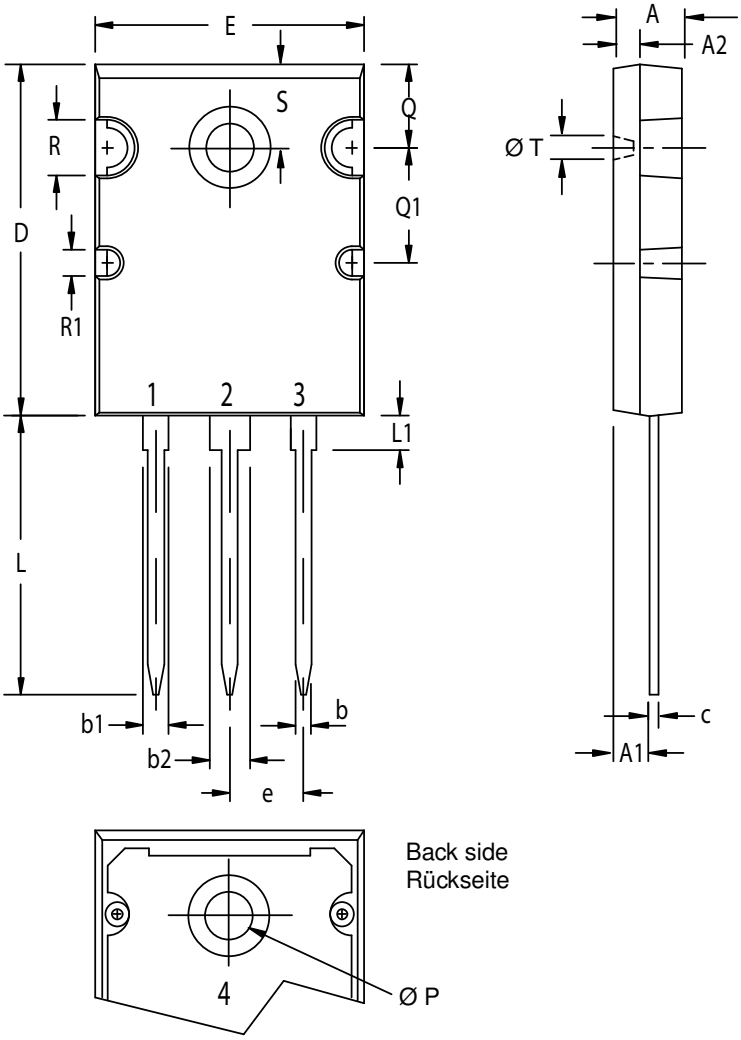

SYM	INCHES		MILLIMETERS	
	MIN	MAX	MIN	MAX
A	0.190	0.202	4.82	5.13
A1	0.100	0.114	2.54	2.89
A2	0.079	0.083	2.00	2.10
b	0.044	0.056	1.12	1.42
b1	0.094	0.106	2.39	2.69
b2	0.114	0.122	2.90	3.09
c	0.021	0.033	0.53	0.83
D	1.020	1.030	25.91	26.16
E	0.780	0.786	19.81	19.96
e	5.46 BSC		.215 BSC	
J	0.000	0.010	0.00	0.25
K	0.000	0.010	0.00	0.25
L	0.800	0.820	20.32	20.83
L1	0.090	0.102	2.29	2.59
P	0.125	0.144	3.17	3.66
Q	0.239	0.247	6.07	6.27
Q1	0.330	0.342	8.38	8.69
R	0.150	0.170	3.81	4.32
R1	0.070	0.090	1.78	2.29
S	0.238	0.248	6.04	6.30
T	0.062	0.072	1.57	1.83

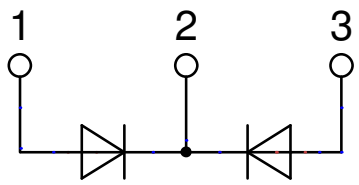

© 2022 IXYS all rights reserved

Downloaded from Arrow.com.

Fast Diode

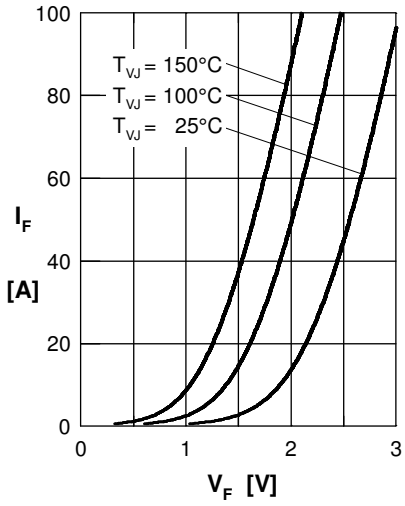

Fig. 1 Forward current I_F versus V_F

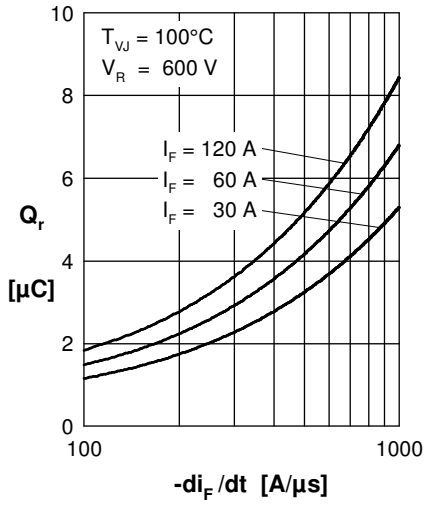

Fig. 2 Typ. reverse recov. charge Q_r versus $-di_F/dt$

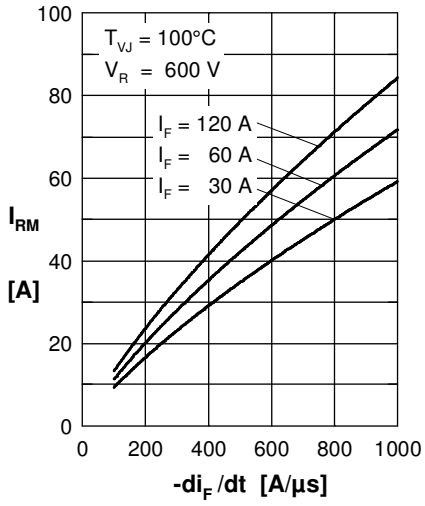

Fig. 3 Typ. peak reverse current I_{RM} versus $-di_F/dt$

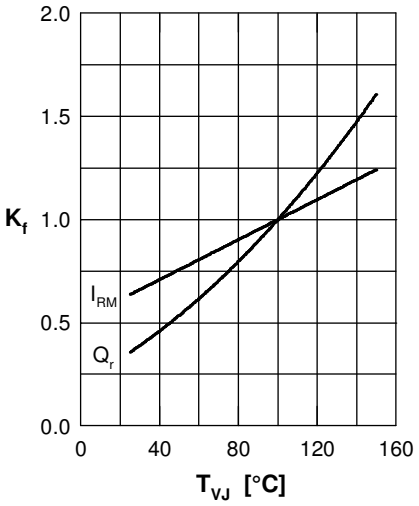

Fig. 4 Typ. dynamic parameters Q_r, I_{RM} versus T_{VJ}

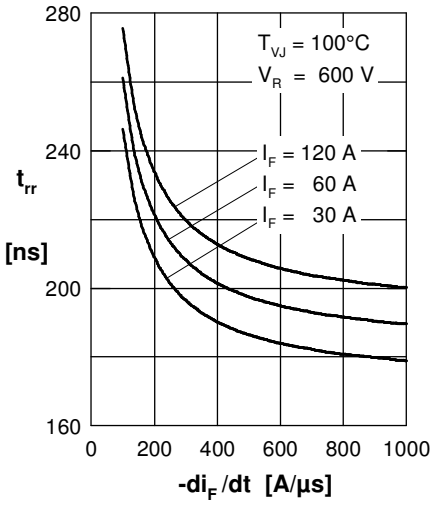

Fig. 5 Typ. recovery time t_{rr} versus $-di_F/dt$

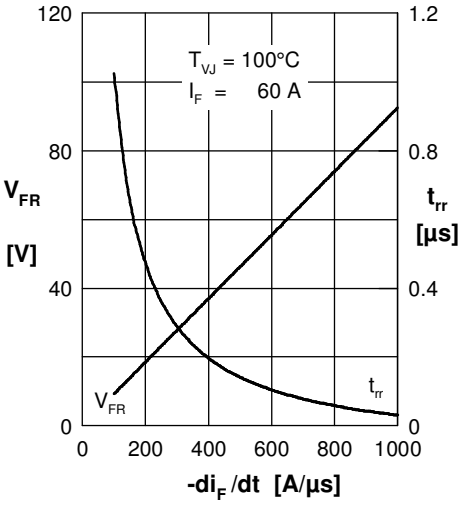

Fig. 6 Typ. peak forward voltage V_{FR} and t_{fr} versus di_F/dt

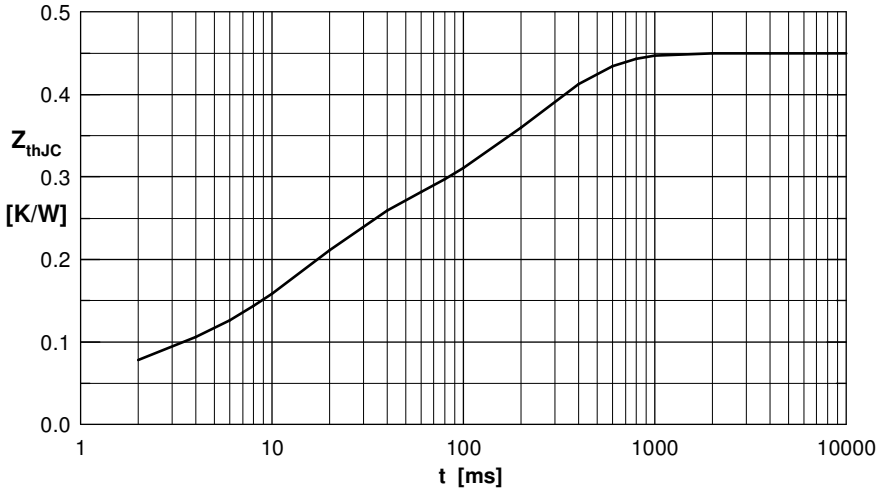

Fig. 7 Transient thermal resistance junction to case

Constants for Z_{thJC} calculation:

i	R_{thi} (K/W)	t_i (s)
1	0.0050	0.0001
2	0.0550	0.0010
3	0.1750	0.0140
4	0.2150	0.2300

© 2022 IXYS all rights reserved

Downloaded from Arrow.com.