Features

- Small Surface Mounting Type
- Epoxy Meets UL 94 V-0 Flammability Rating
- Moisure Sensitivity Level 1
- Lead Free Finish/RoHS Compliant ("P" Suffix Designates RoHS Compliant. See Ordering Information)
- Halogen Free Available Upon Request By Adding Suffix "-HF"

100 mA Schottky Rectifier 30 Volts

Maximum Ratings

- Operating Junction Temperature Range: 125°C
- Storage Temperature Range: -55°C to +150°C
- Thermal Resistance: 1000°C/W Junction to Ambient

MCC Part Number	Device Marking	Maximum Recurrent Peak Reverse Voltage	Maximum DC Blocking Voltage
RB520S-30L2	E1	30V	30V

Electrical Characteristics @ 25°C Unless Otherwise Specified

Mean Rectifying Current	I_O	100mA	
Peak Forward Surge Current	I_{FSM}	0.5A	t=8.3ms
Forward Voltage	V_F	0.45V(Max)	I_F=10mA;
Reverse Current	I_R	0.5μA(Max)	V_R=10V

DFN1006-2L

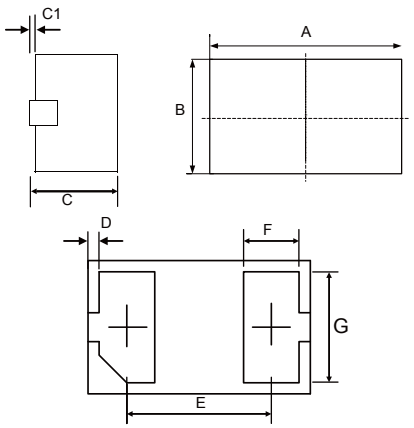

DIMENSIONS					
DIM	INCHES		MM		NOTE
	MIN	MAX	MIN	MAX	
A	0.037	0.041	0.95	1.05	
B	0.022	0.026	0.55	0.65	
C	0.016	0.020	0.40	0.50	
C1	-----	0.002	-----	0.05	
D	0.001	0.003	0.02	0.08	
E	0.026BSC		0.65BSC		
F	0.008	0.012	0.20	0.30	
G	0.018	0.022	0.45	0.55	

Downloaded from Arrow.com.

Curve Characteristics

Fig. 1 - Forward Characteristics

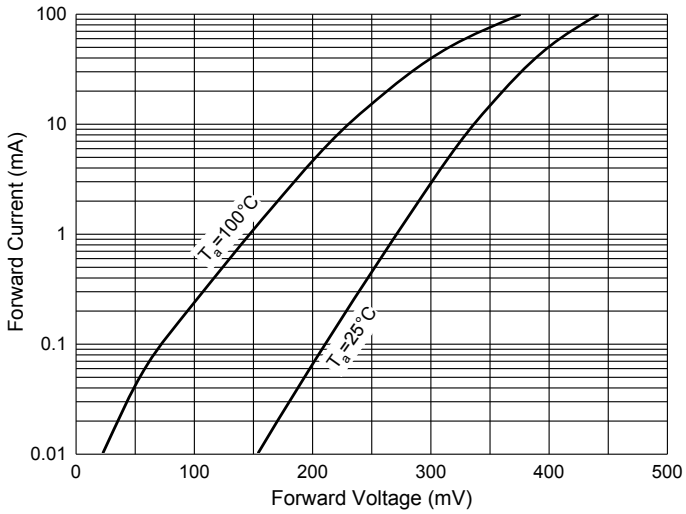

Fig. 2 - Reverse Characteristics

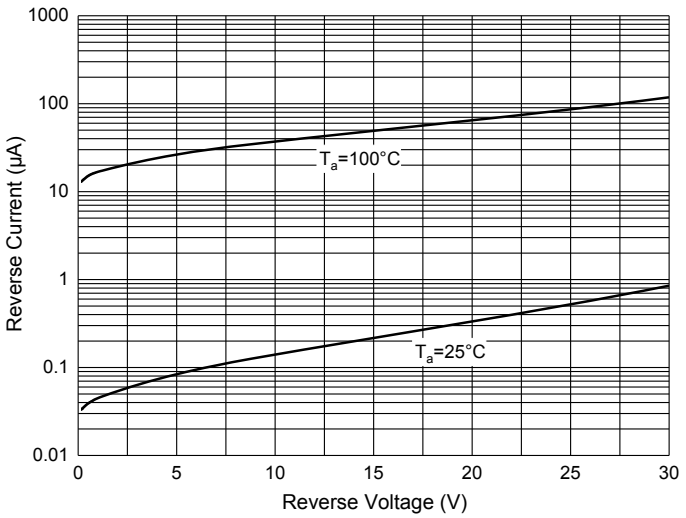

Fig. 3 - Capacitance Characteristics

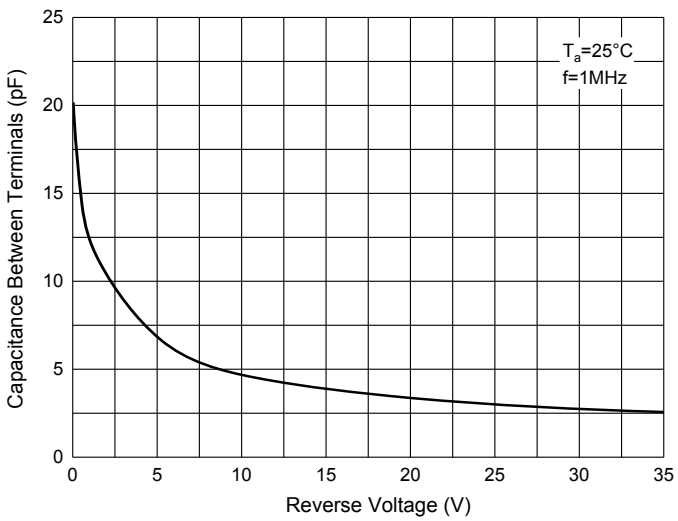

Fig. 4 - Power Derating Curve

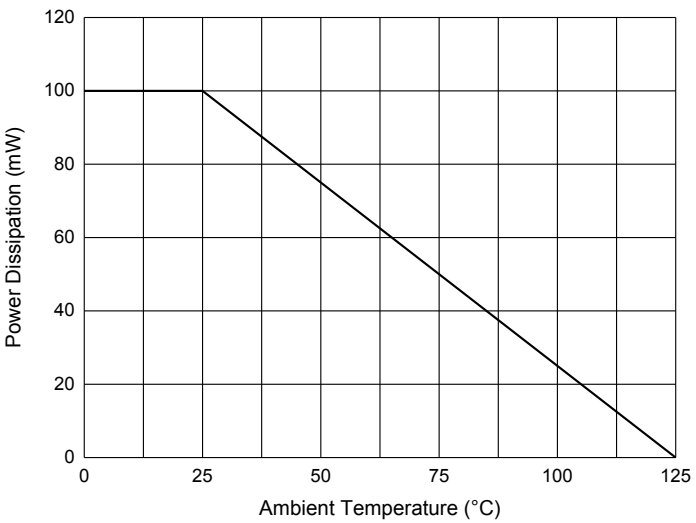

Downloaded from Arrow.com.

Ordering Information

Device	Packing
Part Number-TP	Tape&Reel;10Kpcs/Reel

Note : Adding "-HF" Suffix For Halogen Free, eg. Part Number-TP-HF

IMPORTANT NOTICE
Micro Commercial Components Corp. reserves the right to make changes without further notice to any product herein to make corrections, modifications , enhancements , improvements , or other changes . ***Micro Commercial Components Corp*** . does not assume any liability arising out of the application or use of any product described herein; neither does it convey any license under its patent rights ,nor the rights of others . The user of products in such applications shall assume all risks of such use and will agree to hold ***Micro Commercial Components Corp*** . and all the companies whose products are represented on our website, harmless against all damages.
LIFE SUPPORT
MCC's products are not authorized for use as critical components in life support devices or systems without the express written approval of Micro Commercial Components Corporation.
CUSTOMER AWARENESS
Counterfeiting of semiconductor parts is a growing problem in the industry. Micro Commercial Components (MCC) is taking strong measures to protect ourselves and our customers from the proliferation of counterfeit parts. MCC strongly encourages customers to purchase MCC parts either directly from MCC or from Authorized MCC Distributors who are listed by country on our web page cited below. Products customers buy either from MCC directly or from Authorized MCC Distributors are genuine parts, have full traceability, meet MCC's quality standards for handling and storage. **MCC will not provide any warranty coverage or other assistance for parts bought from Unauthorized Sources**. MCC is committed to combat this global problem and encourage our customers to do their part in stopping this practice by buying direct or from authorized distributors.

Downloaded from Arrow.com.