IMXRT1040CEC

i.MX RT1040 Crossover Processors for Consumer Products

Rev. 5 — 20 November 2025

Product data sheet

MIMXRT1041DFP6B
MIMXRT1042DFP6B
MIMXRT1043DFP6B
MIMXRT1041DJM6B
MIMXRT1042DJM6B
MIMXRT1046DFQ6B
MIMXRT1043DJM6B

Package Information

Plastic Package

169-pin BGA, 9 x 9 mm, 0.65 mm pitch

169-pin BGA, 11 x 11 mm, 0.8 mm pitch

169-pin BGA, 7 x 7 mm, 0.5 mm pitch

Ordering Information

See Table 1

Downloaded from Arrow.com.

1 i.MX RT1040 Introduction

The i.MX RT1040 is a new processor family featuring NXP's advanced implementation of the Arm Cortex®-M7 core, which operates at speeds up to 600 MHz to provide high CPU performance and best real-time response.

The i.MX RT1040 processor has 512 KB on-chip RAM, which can be flexibly configured as TCM or general purpose on-chip RAM. The i.MX RT1040 integrates advanced power management module with DCDC and LDO that reduces complexity of external power supply and simplifies power sequencing. The i.MX RT1040 also provides various memory interfaces, including SDRAM, RAW NAND FLASH, NOR FLASH, SD/eMMC, Quad SPI, and a wide range of other interfaces for connecting peripherals, such as WLAN, Bluetooth™, GPS, and displays. The i.MX RT1040 has rich audio and video features, including LCD display, basic 2D graphics, SPDIF, and I2S audio interface. The i.MX RT1040 has analog interfaces, such as ADC and ACMP.

The i.MX RT1040 is specifically useful for applications such as:

- Industrial Human Machine Interfaces (HMI)
- Motor Control
- Home Appliance

Note: *RT1046 has 1 MB on-chip RAM. 512 KB can be flexibly configured as TCM or general purpose on-chip RAM, while the other 512 KB is general-purpose on-chip RAM.*
Note: *The RT1043 adds an additional 512KB OCRAM based on the RT1042.*

1.1 Features

The i.MX RT1040 processors are based on Arm Cortex-M7 Core Platform, which has the following features:

- Supports single Arm Cortex-M7 Core with:
  - 32 KB L1 Instruction Cache
  - 32 KB L1 Data Cache
  - Full featured Floating Point Unit (FPU) with support of the VFPv5 architecture
  - Support the Armv7-M Thumb instruction set
- Integrated MPU, up to 16 individual protection regions
- Tightly coupled GPIOs, operating at the same frequency as Arm Core
- Up to 512 KB I-TCM and D-TCM in total
- Frequency of 600 MHz
- Cortex M7 CoreSight™ components integration for debug
- Frequency of the core, as per Table 11.

The SoC-level memory system consists of the following additional components:

- Boot ROM (128 KB)
- On-chip RAM (512 KB)
  - 512 KB FlexRAM shared between ITCM/DTCM and OCRAM
- For RT1043 and RT1046:
  - On-chip RAM (1 MB)
  - 512 KB FlexRAM shared between ITCM/DTCM and OCRAM
  - Dedicate 512 KB OCRAM
- External memory interfaces:
  - 8/16-bit SDRAM, up to SDRAM-133/SDRAM-166

All information provided in this document is subject to legal disclaimers.

© 2025 NXP B.V. All rights reserved.

Downloaded from Arrow.com.

  - 8/16-bit SLC NAND FLASH, with ECC handled in software
  - SD/eMMC
  - SPI NOR/NAND FLASH
  - Parallel NOR FLASH with XIP support
  - Two single/dual channel Quad SPI FLASH with XIP support
- Timers and PWMs:
  - Two General Programmable Timers (GPT)
    - 4-channel generic 32-bit resolution timer for each
    - Each support standard capture and compare operation
  - Four Periodical Interrupt Timers (PIT)
    - Generic 32-bit resolution timer
    - Periodical interrupt generation
  - Four Quad Timers (QTimer)
    - 4-channel generic 16-bit resolution timer for each
    - Each support standard capture and compare operation
    - Quadrature decoder integrated
  - Four FlexPWMs
    - Up to 8 individual PWM channels per each
    - 16-bit resolution PWM suitable for Motor Control applications
  - Four Quadrature Encoder/Decoders

Each i.MX RT1040 processor enables the following interfaces to external devices (some of them are muxed and not available simultaneously):

- Display Interface:
  - Parallel RGB LCD interface
    - Support 8/16/24 bit interface
    - Support up to WXGA resolution
    - Support Index color with 256 entry x 24 bit color LUT
    - Smart LCD display with 8/16-bit MPU/8080 interface

  Note: *RT1046 doesn't support the display interface.*
- Audio:
  - S/PDIF input and output
  - Three synchronous audio interface (SAI) modules supporting I2S, AC97, TDM, and codec/DSP interfaces
  - MQS interface for medium quality audio via GPIO pads
- Generic 2D graphics engine:
  - BitBlit
  - Flexible image composition options—alpha, chroma key
  - Porter-duff blending
  - Image rotation (90°, 180°, 270°)

All information provided in this document is subject to legal disclaimers.

© 2025 NXP B.V. All rights reserved.

Downloaded from Arrow.com.

  - Image size
  - Color space conversion
  - Multiple pixel format support (RGB, YUV444, YUV422, YUV420, YUV400)
  - Standard 2D-DMA operation

  Note: *RT1046 doesn't support Generic 2D fraphics engine.*

- Connectivity:
  - One USB 2.0 OTG controllers with integrated PHY interfaces
  - Two Ultra Secure Digital Host Controller (uSDHC) interfaces
    - MMC 4.5 compliance with HS200 support up to 200 MB/sec
    - SD/SDIO 3.0 compliance with 200 MHz SDR signaling to support up to 100 MB/sec
    - Support for SDXC (extended capacity)
  - One 10/100M Ethernet controller with support for IEEE1588

    Note: *RT1046 suppports 2 Ethernet controller with support for IEEE1588.*
  - Eight universal asynchronous receiver/transmitter (UARTs) modules
  - Four I^2C modules
  - Three SPI modules
    Note: *RT1046 supports 4 SPI module.*
  - Two FlexCAN modules
  - One FlexCAN (with Flexible Data-Rate supported)
  - Three FlexIO modules
- GPIO and Pin Multiplexing:
  - General-purpose input/output (GPIO) modules with interrupt capability
  - Input/output multiplexing controller (IOMUXC) to provide centralized pad control

The i.MX RT1040 processors integrate advanced power management unit and controllers:

- Full PMIC integration, including on-chip DCDC and LDO
- Temperature sensor with programmable trim points
- GPC hardware power management controller

The i.MX RT1040 processors support the following system debug:

- Arm CoreSight debug and trace architecture
- Trace Port Interface Unit (TPIU) to support off-chip real-time trace
- Cross Triggering Interface (CTI)
- Support for 5-pin (JTAG) and SWD debug interfaces

The i.MX RT1040 processors support the following analog interfaces:

- Two Analog-Digital-Converters (ADC), 12-channel in total

  Note: *RT1046 supports 15 channel.*
- Four Analog Comparators (ACMP)

Security functions are enabled and accelerated by the following hardware:

- High Assurance Boot (HAB)

All information provided in this document is subject to legal disclaimers.

© 2025 NXP B.V. All rights reserved.

Downloaded from Arrow.com.

- Data Co-Processor (DCP):
  - AES-128, ECB, and CBC mode
  - SHA-1 and SHA-256
  - CRC-32
- Bus Encryption Engine (BEE)
  - AES-128, ECB, and CTR mode
  - On-the-fly QSPI Flash decryption
- True random number generation (TRNG)
- Secure Non-Volatile Storage (SNVS)
  - Secure real-time clock (RTC)
  - Zero Master Key (ZMK)
- Secure JTAG Controller (SJC)

Note:

The actual feature set depends on the part numbers as described in Table 1. Functions such as display , connectivity interfaces, and security features are not offered on all derivatives.

1.2 Ordering information

Table 1 provides examples of orderable part numbers covered by this Data Sheet.

Table 1. Ordering information

Part Number	Features		Package	Junction Temperature T_j (°C)
MIMXRT1041DFP6B	• 600 MHz, commercial grade for general purpose, with MPU/FPU • eDMA • Boot ROM (128 KB) • FlexRAM (512 KB) • SEMC • GPT x2 • 4-channel PIT • Qtimer x4 • PWM x4 • ENC x4 • WDOG x4 • No LCD/PXP • SPDIF x1 • SAI x3	• Ethernet x1 • UART x8 • I^2C x4 • FlexSPI x2 • CAN x2 • FlexCAN (with Flexible Data-Rate supported) • FlexIO x3 • 114 GPIOs (112 tightly coupled) • HAB/DCP/BEE • TRNG • SNVS • SJC • ADC x2 • ACMP x4	9 x 9 mm, 0.65 mm pitch, 169-pin BGA	0 to +95 °C

Table continues on the next page...

All information provided in this document is subject to legal disclaimers.

© 2025 NXP B.V. All rights reserved.

Downloaded from Arrow.com.

Table 1. Ordering information...*continued*

Part Number	Features		Package	Junction Temperature T_j (°C)
	• MQS x1 • USB OTG x1 • eMMC 4.5/SD 3.0 x2	• DCDC • Temperature sensor • GPC hardware power management controller		
MIMXRT1042DFP6B	• 600 MHz, commercial grade for general purpose, with MPU/FPU • eDMA • Boot ROM (128 KB) • FlexRAM (512 KB) • SEMC • GPT x2 • 4-channel PIT • Qtimer x4 • PWM x4 • ENC x4 • WDOG x4 • LCD/PXP • SPDIF x1 • SAI x3 • MQS x1 • USB OTG x1 • eMMC 4.5/SD 3.0 x2	• Ethernet x1 • UART x8 • I^2C x4 • FlexSPI x2 • CAN x2 • FlexCAN (with Flexible Data-Rate supported) • FlexIO x3 • 114 GPIOs (112 tightly coupled) • HAB/DCP/BEE • TRNG • SNVS • SJC • ADC x2 • ACMP x4 • DCDC • Temperature sensor • GPC hardware power management controller	9 x 9 mm, 0.65 mm pitch, 169-pin BGA	0 to +95 °C
MIMXRT1043DFP6B	• 600 MHz, commercial grade for general purpose, with MPU/FPU • eDMA • Boot ROM (128 KB) • FlexRAM (512 KB) • On-chip RAM (512 KB) • SEMC • GPT x2	• Ethernet x1 • UART x8 • I^2C x4 • FlexSPI x2 • CAN x2 • FlexCAN (with Flexible Data-Rate supported) • FlexIO x3 • 114 GPIOs (112 tightly coupled)	9 x 9 mm, 0.65 mm pitch, 169-pin BGA	0 to +95 °C

Table continues on the next page...

All information provided in this document is subject to legal disclaimers.

© 2025 NXP B.V. All rights reserved.

Downloaded from Arrow.com.

Table 1. Ordering information...*continued*

Part Number	Features		Package	Junction Temperature T_j (°C)
	• 4-channel PIT • Qtimer x4 • PWM x4 • ENC x4 • WDOG x4 • LCD/PXP • SPDIF x1 • SAI x3 • MQS x1 • USB OTG x1 • eMMC 4.5/SD 3.0 x2	• HAB/DCP/BEE • TRNG • SNVS • SJC • ADC x2 • ACMP x4 • DCDC • Temperature sensor • GPC hardware power management controller		
MIMXRT1042DJM6B	• 600 MHz, commercial grade for general purpose, with MPU/FPU • eDMA • Boot ROM (128 KB) • FlexRAM (512 KB) • SEMC • GPT x2 • 4-channel PIT • Qtimer x4 • PWM x4 • ENC x4 • WDOG x4 • LCD/PXP • SPDIF x1 • SAI x3 • MQS x1 • USB OTG x1 • eMMC 4.5/SD 3.0 x2	• Ethernet x1 • UART x8 • I^2C x4 • FlexSPI x2 • CAN x2 • FlexCAN (with Flexible Data-Rate supported) • FlexIO x3 • 114 GPIOs (112 tightly coupled) • HAB/DCP/BEE • TRNG • SNVS • SJC • ADC x2 • ACMP x4 • DCDC • Temperature sensor • GPC hardware power management controller	11 x 11 mm, 0.8 mm pitch, 169-pin BGA	0 to +95 °C

Table continues on the next page...

All information provided in this document is subject to legal disclaimers.

© 2025 NXP B.V. All rights reserved.

Downloaded from Arrow.com.

Table 1. Ordering information...*continued*

Part Number	Features		Package	Junction Temperature T_j (°C)
MIMXRT1041DJM6B	• 600 MHz, commercial grade for general purpose, with MPU/FPU • eDMA • Boot ROM (128 KB) • FlexRAM (512 KB) • SEMC • GPT x2 • 4-channel PIT • Qtimer x4 • PWM x4 • ENC x4 • WDOG x4 • No LCD/PXP • SPDIF x1 • SAI x3 • MQS x1 • USB OTG x1 • eMMC 4.5/SD 3.0 x2	• Ethernet x1 • UART x8 • I^2C x4 • FlexSPI x2 • CAN x2 • FlexCAN (with Flexible Data-Rate supported) • FlexIO x3 • 114 GPIOs (112 tightly coupled) • HAB/DCP/BEE • TRNG • SNVS • SJC • ADC x2 • ACMP x4 • DCDC • Temperature sensor • GPC hardware power management controller	11 x 11 mm, 0.8 mm pitch, 169-pin BGA	0 to +95 °C
MIMXRT1046DFQ6B	• 600 MHz, commercial grade for general purpose, with MPU/FPU • eDMA • Boot ROM (128 KB) • FlexRAM (512KB) • On-chip RAM (512 KB) • SEMC • GPT x2 • 4-channel PIT • Qtimer x4 • PWM x4 • ENC x4	• Ethernet x2 • UART x8 • I^2C x4 • SPIx4 • FlexSPI x2 • CAN x2 • FlexCAN (with Flexible Data-Rate supported) • FlexIO x3 • 115 GPIOs • HAB/DCP/BEE • TRNG • SNVS	169-pin BGA, 7 x 7mm, 0.5 mm pitch	0 to +95 °C

Table continues on the next page...

All information provided in this document is subject to legal disclaimers.

© 2025 NXP B.V. All rights reserved.

Downloaded from Arrow.com.

Table 1. Ordering information...*continued*

Part Number	Features		Package	Junction Temperature T_j (°C)
	• WDOG x4 • SPDIF x1 • No LCD/PXP • SPDIF x1 • SAI x3 • MQS x1 • USB OTG x1 • eMMC 4.5/SD 3.0 x2	• SJC • ADC x2 • ACMP x4 • DCDC • Temperature sensor • GPC hardware power management controller		
MIMXRT1043DJM6B	• 600 MHz, commercial grade for general purpose, with MPU/FPU • eDMA • Boot ROM (128 KB) • FlexRAM (512 KB) • On-chip RAM (512 KB) • SEMC • GPT x2 • 4-channel PIT • Qtimer x4 • PWM x4 • ENC x4 • WDOG x4 • LCD/PXP • SPDIF x1 • SAI x3 • MQS x1 • USB OTG x1 • eMMC 4.5/SD 3.0 x2	• Ethernet x1 • UART x8 • I^2C x4 • FlexSPI x2 • CAN x2 • FlexCAN (with Flexible Data-Rate supported) • FlexIO x3 • 114 GPIOs (112 tightly coupled) • HAB/DCP/BEE • TRNG • SNVS • SJC • ADC x2 • ACMP x4 • DCDC • Temperature sensor • GPC hardware power management controller	11 x 11 mm, 0.8 mm pitch, 169-pin BGA	0 to +95 °C

Figure 1 describes the part number nomenclature so that characteristics of a specific part number can be identified (for example, cores, frequency, temperature grade, fuse options, and silicon revision). The primary characteristic which describes which data sheet applies to a specific part is the temperature grade (junction) field.

Ensure to have the proper data sheet for specific part by verifying the temperature grade (junction) field and matching it to the proper data sheet. If there are any questions, visit the web page nxp.com/IMXRT or contact an NXP representative for details.

All information provided in this document is subject to legal disclaimers.

© 2025 NXP B.V. All rights reserved.

Downloaded from Arrow.com.

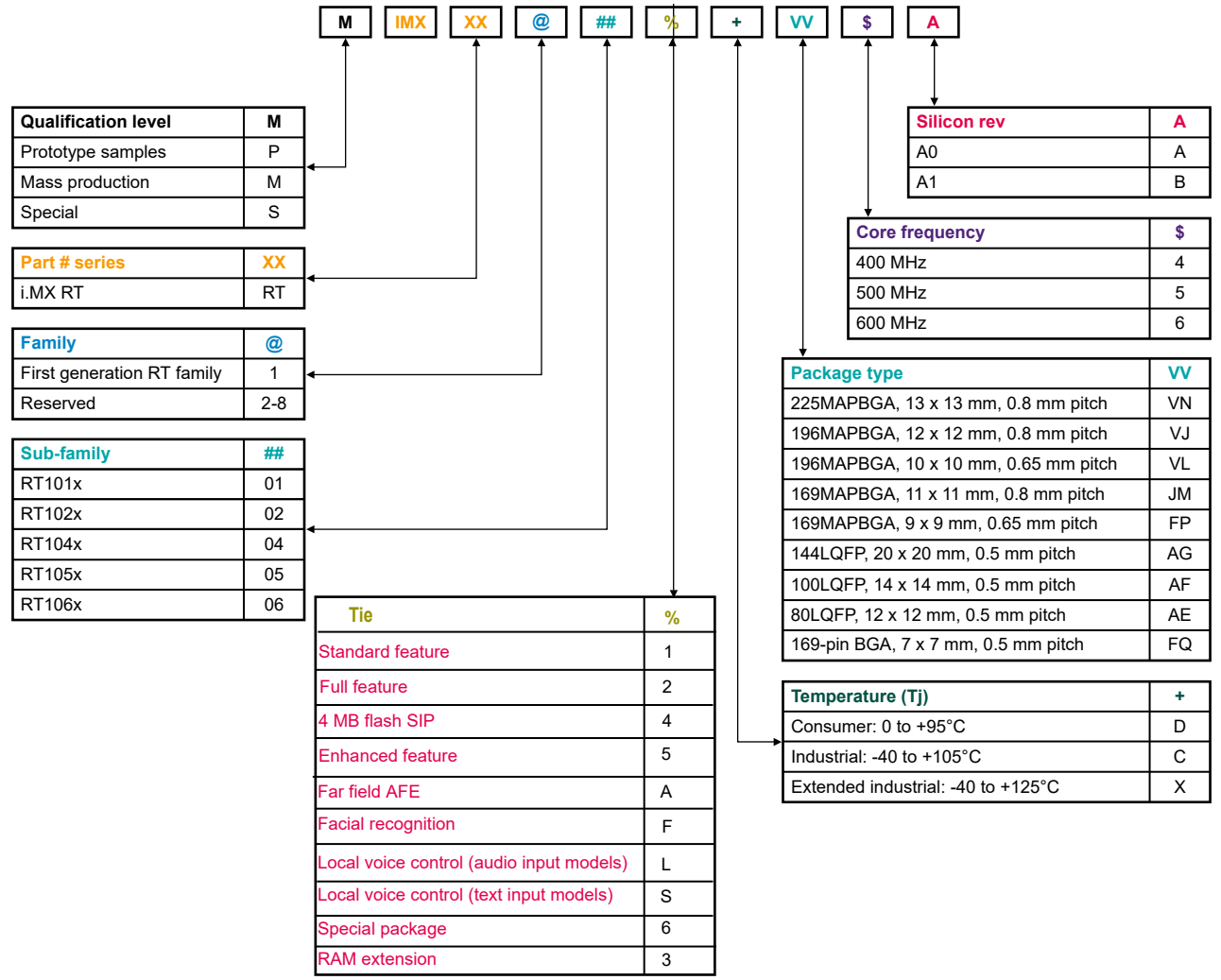

Figure 1. Part number nomenclature—i.MX RT10XX family

2 Architectural Overview

The following subsections provide an architectural overview of the i.MX RT1040 processor system.

2.1 Block diagram

Figure 2 shows the functional modules in the i.MX RT1040 processor system.[1].

Figure 3 shows the functional modules in the i.MXRT1043 processor system.

Figure 4shows the functional modules in the i.MXRT1046 processor system.

[1] Some modules shown in this block diagram are not offered on all derivatives. See Table 11 for details.

All information provided in this document is subject to legal disclaimers.

© 2025 NXP B.V. All rights reserved.

Downloaded from Arrow.com.

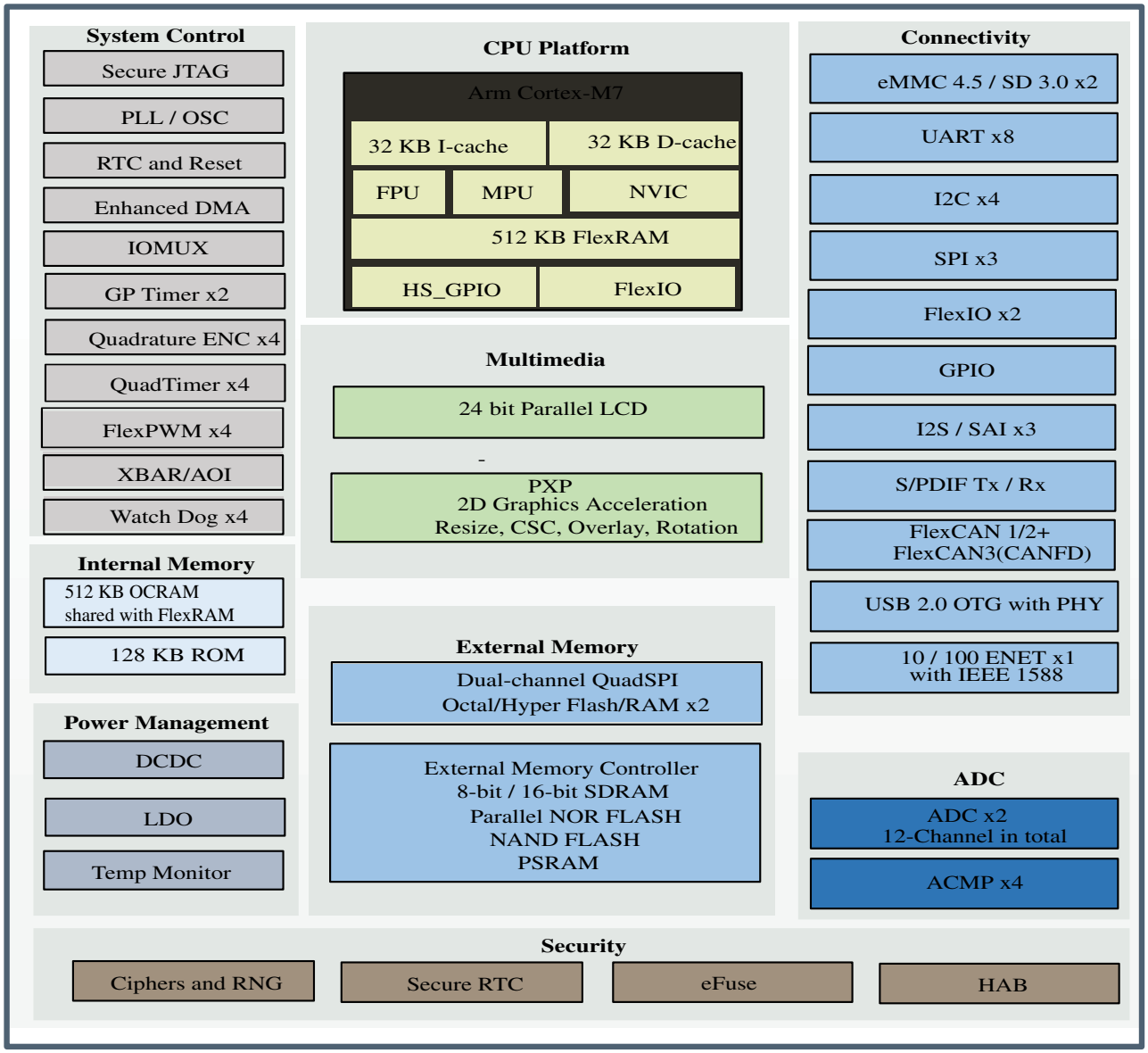

Figure 2. i.MX RT1040 system block diagram

All information provided in this document is subject to legal disclaimers.

© 2025 NXP B.V. All rights reserved.

Downloaded from Arrow.com.

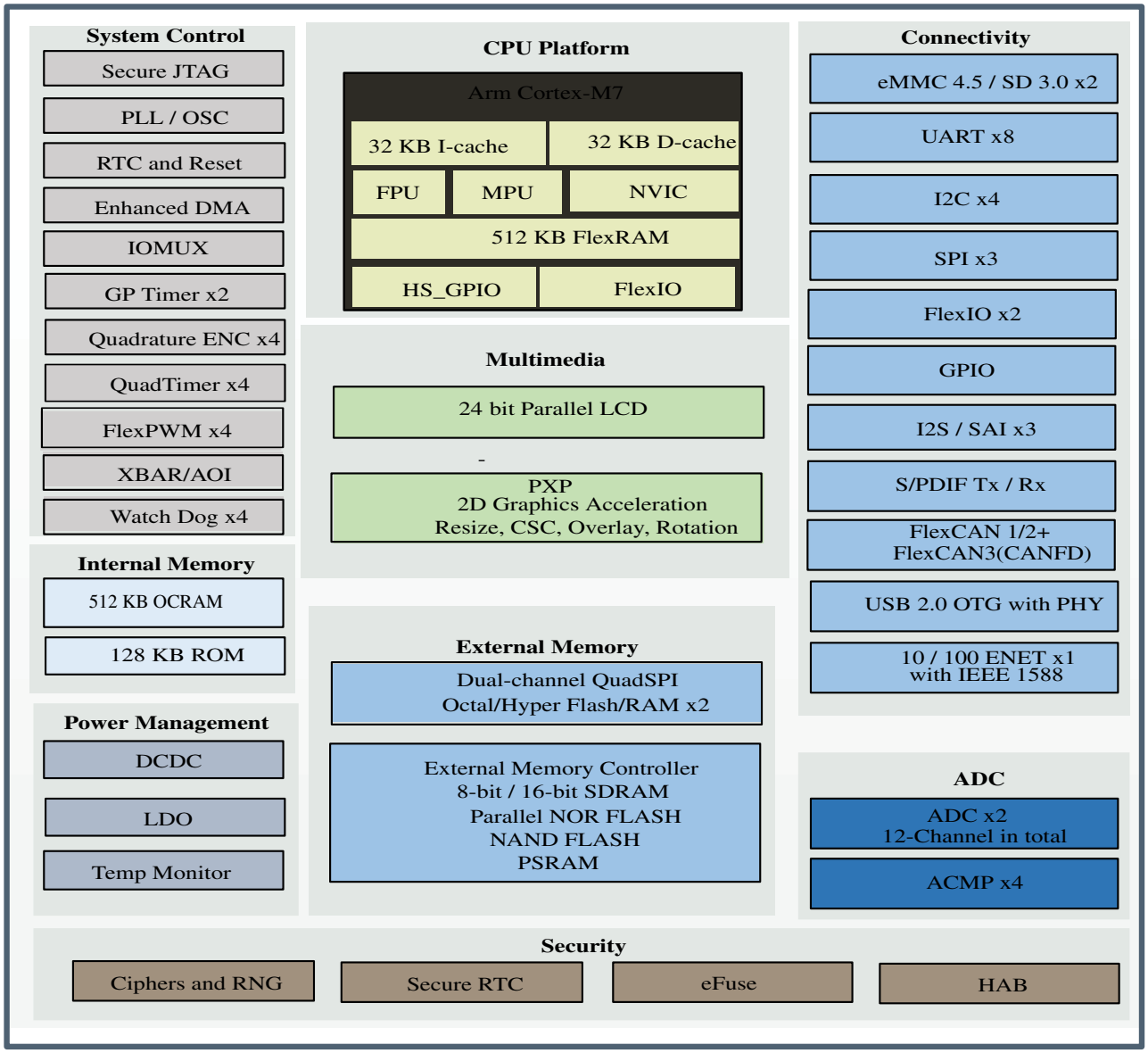

Figure 3. i.MXRT1043 system block diagram

All information provided in this document is subject to legal disclaimers.

© 2025 NXP B.V. All rights reserved.

Downloaded from Arrow.com.

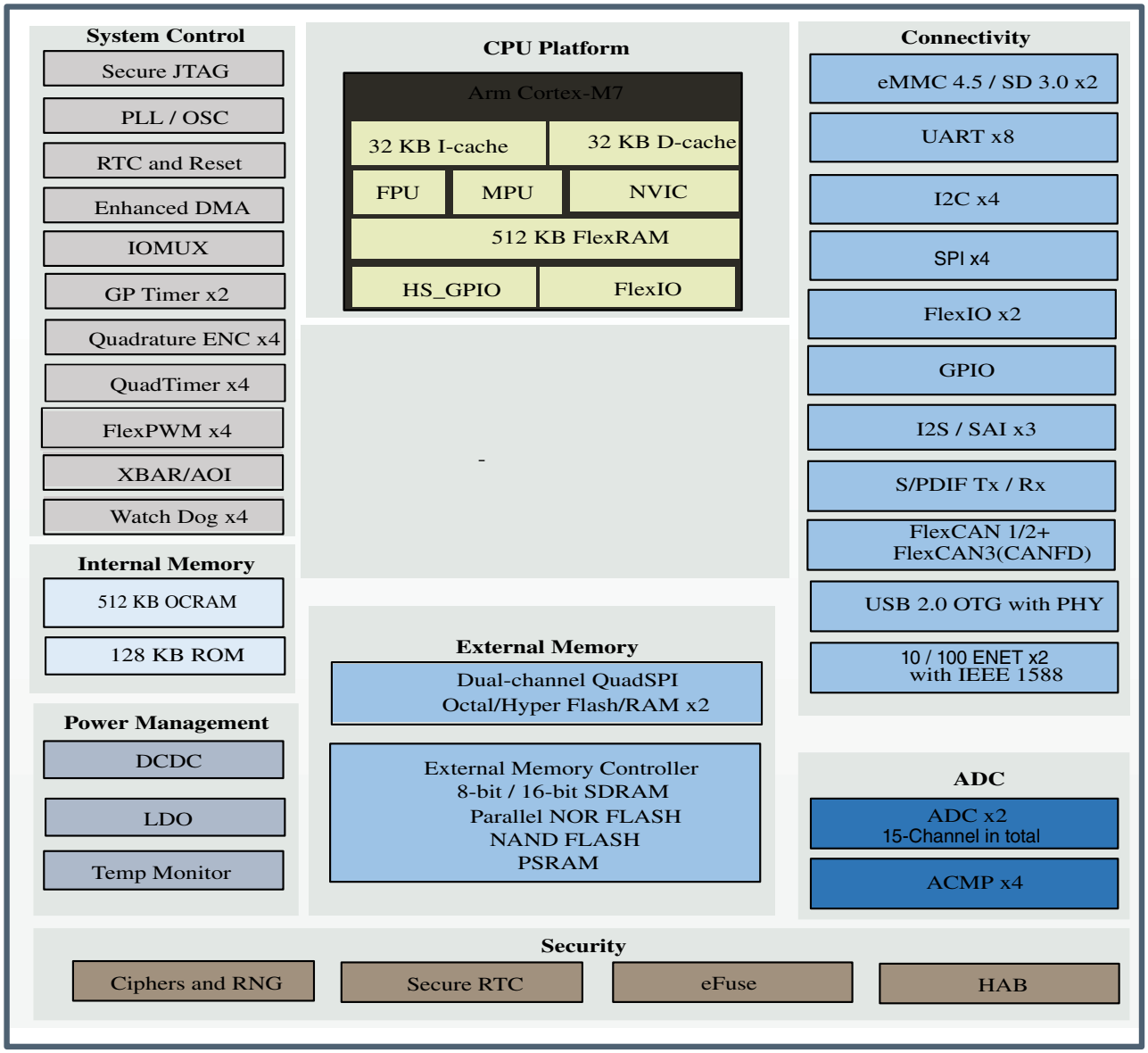

Figure 4. i.MXRT1046 system block diagram

3 Modules List

The i.MX RT1040 processors contain a variety of digital and analog modules. Table 2 describes these modules in alphabetical order.

All information provided in this document is subject to legal disclaimers.

© 2025 NXP B.V. All rights reserved.

Downloaded from Arrow.com.

Table 2. i.MX RT1040 modules list

Block Mnemonic	Block Name	Subsystem	Brief Description
ACMP1 ACMP2 ACMP3 ACMP4	Analog Comparator	Analog	The comparator (CMP) provides a circuit for comparing two analog input voltages. The comparator circuit is designed to operate across the full range of the supply voltage (rail-to-rail operation).
ADC1 ADC2	Analog to Digital Converter	Analog	The ADC is a 12-bit general purpose analog to digital converter.
AOI	And-Or-Inverter	Cross Trigger	The AOI provides a universal boolean function generator using a four team sum of products expression with each product term containing true or complement values of the four selected inputs (A, B, C, D).
Arm	Arm Platform	Arm	The Arm Core Platform includes one Cortex-M7 core. It includes associated sub-blocks, such as Nested Vectored Interrupt Controller (NVIC), Floating-Point Unit (FPU), Memory Protection Unit (MPU), and CoreSight debug modules.
BEE	Bus Encryption Engine	Security	On-The-Fly FlexSPI Flash Decryption
CCM GPC SRC	Clock Control Module, General Power Controller, System Reset Controller	Clocks, Resets, and Power Control	These modules are responsible for clock and reset distribution in the system, and also for the system power management.
CSU	Central Security Unit	Security	The Central Security Unit (CSU) is responsible for setting comprehensive security policy within the i.MX RT1040 platform.
DAP	Debug Access Port	System Control Peripherals	The DAP provides real-time access for the debugger without halting the core to: • System memory and peripheral registers • All debug configuration registers The DAP also provides debugger access to JTAG scan chains. The DAP module is internal to the Cortex-M7 Core Platform.
DCDC	DCDC Converter	Analog	The DCDC module is used for generating power supply for core logic. Main features are: • Adjustable high efficiency regulator • Supports 3.3 V input voltage • Supports nominal run and low power standby modes • Supports at 0.9 ~ 1.3 V output in run mode

Table continues on the next page...

All information provided in this document is subject to legal disclaimers.

© 2025 NXP B.V. All rights reserved.

Downloaded from Arrow.com.

Table 2. i.MX RT1040 modules list...*continued*

Block Mnemonic	Block Name	Subsystem	Brief Description
			• Supports at 0.9 ~ 1.0 V output in standby mode • Over current and over voltage detection
eDMA	enhanced Direct Memory Access	System Control Peripherals	There is an enhanced DMA (eDMA) engine and two DMA_MUX. • The eDMA is a 32 channel DMA engine, which is capable of performing complex data transfers with minimal intervention from a host processor. • The DMA_MUX is capable of multiplexing up to 128 DMA request sources to the 32 DMA channels of eDMA.
ENC	Quadrature Encoder/Decoder	Timer Peripherals	The enhanced quadrature encoder/decoder module provides interfacing capability to position/speed sensors. There are five input signals: PHASEA, PHASEB, INDEX, TRIGGER, and HOME. This module is used to decode shaft position, revolution count, and speed.
ENET	Ethernet Controller	Connectivity Peripherals	The Ethernet Media Access Controller (MAC) is designed to support 10/100 Mbit/s Ethernet/IEEE 802.3 networks. An external transceiver interface and transceiver function are required to complete the interface to the media. The module has dedicated hardware to support the IEEE 1588 standard. See the ENET chapter of the reference manual for details.
EWM	External Watchdog Monitor	Timer Peripherals	The EWM modules is designed to monitor external circuits, as well as the software flow. This provides a back-up mechanism to the internal WDOG that can reset the system. The EWM differs from the internal WDOG in that it does not reset the system. The EWM, if allowed to time-out, provides an independent trigger pin that when asserted resets or places an external circuit into a safe mode.
FLEXCAN1 FLEXCAN2	Flexible Controller Area Network	Connectivity Peripherals	The CAN protocol was primarily, but not only, designed to be used as a vehicle serial data bus, meeting the specific requirements of this field: real-time processing, reliable operation in the Electromagnetic interference (EMI) environment of a vehicle, cost-effectiveness and required bandwidth. The FlexCAN module is a full implementation of the CAN protocol specification, Version 2.0 B, which supports both standard and extended message frames.
FLEXCAN (FD)	Flexible Controller Area Network	Connectivity Peripherals	The CAN with Flexible Data-Rate protocol and the CAN 2.0 version B protocol supports both standard

Table continues on the next page...

All information provided in this document is subject to legal disclaimers.

© 2025 NXP B.V. All rights reserved.

Downloaded from Arrow.com.

Table 2. i.MX RT1040 modules list...*continued*

Block Mnemonic	Block Name	Subsystem	Brief Description
			and extended message frames, both of them have long payloads up to 64 bytes transferred at faster rates up to 8 Mbps.
FlexIO1 FlexIO2 FlexIO3	Flexible Input/output	Connectivity and Communications	The FlexIO is capable of supporting a wide range of protocols including, but not limited to: UART, I2C, SPI, I2S, display interface, PWM waveform generation, etc. The module can remain functional when the chip is in a low power mode provided the clock it is using remain active.
FlexPWM1 FlexPWM2 FlexPWM3 FlexPWM4	Pulse Width Modulation	Timer Peripherals	The pulse-width modulator (PWM) contains four PWM sub-modules, each of which is set up to control a single half-bridge power stage. Fault channel support is provided. The PWM module can generate various switching patterns, including highly sophisticated waveforms.
FlexRAM	RAM	Memories	The i.MX RT1040 has 512 KB of on-chip RAM which could be flexible allocated to I-TCM, D-TCM, and on-chip RAM (OCRAM) in a 32 KB granularity. The FlexRAM is the manager of the on-chip RAM array. Major functions of this blocks are: interfacing to I-TCM and D-TCM of Arm core and OCRAM controller; dynamic RAM arrays allocation for I-TCM, D-TCM, and OCRAM.
FlexSPI	Quad Serial Peripheral Interface	Connectivity and Communications	FlexSPI acts as an interface to one or two external serial flash devices, each with up to four bidirectional data lines.
GPIO1 GPIO2 GPIO3 GPIO4 GPIO5	General Purpose I/O Modules	System Control Peripherals	Used for general purpose input/output to external ICs. Each GPIO module supports up to 32 bits of I/O.
GPT1 GPT2	General Purpose Timer	Timer Peripherals	Each GPT is a 32-bit "free-running" or "set and forget" mode timer with programmable prescaler and compare and capture register. A timer counter value can be captured using an external event and can be configured to trigger a capture event on either the leading or trailing edges of an input pulse. When the timer is configured to operate in "set and forget" mode, it is capable of providing precise interrupts at regular intervals with minimal processor intervention. The counter has output compare logic to provide the status and interrupt at

Table continues on the next page...

All information provided in this document is subject to legal disclaimers.

© 2025 NXP B.V. All rights reserved.

Downloaded from Arrow.com.

Table 2. i.MX RT1040 modules list...*continued*

Block Mnemonic	Block Name	Subsystem	Brief Description
			comparison. This timer can be configured to run either on an external clock or on an internal clock.
LCDIF	LCD interface ***Note:*** *RT1046 doesn't support it.*	Multimedia Peripherals	The LCDIF is a general purpose display controller used to drive a wide range of display devices varying in size and capabilities. The LCDIF is designed to support dumb (synchronous 24-bit Parallel RGB interface) and smart (asynchronous parallel MPU interface) LCD devices.
LPI2C1 LPI2C2 LPI2C3 LPI2C4	Low Power Inter-integrated Circuit	Connectivity and Communications	The LPI2C is a low power Inter-Integrated Circuit (I2C) module that supports an efficient interface to an I2C bus as a master. The I2C provides a method of communication between a number of external devices. For detailed information, see LPI2C module timing parameters.
LPSPI1 LPSPI2 LPSPI3 ***Note:*** *RT1046 has LPSPI4*	Low Power Serial Peripheral Interface	Connectivity and Communications	The LPSPI is a low power Serial Peripheral Interface (SPI) module that support an efficient interface to an SPI bus as a master and/or a slave. • It can continue operating while the chip is in stop modes, if an appropriate clock is available • Designed for low CPU overhead, with DMA off loading of FIFO register access
LPUART1 LPUART2 LPUART3 LPUART4 LPUART5 LPUART6 LPUART7 LPUART8	UART Interface	Connectivity Peripherals	Each of the UART modules support the following serial data transmit/receive protocols and configurations: • 7- or 8-bit data words, 1 or 2 stop bits, programmable parity (even, odd or none) • Programmable baud rates up to 20 Mbps.
MQS	Medium Quality Sound	Multimedia Peripherals	MQS is used to generate 2-channel medium quality PWM-like audio via two standard digital GPIO pins.
PXP	Pixel Processing Pipeline ***Note:*** *RT1046 doesn't support PXP*	Multimedia Peripherals	A high-performance pixel processor capable of 1 pixel/clock performance for combined operations, such as color-space conversion, alpha blending, and rotation. The PXP is enhanced with features specifically for gray scale applications. In addition, the PXP supports traditional pixel/frame

Table continues on the next page...

All information provided in this document is subject to legal disclaimers.

© 2025 NXP B.V. All rights reserved.

Downloaded from Arrow.com.

Table 2. i.MX RT1040 modules list...*continued*

Block Mnemonic	Block Name	Subsystem	Brief Description
			processing paths for still-image and video processing applications.
QuadTimer1 QuadTimer2 QuadTimer3 QuadTimer4	QuadTimer	Timer Peripherals	The quad-timer provides four time channels with a variety of controls affecting both individual and multi-channel features. Specific features include up/down count, cascading of counters, programmable module, count once/repeated, counter preload, compare registers with preload, shared use of input signals, prescaler controls, independent capture/compare, fault input control, programmable input filters, and multi-channel synchronization.
ROMCP	ROM Controller with Patch	Memories and Memory Controllers	The ROMCP acts as an interface between the Arm advanced high-performance bus and the ROM. The on-chip ROM is only used by the Cortex-M7 core during boot up. Size of the ROM is 96 KB.
RTC OSC	Real Time Clock Oscillator	Clock Sources and Control	The RTC OSC provides the clock source for the Real-Time Clock module. The RTC OSC module, in conjunction with an external crystal, generates a 32.768 kHz reference clock for the RTC.
RTWDOG	Watch Dog	Timer Peripherals	The RTWDG module is a high reliability independent timer that is available for system to use. It provides a safety feature to ensure software is executing as planned and the CPU is not stuck in an infinite loop or executing unintended code. If the WDOG module is not serviced (refreshed) within a certain period, it resets the MCU. Windowed refresh mode is supported as well.
SAI1 SAI2 SAI3	Synchronous Audio Interface	Multimedia Peripherals	The SAI module provides a synchronous audio interface (SAI) that supports full duplex serial interfaces with frame synchronization, such as I2S, AC97, TDM, and codec/DSP interfaces.
SA-TRNG	Standalone True Random Number Generator	Security	The SA-TRNG is hardware accelerator that generates a 512-bit entropy as needed by an entropy consuming module or by other post processing functions.
SEMC	Smart External Memory Controller	Memory and Memory Controller	The SEMC is a multi-standard memory controller optimized for both high-performance and low pin-count. It can support multiple external memories in the same application with shared address and data pins. The interface supported includes SDRAM, NOR Flash, SRAM, and NAND Flash, as well as 8080 display interface.

Table continues on the next page...

All information provided in this document is subject to legal disclaimers.

© 2025 NXP B.V. All rights reserved.

Downloaded from Arrow.com.

Table 2. i.MX RT1040 modules list...*continued*

Block Mnemonic	Block Name	Subsystem	Brief Description
SJC	System JTAG Controller	System Control Peripherals	The SJC provides JTAG interface, which complies with JTAG TAP standards, to internal logic. The i.MX RT1040 processors use JTAG port for production, testing, and system debugging. In addition, the SJC provides BSR (Boundary Scan Register) standard support, which complies with IEEE 1149.1 and IEEE 1149.6 standards. The JTAG port is accessible during platform initial laboratory bring-up, for manufacturing tests and troubleshooting, as well as for software debugging by authorized entities. The i.MX RT1040 SJC incorporates three security modes for protecting against unauthorized accesses. Modes are selected through eFUSE configuration.
SNVS	Secure Non-Volatile Storage	Security	Secure Non-Volatile Storage, including Secure Real Time Clock, Security State Machine, Master Key Control, Violation, and reporting.
SPDIF	Sony Philips Digital Interconnect Format	Multimedia Peripherals	A standard audio file transfer format, developed jointly by the Sony and Phillips corporations. Has Transmitter and Receiver functionality.
Temp Monitor	Temperature Monitor	Analog	The temperature sensor implements a temperature sensor/conversion function based on a temperature-dependent voltage to time conversion.
USBO2	Universal Serial Bus 2.0	Connectivity Peripherals	USBO2 (USB OTG1) contains: • One high-speed OTG 2.0 modules with integrated HS USB PHYs • Support eight Transmit (TX) and eight Receive (Rx) endpoints, including endpoint 0
uSDHC1 uSDHC2	SD/MMC and SDXC Enhanced Multi-Media Card / Secure Digital Host Controller	Connectivity Peripherals	i.MX RT1040 specific SoC characteristics: All four MMC/SD/SDIO controller IPs are identical and are based on the uSDHC IP. They are: • Fully compliant with MMC command/response sets and Physical Layer as defined in the Multimedia Card System Specification, v4.5/4.2/4.3/4.4/4.41/ including high-capacity (size > 2 GB) cards HC MMC. • Fully compliant with SD command/response sets and Physical Layer as defined in the SD Memory Card Specifications, v3.0 including high-capacity SDXC cards up to 2 TB.

Table continues on the next page...

All information provided in this document is subject to legal disclaimers.

© 2025 NXP B.V. All rights reserved.

Downloaded from Arrow.com.

Table 2. i.MX RT1040 modules list...*continued*

Block Mnemonic	Block Name	Subsystem	Brief Description
			• Fully compliant with SDIO command/response sets and interrupt/read-wait mode as defined in the SDIO Card Specification, Part E1, v3.0 Two ports support: • 1-bit or 4-bit transfer mode specifications for SD and SDIO cards up to UHS-I SDR104 mode (104 MB/s max) • 1-bit, 4-bit, or 8-bit transfer mode specifications for MMC cards up to 52 MHz in both SDR and DDR modes (104 MB/s max) • 4-bit or 8-bit transfer mode specifications for eMMC chips up to 200 MHz in HS200 mode (200 MB/s max)
WDOG1 WDOG2	Watch Dog	Timer Peripherals	The watchdog (WDOG) Timer supports two comparison points during each counting period. Each of the comparison points is configurable to evoke an interrupt to the Arm core, and a second point evokes an external event on the WDOG line.
XBAR	Cross BAR	Cross Trigger	Each crossbar switch is an array of muxes with shared inputs. Each mux output provides one output of the crossbar. The number of inputs and the number of muxes/outputs are user configurable and registers are provided to select which of the shared inputs are routed to each output.

3.1 Special signal considerations

Table 3 lists special signal considerations for the i.MX RT1040 processors. The signal names are listed in alphabetical order.

The package contact assignments can be found in Package information and contact assignments. Signal descriptions are provided in the *i.MX RT1040 Reference Manual* (IMXRT1040RM).

Table 3. Special signal considerations

Signal Name	Remarks
DCDC_PSWITCH	PAD is in DCDC_IN domain and connected the ground to bypass DCDC. To enable DCDC function, assert to DCDC_PSWITCH with at least 1ms delay for DCDC_IN rising edge.
RTC_XTALI/RTC_XTALO	If the user wishes to configure RTC_XTALI and RTC_XTALO as an RTC oscillator, a 32.768 kHz crystal, (≤100 kΩ ESR, 10 pF load) should be connected between RTC_XTALI and RTC_XTALO. Keep in mind the capacitors implemented on either side of the crystal are about twice the crystal load capacitor. To hit the exact oscillation frequency, the board capacitors need to be reduced to account for board and chip parasitics. The integrated oscillation amplifier is self biasing, but relatively weak. Care must be taken to limit parasitic leakage from RTC_XTALI and RTC_XTALO to

Table continues on the next page...

All information provided in this document is subject to legal disclaimers.

© 2025 NXP B.V. All rights reserved.

Downloaded from Arrow.com.

Table 3. Special signal considerations *...continued*

Signal Name	Remarks
	either power or ground (>100 MΩ). This will debias the amplifier and cause a reduction of start-up margin. Typically RTC_XTALI and RTC_XTALO should bias to approximately 0.5 V. If it is desired to feed an external low frequency clock into RTC_XTALI the RTC_XTALO pin must remain unconnected or driven with a complimentary signal. The logic level of this forcing clock should not exceed VDD_SNVS_CAP level and the frequency should be <100 kHz under typical conditions. In case when high accuracy real time clock are not required system may use internal low frequency ring oscillator. It is recommended to connect RTC_XTALI to GND and keep RTC_XTALO unconnected.
XTALI/XTALO	A 24.0 MHz crystal should be connected between XTALI and XTALO. The crystal must be rated for a maximum drive level of 250 µW. An ESR (equivalent series resistance) of typical 80 Ω is recommended. NXP SDK software requires 24 MHz on XTALI/XTALO. The crystal can be eliminated if an external 24 MHz oscillator is available in the system. In this case, XTALO must be directly driven by the external oscillator and XTALI mounted with 18 pF capacitor. The logic level of this forcing clock cannot exceed NVCC_PLL level. If this clock is used as a reference for USB, then there are strict frequency tolerance and jitter requirements. See OSC24M chapter and relevant interface specifications chapters for details.
GPANAIO	This signal is reserved for NXP manufacturing use only. This output must remain unconnected.
JTAG_*nnnn*	The JTAG interface is summarized in Table 4. Use of external resistors is unnecessary. However, if external resistors are used, the user must ensure that the on-chip pull-up/down configuration is followed. For example, do not use an external pull down on an input that has on-chip pull-up.
	JTAG_TDO is configured with a keeper circuit such that the non-connected condition is eliminated if an external pull resistor is not present. An external pull resistor on JTAG_TDO is detrimental and should be avoided.
	JTAG_MOD is referenced as SJC_MOD in the i.MX RT1040 reference manual (IMXRT1040RM). Both names refer to the same signal. JTAG_MOD must be externally connected to GND for normal operation. Termination to GND through an external pull-down resistor (such as 1 kΩ) is allowed. JTAG_MOD set to hi configures the JTAG interface to mode compliant with IEEE1149.1 standard. JTAG_MOD set to low configures the JTAG interface for common SW debug adding all the system TAPs to the chain.
NC	These signals are No Connect (NC) and should be disconnected by the user.
POR_B	This cold reset negative logic input resets all modules and logic in the IC. May be used in addition to internally generated power on reset signal (logical AND, both internal and external signals are considered active low).
ONOFF	ONOFF can be configured in debounce, off to on time, and max time-out configurations. The debounce and off to on time configurations supports 0, 50, 100 and 500 ms. Debounce is used to generate the power off interrupt. While in the ON state, if ONOFF button is pressed longer than the debounce time, the power off interrupt is generated. Off to on time supports the time it takes to

Table continues on the next page...

All information provided in this document is subject to legal disclaimers.

© 2025 NXP B.V. All rights reserved.

Downloaded from Arrow.com.

Table 3. Special signal considerations *...continued*

Signal Name	Remarks
	request power on after a configured button press time has been reached. While in the OFF state, if ONOFF button is pressed longer than the off to on time, the state will transition from OFF to ON. Max time-out configuration supports 5, 10, 15 seconds and disable. Max time-out configuration supports the time it takes to request power down after ONOFF button has been pressed for the defined time.
TEST_MODE	TEST_MODE is for NXP factory use. The user can leave this signal floating or tie it to ground.
WAKEUP	A GPIO powered by SNVS domain power supply which can be configured as wakeup source in SNVS mode.

Table 4. JTAG Controller interface summary

JTAG	I/O Type	On-chip Termination
JTAG_TCK	Input	100 kΩ pull-down
JTAG_TMS	Input	47 kΩ pull-up
JTAG_TDI	Input	47 kΩ pull-up
JTAG_TDO	3-state output	Keeper
JTAG_TRSTB	Input	47 kΩ pull-up
JTAG_MOD	Input	100 kΩ pull-down

3.2 Recommended connections for unused analog interfaces

Table 5 shows the recommended connections for unused analog interfaces.

Table 5. Recommended connections for unused analog interfaces

Module	Pad Name	Recommendations if Unused
USB	USB_OTG1_CHD_B, USB_OTG1_DN, USB_OTG1_DP, USB_OTG1_VBUS,	Not connected
ADC	VDDA_ADC_3P3	VDDA_ADC_3P3 must be powered even if the ADC is not used.

4 Electrical Characteristics

This section provides the device and module-level electrical characteristics for the i.MX RT1040 processors.

All information provided in this document is subject to legal disclaimers.

© 2025 NXP B.V. All rights reserved.

Downloaded from Arrow.com.

4.1 Chip-Level conditions

This section provides the device-level electrical characteristics for the IC. See Table 6 for a quick reference to the individual tables and sections.

Table 6. i.MX RT1040 chip-Level conditions

For these characteristics, refer to
Absolute maximum ratings
Thermal resistance
Operating ranges
External clock sources
Maximum supply currents
Low power mode supply currents
USB PHY current consumption

4.1.1 Absolute maximum ratings

Note: *Stress beyond those listed under* Table 7 *may cause permanent damage to the device. These are stress ratings only. Functional operation of the device at these or any other conditions beyond those indicated under "recommended operating conditions" is not implied. Exposure to absolute-maximum-rated conditions for extended periods may affect device reliability.*

Table 7 shows the absolute maximum operating ratings.

Table 7. Absolute maximum ratings

Parameter Description	Symbol	Min	Max	Unit
Core supplies input voltage	VDD_SOC_IN	-0.3	1.6	V
VDD_HIGH_IN supply voltage	VDD_HIGH_IN	-0.3	3.7	V
Power for DCDC	DCDC_IN	-0.3	3.6	V
Supply input voltage to Secure Non-Volatile Storage and Real Time Clock	VDD_SNVS_IN	-0.3	3.6	V
USB VBUS supply	USB_OTG1_VBUS	—	5.5	V
Supply for 12-bit ADC	VDDA_ADC	-0.3	3.6	V
IO supply for GPIO in SDIO1 bank (3.3 V mode)	NVCC_SD0	-0.3	3.6	V
IO supply for GPIO in SDIO1 bank (1.8 V mode)		-0.3	1.95	V
IO supply for GPIO in SDIO2 bank (3.3 V mode)	NVCC_SD1	-0.3	3.6	V
IO supply for GPIO in SDIO2 bank (1.8 V mode)		-0.3	1.95	V

Table continues on the next page...

All information provided in this document is subject to legal disclaimers.

© 2025 NXP B.V. All rights reserved.

Downloaded from Arrow.com.

Table 7. Absolute maximum ratings *...continued*

Parameter Description	Symbol	Min	Max	Unit
IO supply for GPIO in EMC bank (3.3 V mode)	NVCC_EMC	-0.3	3.6	V
IO supply for GPIO in EMC bank (1.8 V mode)		-0.3	1.95	V
ESD damage Immunity: Human Body Model (HBM) Charge Device Model (CDM)	Vesd	— —	1000 500	V
Input/Output Voltage range	V_{in}/V_{out}	-0.5	OVDD + 0.3[1]	V
Storage Temperature range	$T_{STORAGE}$	-40	150	° C

[1] OVDD is the I/O supply voltage.

4.1.2 Thermal resistance

4.1.2.1 7 x 7 MM thermal resistance

Table 8 shows the 7 x 7 MM package thermal resistance data.

Table 8. 7 x 7 MM thermal resistance data

Rating	Board type[1]	Symbol	Value	Unit
Junction to Ambient Thermal resistance[2]	JESD51-9, 2s2p	$R_{\theta JA}$	38.2	ºC/W
Junction-to-Top of Package Thermal Characterization Parameter[2][2]	JESD51-9, 2s2p	Ψ_{JT}	0.7	ºC/W
Junction to Case Thermal Resistance[3]	N/A	$R_{\theta JC}$	17.9	ºC/W

[1] Thermal test board meets JEDEC specification for this package (JESD51-9).
[2] Determined in accordance to JEDEC JESD51-2A natural convection environment. Thermal resistance data in this report is solely for a thermal performance comparison of one package to another in a standardized specified environment. It is not meant to predict the performance of a package in an application-specific environment.
[3] Junction-to-Case thermal resistance determined using an isothermal topside heat extraction. Case temperature is the package topside temperature.

4.1.2.2 9 x 9 MM thermal resistance

Table 9 shows the 9 x 9 MM package thermal resistance data.

Table 9. 9 x 9 MM thermal resistance data

Rating	Board type[1]	Symbol	Value	Unit
Junction to Ambient Thermal resistance[2]	JESD51-9, 2s2p	$R_{\theta JA}$	33.5	ºC/W
Junction-to-Top of Package Thermal Characterization Package[2]	JESD51-9, 2s2p	Ψ_{JT}	0.9	ºC/W
Junction to Case Thermal Resistance[3]	JESD51-9, 1s	$R_{\theta JC}$	14.2	ºC/W

[1] Thermal test board meets JEDEC specification for this package (JESD51-9).

All information provided in this document is subject to legal disclaimers.

© 2025 NXP B.V. All rights reserved.

Downloaded from Arrow.com.

[2] Determined in accordance to JEDEC JESD51-2A natural convection environment. Thermal resistance data in this report is solely for a thermal performance comparison of one package to another in a standardized specified environment. It is not meant to predict the performance of a package in an application-specific environment.
[3] Junction-to-Case thermal resistance determined using an isothermal topside heat extraction. Case temperature is the package topside temperature

4.1.2.3 11 x 11 MM thermal resistance

Table 10 shows the 11 x 11 MM package thermal resistance data.

Table 10. 11 x 11 MM thermal resistance data

Rating	Board type[1]	Symbol	Value	Unit
Junction to Ambient Thermal resistance [2]	JESD51-9, 2s2p	$R_{\theta JA}$	32.9	ºC/W
Junction-to-Top of package Thermal Characterization Package[2]	JESD51-9, 2s2p	Ψ_{JT}	1.0	ºC/W
Junction to Case Thermal Resistance[3]	JESD51-9, 1s	$R_{\theta JC}$	14.2	ºC/W

[1] Thermal test board meets JEDEC specification for this package (JESD51-9).
[2] Determined in accordance to JEDEC JESD51-2A natural convection environment. Thermal resistance data in this report is solely for a thermal performance comparison of one package to another in a standardized specified environment. It is not meant to predict the performance of a package in an application-specific environment.
[3] Junction-to-Case thermal resistance determined using an isothermal topside heat extraction. Case temperature is the package topside temperature.

4.1.3 Operating ranges

Table 11 provides the operating ranges of the i.MX RT1040 processors. For details on the chip's power structure, see the "Power Management Unit (PMU)" chapter of the *i.MX RT1040 Reference Manual* (IMXRT1040RM).

Table 11. Operating ranges

Parameter Description	Symbol	Operating Conditions	Min	Typ	Max[1]	Unit	Comment
Run Mode	VDD_SOC_IN	Overdrive	1.25	—	1.26	V	—
	VDD_SOC_IN	M7 core at 528 MHz	1.15	—	1.26	V	—
		M7 core at 132 MHz	1.15	—	1.26		
		M7 core at 24 MHz	0.925	—	1.26		
IDLE Mode	VDD_SOC_IN	M7 core operation at 528 MHz or below	1.15	—	1.26	V	—
SUSPEND (DSM) Mode	VDD_SOC_IN	—	0.925	—	1.26	V	Refer to Table 14 current and power consumption
SNVS Mode	VDD_SOC_IN	—	0	—	1.26	V	—

Table continues on the next page...

All information provided in this document is subject to legal disclaimers.

© 2025 NXP B.V. All rights reserved.

Downloaded from Arrow.com.

Table 11. Operating ranges...*continued*

Parameter Description	Symbol	Operating Conditions	Min	Typ	Max[1]	Unit	Comment
Power for DCDC	DCDC_IN	—	3.0	—	3.6	V	—
VDD_HIGH internal Regulator	VDD_HIGH_IN[2]	—	3.0	—	3.6	V	Must match the range of voltages that the rechargeable backup battery supports.
Backup battery supply range	VDD_SNVS_IN	—	2.40	—	3.6	V	Can be combined with VDD_HIGH_IN, if the system does not require keeping real time and other data on OFF state.
USB supply voltages	USB_OTG1_VBUS	—	4.40	—	5.5	V	—
GPIO supplies	NVCC_GPIO	—	3.0	3.3	3.6	V	All digital I/O supplies (NVCC_xxxx) must be powered (unless otherwise specified in this data sheet) under normal conditions whether the associated I/O pins are in use or not.
	NVCC_SD0	—	1.65	1.8	1.95	V	
			3.0	3.3	3.6	V	
	NVCC_SD1	—	1.65	1.8	1.95	V	
			3.0	3.3	3.6	V	
	NVCC_EMC	—	1.65	1.8	1.95	V	
			3.0	3.3	3.6	V	
A/D converter	VDDA_ADC_3P3	—	3.0	3.3	3.6	V	VDDA_ADC_3P3 must be powered even if the ADC is not used. VDDA_ADC_3P3 cannot be powered when the other SoC supplies (except VDD_SNVS_IN) are off.
System frequency /Bus frequency	F_{SYS}/F_{BUS}	—	24/ 24	528/ 132	600/ 150	MHz	—
Temperature Operating Ranges							
Junction temperature	Tj	Standard Commercial	0	—	95	°C	See the application note, i.MX RT1040 Product Lifetime Usage Estimates for information on product lifetime (power-on years) for this processor.

[1] Applying the maximum voltage results in maximum power consumption and heat generation. NXP recommends a voltage set point = (V_{min} + the supply tolerance). This result in an optimized power/speed ratio.

[2] Applying the maximum voltage results in shorten lifetime. 3.6 V usage limited to < 1% of the use profile. Reset of profile limited to below 3.49 V.

All information provided in this document is subject to legal disclaimers.

© 2025 NXP B.V. All rights reserved.

Downloaded from Arrow.com.

4.1.4 External clock sources

Each i.MX RT1040 processor has two external input system clocks: a low frequency (RTC_XTALI) and a high frequency (XTALI).

The RTC_XTALI is used for low-frequency functions. It supplies the clock for wake-up circuit, power-down real time clock operation, and slow system and watch-dog counters. The clock input can be connected to either external oscillator or a crystal using internal oscillator amplifier. Additionally, there is an internal ring oscillator, which can be used instead of the RTC_XTALI if accuracy is not important.

The system clock input XTALI is used to generate the main system clock. It supplies the PLLs and other peripherals. The system clock input can be connected to either external oscillator or a crystal using internal oscillator amplifier.

Table 12 shows the interface frequency requirements.

Table 12. External input clock frequency

Parameter Description	Symbol	Min	Typ	Max	Unit
RTC_XTALI Oscillator[1],[2]	f_{ckil}	—	32.768[3]/32.0	—	kHz
XTALI Oscillator[2],[4]	f_{xtal}	—	24	—	MHz

[1] External oscillator or a crystal with internal oscillator amplifier.
[2] The required frequency stability of this clock source is application dependent.
[3] Recommended nominal frequency 32.768 kHz.
[4] External oscillator or a fundamental frequency crystal with internal oscillator amplifier.

The typical values shown in Table 12 are required for use with NXP SDK to ensure precise time keeping and USB operation. For RTC_XTALI operation, two clock sources are available.

- On-chip 40 kHz ring oscillator—this clock source has the following characteristics:
  - Approximately 25 µA more Idd than crystal oscillator
  - Approximately ±50% tolerance
  - No external component required
  - Starts up quicker than 32 kHz crystal oscillator
- External crystal oscillator with on-chip support circuit:
  - At power up, ring oscillator is utilized. After crystal oscillator is stable, the clock circuit switches over to the crystal oscillator automatically.
  - Higher accuracy than ring oscillator
  - If no external crystal is present, then the ring oscillator is utilized

The decision of choosing a clock source should be taken based on real-time clock use and precision time-out.

4.1.5 Maximum supply currents

The data shown in Table 13 represent a use case designed specifically to show the maximum current consumption possible. All cores are running at the defined maximum frequency and are limited to L1 cache accesses only to ensure no pipeline stalls. Although a valid condition, it would have a very limited practical use case, if at all, and be limited to an extremely low duty cycle unless the intention were to specifically show the worst case power consumption.

See the *i.MX RT1040 Power Consumption Measurement Application Note* for more details on typical power consumption under various use case definitions.

All information provided in this document is subject to legal disclaimers.

© 2025 NXP B.V. All rights reserved.

Downloaded from Arrow.com.

Table 13. Maximum supply currents

Power Rail	Conditions	Max Current	Unit
DCDC_IN	Max power for chip at 95 °C with core mark run on FlexRAM	110	mA
VDD_HIGH_IN	Include internal loading in analog	50	mA
VDD_SNVS_IN	—	250	µA
USB_OTG1_VBUS	25 mA for active USB interface	50	mA
VDDA_ADC_3P3	3.3 V power supply for 12-bit ADC, 600 µA typical, 750 µA max, for each ADC. 100 Ohm max loading for touch panel, cause 33 mA current.	40	mA
NVCC_GPIO NVCC_SD0 NVCC_SD1 NVCC_EMC	Imax = N x C x V x (0.5 x F) Where: N—Number of IO pins supplied by the power line C—Equivalent external capacitive load V—IO voltage (0.5 x F)—Data change rate. Up to 0.5 of the clock rate (F) In this equation, Imax is in Amps, C in Farads, V in Volts, and F in Hertz.		

4.1.6 Low power mode supply currents

Table 14 shows the current core consumption (not including I/O) of i.MX RT1040 processors in selected low power modes.

Table 14. Low power mode current and power consumption

Mode	Test Conditions	Supply	Typical[1]	Units
SYSTEM IDLE	• LDO_2P5 set to 2.5 V, LDO_1P1 set to 1.1 V • CPU in WFI, CPU clock gated • 24 MHz XTAL is ON • System PLL is active, other PLLs are power down • Peripheral clock gated, but remain powered • 512 KB RAM retention	DCDC_IN (3.3 V)	4.04	mA
		VDD_HIGH_IN (3.3 V)	7.66	
		VDD_SNVS_IN (3.3 V)	0.032	
		Total	38.72	mW
LOW POWER IDLE	• LDO_2P5 and LDO_1P1 are set to Weak mode • WFI, half FlexRAM power down in power gate mode • All PLLs are power down • 24 MHz XTAL is off, 24 MHz RCOSC used as clock source	DCDC_IN (3.3 V)	1.11	mA
		VDD_HIGH_IN (3.3 V)	0.309	
		VDD_SNVS_IN (3.3 V)	0.048	
		Total	4.84	mW

Table continues on the next page...

All information provided in this document is subject to legal disclaimers.

© 2025 NXP B.V. All rights reserved.

Downloaded from Arrow.com.

Table 14. Low power mode current and power consumption *...continued*

Mode	Test Conditions	Supply	Typical[1]	Units
	• Peripheral clock gated, but remain powered • 512 KB RAM retention			
SUSPEND (DSM)	• LDO_2P5 and LDO_1P1 are shut off • CPU in Power Gate mode • All PLLs are power down • 24 MHz XTAL is off, 24 MHz RCOSC is off • All clocks are shut off, except 32 kHz RTC • Peripheral clock gated, but remain powered • 64 KB RAM retention	DCDC_IN (3.3 V)	0.19	mA
		VDD_HIGH_IN (3.3 V)	0.029	
		VDD_SNVS_IN (3.3 V)	0.020	
		Total	0.789	mW
SNVS (RTC)	• All SOC digital logic, analog module are shut off • 32 kHz RTC is alive	DCDC_IN (0 V)	0	mA
		VDD_HIGH_IN (0 V)	0	
		VDD_SNVS_IN (3.3 V)	0.02	
		Total	0.066	mW

[1] The typical values shown here are for information only and are not guaranteed. These values are average values measured on a typical process wafer at 25ºC.

4.1.7 USB PHY current consumption

4.1.7.1 Power down mode

In power down mode, everything is powered down, including the USB VBUS valid detectors in typical condition. Table 15 shows the USB interface current consumption in power down mode.

Table 15. USB PHY current consumption in power down mode

	VDD_USB_CAP (3.0 V)	VDD_HIGH_CAP (2.5 V)	NVCC_PLL (1.1 V)
Current	5.1 µA	1.7 µA	< 0.5 µA

Note: *The currents on the VDD_HIGH_CAP and VDD_USB_CAP were identified to be the voltage divider circuits in the USB-specific level shifters.*

4.2 System power and clocks

This section provide the information about the system power and clocks.

4.2.1 Power supplies requirements and restrictions

The system design must comply with power-up sequence, power-down sequence, and steady state guidelines as described in this section to guarantee the reliable operation of the device. Any deviation from these sequences may result in the following situations:

- Excessive current during power-up phase
- Prevention of the device from booting
- Irreversible damage to the processor (worst-case scenario)

All information provided in this document is subject to legal disclaimers.

© 2025 NXP B.V. All rights reserved.

Downloaded from Arrow.com.

4.2.1.1 Power-up sequence

The below restrictions must be followed for both RT1040 and RT1046:

- VDD_SNVS_IN supply must be turned on before any other power supply or be connected (shorted) with VDD_HIGH_IN supply.
- If a coin cell is used to power VDD_SNVS_IN, then ensure that it is connected before any other supply is switched on.
- An RC delay circuit is recommended for providing the delay between DCDC_IN stable and DCDC_PSWITCH. The total RC delay should be 5-15 ms.
- DCDC_IN must reach a minimum 3.0 V within 0.3 x RC.
- Delay from DCDC_IN stable at 3.0 V min to DCDC_PSWITCH reaching 0.5 x DCDC_IN (1.5 V) must be at least 1 ms.
- Power up slew rate specification for other power domains is 360V/s – 36kV/s.

Note:

The POR_B input (if used) must be immediately asserted at power-up and remain asserted until after the last power rail reaches its working voltage. In the absence of an external reset feeding the POR_B input, the internal POR module takes control. See the i.MX RT1040 Reference Manual (IMXRT1040RM) for further details and to ensure that all necessary requirements are being met.

Note:

Need to ensure that there is no back voltage (leakage) from any supply on the board towards the 3.3 V supply (for example, from the external components that use both the 1.8 V and 3.3 V supplies).

Note:

USB_OTG1_VBUS and VDDA_ADC_3P3 are not part of the power supply sequence and may be powered at any time.

4.2.1.2 Power-down sequence

The following restrictions must be followed:

- VDD_SNVS_IN supply must be turned off after any other power supply or be connected (shorted) with VDD_HIGH_IN supply.
- If a coin cell is used to power VDD_SNVS_IN, then ensure that it is removed after any other supply is switched off.

4.2.1.3 Power supplies usage

All I/O pins should not be externally driven while the I/O power supply for the pin (NVCC_xxx) is OFF. This can cause internal latch-up and malfunctions due to reverse current flows. For information about I/O power supply of each pin, see "Power Rail" columns in pin list tables of Package information and contact assignments.

4.2.2 Integrated LDO voltage regulator parameters

Various internal supplies can be powered ON from internal LDO voltage regulators. All the supply pins named *_CAP must be connected to external capacitors. The on-board LDOs are intended for internal use only and should not be used to power any external circuitry. See the *i.MX RT1040 Reference Manual* (IMXRT1040RM) for details on the power tree scheme.

Note:

*The *_CAP signals should not be powered externally. These signals are intended for internal LDO operation only.*

4.2.2.1 Digital regulators (LDO_SNVS)

There are one digital LDO regulator ("Digital", because of the logic loads that they drive, not because of their construction). The advantages of the regulator is to reduce the input supply variation because of its input supply ripple rejection and its on-die trimming. This translates into more stable voltage for the on-chip logics.

The regulator has two basic modes:

All information provided in this document is subject to legal disclaimers.

© 2025 NXP B.V. All rights reserved.

Downloaded from Arrow.com.

- Power Gate. The regulation FET is switched fully off limiting the current draw from the supply. The analog part of the regulator is powered down here limiting the power consumption.
- Analog regulation mode. The regulation FET is controlled such that the output voltage of the regulator equals the target voltage.

For additional information, see the *i.MX RT1040 Reference Manual* (IMXRT1040RM).

4.2.2.2 Regulators for analog modules

4.2.2.2.1 LDO_1P1

The LDO_1P1 regulator implements a programmable linear-regulator function from VDD_HIGH_IN (see Table 11 for minimum and maximum input requirements). Typical Programming Operating Range is 1.0 V to 1.2 V with the nominal default setting as 1.1 V. The LDO_1P1 supplies the USB PHY, and PLLs. A programmable brown-out detector is included in the regulator that can be used by the system to determine when the load capability of the regulator is being exceeded to take the necessary steps. Current-limiting can be enabled to allow for in-rush current requirements during start-up, if needed. Active-pull-down can also be enabled for systems requiring this feature.

For additional information, see the *i.MX RT1040 Reference Manual* (IMXRT1040RM).

4.2.2.2.2 LDO_2P5

The LDO_2P5 module implements a programmable linear-regulator function from VDD_HIGH_IN (see Table 11 for minimum and maximum input requirements). Typical Programming Operating Range is 2.25 V to 2.75 V with the nominal default setting as 2.5 V. LDO_2P5 supplies the USB PHY, E-fuse module, and PLLs. A programmable brown-out detector is included in the regulator that can be used by the system to determine when the load capability of the regulator is being exceeded, to take the necessary steps. Current-limiting can be enabled to allow for in-rush current requirements during start-up, if needed. Active-pull-down can also be enabled for systems requiring this feature. An alternate self-biased low-precision weak-regulator is included that can be enabled for applications needing to keep the output voltage alive during low-power modes where the main regulator driver and its associated global bandgap reference module are disabled. The output of the weak-regulator is not programmable and is a function of the input supply as well as the load current. Typically, with a 3 V input supply the weak-regulator output is 2.525 V and its output impedance is approximately 40 Ω.

For additional information, see the *i.MX RT1040 Reference Manual* (IMXRT1040RM) .

Table 16. LDO_2P5 Voltage Regulator Electrical Specifications

Parameter	Symbol	Min	Typ	Max	Unit
Input Analog Supply		2.7	3	3.3	V
Input Digital Supply		1.0	1	1.1	V
Typical Current Consumption			0.75		mA
Typical Low Power Current Consumption			0.05		mA
Regulator Maximum Output Current (at 500 mV drop-out)		350			mA
Regulator Output Programming Range (default 2.5 V)		2		2.75	V
Regulator Output Programming Step Size			25		mV

Table continues on the next page...

All information provided in this document is subject to legal disclaimers.

© 2025 NXP B.V. All rights reserved.

Downloaded from Arrow.com.

Table 16. LDO_2P5 Voltage Regulator Electrical Specifications *...continued*

Parameter	Symbol	Min	Typ	Max	Unit
Regulator Brown-out Offset Programming Range (default 75 mV)		0		75	mV
Regulator Brown-out Offset Programming Step Size			25		mV
Minimum External Decoupling Capacitor (Low-ESR)			1		µF

4.2.2.2.3 LDO_USB

The LDO_USB module implements a programmable linear-regulator function from the USB VBUSB voltages (4.4 V–5.5 V) to produce a nominal 3.0 V output voltage. A programmable brown-out detector is included in the regulator that can be used by the system to determine when the load capability of the regulator is being exceeded, to take the necessary steps. This regulator has a built in power-mux that allows the user to select to run the regulator from either USB VBUS supply, when both are present. If only one of the USB VBUS voltages is present, then, the regulator automatically selects this supply. Current limit is also included to help the system meet in-rush current targets.

For additional information, see the *i.MX RT1040 Reference Manual* (IMXRT1040RM).

4.2.2.2.4 DCDC

DCDC can be configured to operate on power-save mode when the load current is less than 50 mA. During the power-save mode, the converter operates with reduced switching frequency in PFM mode and with a minimum quiescent current to maintain high efficiency.

DCDC can detect the peak current in the P-channel switch. When the peak current exceeds the threshold, DCDC will give an alert signal, and the threshold can be configured. By this way, DCDC can roughly detect the current loading.

DCDC also includes the following protection functions:

- Over current protection. In run mode, DCDC shuts down when detecting abnormal large current in the P-type power switch.
- Over voltage protection. DCDC shuts down when detecting the output voltage is too high.
- Low voltage detection. DCDC shuts down when detecting the input voltage is too low.

For additional information, see the *i.MX RT1040 Reference Manual* (IMXRT1040RM).

The following table shows the LDO_USB Voltage Regulator Electrical Specifications.

4.2.3 PLL's electrical characteristics

This section provides PLL electrical characteristics.

4.2.3.1 Audio/Video PLL's electrical parameters

Table 17. Audio/Video PLL's electrical parameters

Parameter	Value
Clock output range	650 MHz ~1.3 GHz
Reference clock	24 MHz
Lock time	< 11250 reference cycles

All information provided in this document is subject to legal disclaimers.

© 2025 NXP B.V. All rights reserved.

Downloaded from Arrow.com.

4.2.3.2 System PLL

Table 18. System PLL's electrical parameters

Parameter	Value
Clock output range	528 MHz PLL output
Reference clock	24 MHz
Lock time	< 11250 reference cycles

4.2.3.3 Ethernet PLL

Table 19. Ethernet PLL's electrical parameters

Parameter	Value
Clock output range	1 GHz
Reference clock	24 MHz
Lock time	< 11250 reference cycles

4.2.3.4 USB PLL

Table 20. USB PLL's electrical parameters

Parameter	Value
Clock output range	480 MHz PLL output
Reference clock	24 MHz
Lock time	< 383 reference cycles

4.2.4 Arm PLL

Table 21. Arm PLL's electrical parameters

Parameter	Value
Clock output range	648 MHz ~ 1296 MHz
Reference clock	24 MHz
Lock time	< 2250 reference cycles

4.2.5 On-chip oscillators

4.2.5.1 OSC24M

This block implements an amplifier that when combined with a suitable quartz crystal and external load capacitors implement an oscillator. The oscillator is powered from NVCC_PLL.

All information provided in this document is subject to legal disclaimers.

© 2025 NXP B.V. All rights reserved.

Downloaded from Arrow.com.

The system crystal oscillator consists of a Pierce-type structure running off the digital supply. A straight forward biased-inverter implementation is used.

4.2.5.2 OSC32K

This block implements an amplifier that when combined with a suitable quartz crystal and external load capacitors implement a low power oscillator. It also implements a power mux such that it can be powered from either a ~3 V backup battery (VDD_SNVS_IN) or VDD_HIGH_IN such as the oscillator consumes power from VDD_HIGH_IN when that supply is available and transitions to the backup battery when VDD_HIGH_IN is lost.

In addition, if the clock monitor determines that the OSC32K is not present, then the source of the 32 K will automatically switch to a crude internal ring oscillator. The frequency range of this block is approximately 10–45 kHz. It highly depends on the process, voltage, and temperature.

The OSC32k runs from VDD_SNVS_CAP supply, which comes from the VDD_HIGH_IN/VDD_SNVS_IN. The target battery is a ~3 V coin cell. Proper choice of coin cell type is necessary for chosen VDD_HIGH_IN range. Appropriate series resistor (Rs) must be used when connecting the coin cell. Rs depends on the charge current limit that depends on the chosen coin cell. For example, for Panasonic ML621:

- Average Discharge Voltage is 2.5 V
- Maximum Charge Current is 0.6 mA

For a charge voltage of 3.2 V, Rs = (3.2-2.5)/0.6 m = 1.17 k.

Table 22. OSC32K main characteristics

	Min	Typ	Max	Comments
Fosc	—	32.768 kHz	—	This frequency is nominal and determined mainly by the crystal selected. 32.0 K would work as well.
Current consumption	—	4 µA	—	The 4 µA is the consumption of the oscillator alone (OSC32k). Total supply consumption will depend on what the digital portion of the RTC consumes. The ring oscillator consumes 1 µA when ring oscillator is inactive, 20 µA when the ring oscillator is running. Another 1.5 µA is drawn from vdd_rtc in the power_detect block. So, the total current is 6.5 µA on vdd_rtc when the ring oscillator is not running.
Bias resistor	—	14 MΩ	—	This integrated bias resistor sets the amplifier into a high gain state. Any leakage through the ESD network, external board leakage, or even a scope probe that is significant relative to this value will debias the amp. The debiasing will result in low gain, and will impact the circuit's ability to start up and maintain oscillations.
Crystal Properties				
Cload	—	10 pF	—	Usually crystals can be purchased tuned for different Cloads. This Cload value is typically 1/2 of the capacitances realized on the PCB on either side of the quartz. A higher Cload will decrease oscillation margin, but increases current oscillating through the crystal.
ESR	—	50 kΩ	100 kΩ	Equivalent series resistance of the crystal. Choosing a crystal with a higher value will decrease the oscillating margin.

4.3 I/O parameters

This section provide parameters on I/O interfaces.

All information provided in this document is subject to legal disclaimers.

© 2025 NXP B.V. All rights reserved.

Downloaded from Arrow.com.

4.3.1 I/O DC parameters

This section includes the DC parameters of the following I/O types:

- XTALI and RTC_XTALI (Clock Inputs) DC Parameters
- General Purpose I/O (GPIO)
- LVDS I/O DC Parameters

Note:

The term 'NVCC_XXXX' in this section refers to the associated supply rail of an input or output.

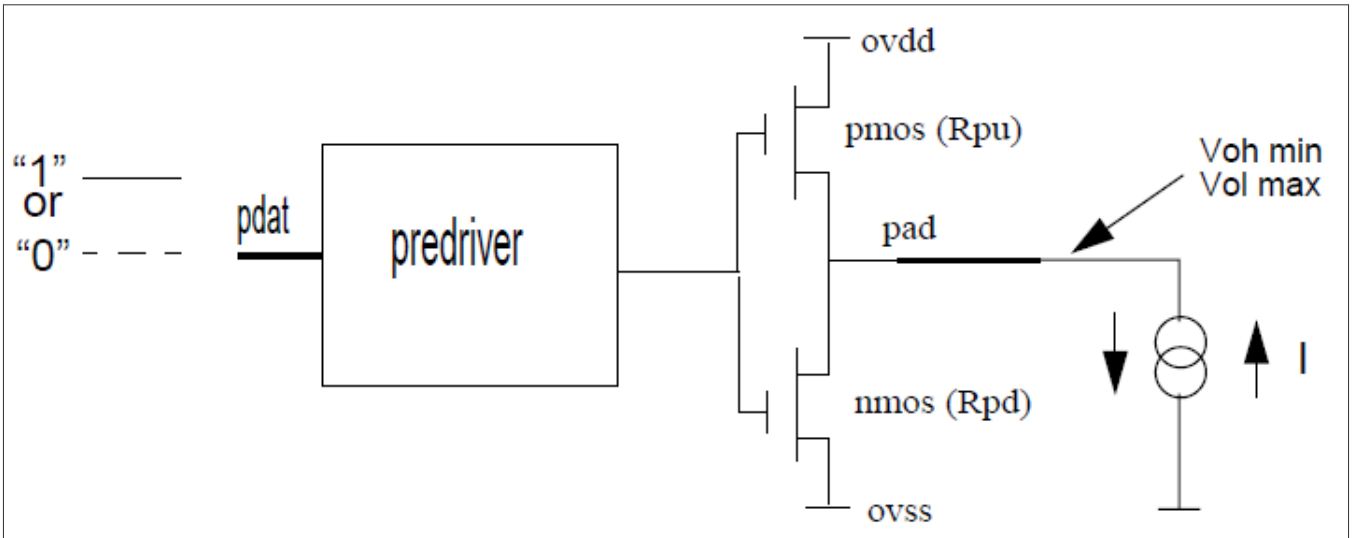

Figure 5. Circuit for parameters Voh and Vol for I/O cells

4.3.1.1 XTALI and RTC_XTALI (clock inputs) DC parameters

Table 23 shows the DC parameters for the clock inputs.

Table 23. XTALI and RTC_XTALI DC parameters[1]

Parameter	Symbol	Test Conditions	Min	Max	Unit
XTALI high-level DC input voltage	Vih	—	0.8 x NVCC_PLL	NVCC_PLL	V
XTALI low-level DC input voltage	Vil	—	0	0.2	V
RTC_XTALI high-level DC input voltage	Vih	—	0.8	1.1	V
RTC_XTALI low-level DC input voltage	Vil	—	0	0.2	V

[1] The DC parameters are for external clock input only.

4.3.1.2 Single voltage general purpose I/O (GPIO) DC parameters

Table 24 shows DC parameters for GPIO pads. The parameters in Table 24 are guaranteed per the operating ranges in Table 11, unless otherwise noted.

All information provided in this document is subject to legal disclaimers.

© 2025 NXP B.V. All rights reserved.

Downloaded from Arrow.com.

Table 24. Single voltage GPIO DC parameters

Parameter	Symbol	Test Conditions	Min	Typical	Max	Units
High-level output voltage[1]	V_{OH}	Ioh= -0.1mA (ipp_dse=001,010) Ioh= -1mA (ipp_dse=011,100,101,110,111)	NVCC_XXXX-0.15	—	–	V
Low-level output voltage[1]	VOL	Iol= 0.1mA (ipp_dse=001,010) Iol= 1mA (ipp_dse=011,100,101,110,111)	–	—	0.15	V
High-level output current	I_{OH}	V_{DDE} = 3.3 V, V_{OH} = V_{DDE} - 0.45 V, ipp_dse as follows: 001 010 011 110 101 110 111	—	-1 -1 -2 -2 -2 -4 -4	—	mA
Low-level output current	I_{OL}	V_{DDE} = 3.3 V, V_{OL} = 0.45 V, ipp_dse as follows: 001 010 011 110 101 110 111	—	1 1 2 2 2 4 4	—	mA
High-Level input voltage[1],[2]	VIH	—	0.7 x NVCC_XXXX	—	NVCC_XXXX	V
Low-Level input voltage[1],[2]	VIL	—	0	—	0.3 x NVCC_XXXX	V
Input Hysteresis (NVCC_XXXX= 1.8V)	VHYS_LowVDD	NVCC_XXXX=1.8V	250	—	—	mV

Table continues on the next page...

All information provided in this document is subject to legal disclaimers.

© 2025 NXP B.V. All rights reserved.

Downloaded from Arrow.com.

Table 24. Single voltage GPIO DC parameters *...continued*

Parameter	Symbol	Test Conditions	Min	Typical	Max	Units
Input Hysteresis (NVCC_XXXX=3.3V)	VHYS_High VDD	NVCC_XXXX=3.3V	250	—	—	mV
Schmitt trigger VT+[2],[3]	VTH+	—	0.5 x NVCC_XXXX	—	—	mV
Schmitt trigger VT-[2],[3]	VTH-	—	—	—	0.5 x NVCC_XXXX	mV
Pull-up resistor (22_kΩ PU)	RPU_22K	Vin=0V	—	—	212	μA
Pull-up resistor (22_kΩ PU)	RPU_22K	Vin=NVCC_XXXX	—	—	1	μA
Pull-up resistor (47_kΩ PU)	RPU_47K	Vin=0V	—	—	100	μA
Pull-up resistor (47_kΩ PU)	RPU_47K	Vin=NVCC_XXXX	—	—	1	μA
Pull-up resistor (100_kΩ PU)	RPU_100K	Vin=0V	—	—	48	μA
Pull-up resistor (100_kΩ PU)	RPU_100K	Vin=NVCC_XXXX	—	—	1	μA
Pull-down resistor (100_kΩ PD)	RPD_100K	Vin=NVCC_XXXX	—	—	48	μA
Pull-down resistor (100_kΩ PD)	RPD_100K	Vin=0V	—	—	1	μA
Input current (no PU/PD)	IIN	VI = 0, VI = NVCC_XXXX	-1	—	1	μA
Keeper Circuit Resistance	R_Keeper	VI =0.3 x NVCC_XXXX, VI = 0.7 x NVCC_XXXX	105	—	175	kΩ

[1] Overshoot and undershoot conditions (transitions above NVCC_XXXX and below GND) on switching pads must be held below 0.6 V, and the duration of the overshoot/undershoot must not exceed 10% of the system clock cycle. Overshoot/ undershoot must be controlled through printed circuit board layout, transmission line impedance matching, signal line termination, or other methods. Non-compliance to this specification may affect device reliability or cause permanent damage to the device.

[2] To maintain a valid level, the transition edge of the input must sustain a constant slew rate (monotonic) from the current DC level through to the target DC level, Vil or Vih. Monotonic input transition time is from 0.1 ns to 1 s.

[3] Hysteresis of 250 mV is guaranteed over all operating conditions when hysteresis is enabled.

4.3.1.3 LVDS I/O DC parameters

The LVDS interface complies with TIA/EIA 644-A standard. See TIA/EIA STANDARD 644-A, "Electrical Characteristics of Low Voltage Differential Signaling (LVDS) Interface Circuits" for details.

Table 25 shows the Low Voltage Differential Signaling (LVDS) I/O DC parameters.

All information provided in this document is subject to legal disclaimers.

© 2025 NXP B.V. All rights reserved.

Downloaded from Arrow.com.

Table 25. LVDS I/O DC characteristics[1]

Parameter	Symbol	Test Conditions	Min	Typ	Max	Unit
Output Differential Voltage	VOD	Rload-100 Ω Diff	250	350	450	mV
Output High Voltage	VOH	IOH = 0 mA	1.25	1.375	1.6	V
Output Low Voltage	VOL	IOL = 0 mA	0.9	1.025	1.25	V
Offset Voltage	VOS	—	1.125	1.2	1.375	V

[1] The LVDS interface is limited to CCM_CLK1_P and CCM_CLK1_N.

4.3.2 I/O AC parameters

This section includes the AC parameters of the following I/O types:

- General Purpose I/O (GPIO)

Figure 6 shows load circuit for output, and Figure 7 shows the output transition time waveform.

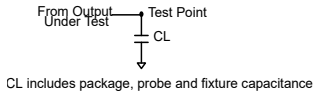

Figure 6. Load circuit for output

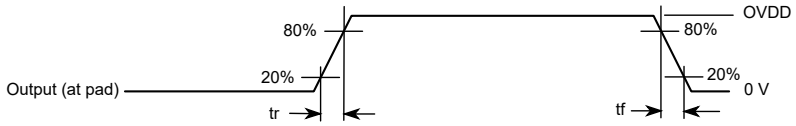

Figure 7. Output transition time waveform

4.3.2.1 General purpose I/O AC parameters

The I/O AC parameters for GPIO in slow and fast modes are presented in the Table 26 and Table 27, respectively. Note that the fast or slow I/O behavior is determined by the appropriate control bits in the IOMUXC control registers.

Table 26. General purpose I/O AC parameters 1.8 V mode

Parameter	Symbol	Test Condition	Min	Typ	Max	Unit
Output Pad Transition Times, rise/fall (Max Drive, ipp_dse=111)	tr, tf	15 pF Cload, slow slew rate 15 pF Cload, fast slew rate	—	—	2.72/2.79 1.51/1.54	ns
Output Pad Transition Times, rise/fall (High Drive, ipp_dse=101)	tr, tf	15 pF Cload, slow slew rate 15 pF Cload, fast slew rate	—	—	3.20/3.36 1.96/2.07	
Output Pad Transition Times, rise/fall (Medium Drive, ipp_dse=100)	tr, tf	15 pF Cload, slow slew rate 15 pF Cload, fast slew rate	—	—	3.64/3.88 2.27/2.53	
Output Pad Transition Times, rise/fall (Low Drive. ipp_dse=011)	tr, tf	15 pF Cload, slow slew rate 15 pF Cload, fast slew rate	—	—	4.32/4.50 3.16/3.17	
Input Transition Times[1]	trm	—	—	—	25	ns

All information provided in this document is subject to legal disclaimers.

© 2025 NXP B.V. All rights reserved.

Downloaded from Arrow.com.

[1] Hysteresis mode is recommended for inputs with transition times greater than 25 ns.

Table 27. General purpose I/O AC parameters 3.3 V mode

Parameter	Symbol	Test Condition	Min	Typ	Max	Unit
Output Pad Transition Times, rise/fall (Max Drive, ipp_dse=101)	tr, tf	15 pF Cload, slow slew rate 15 pF Cload, fast slew rate	—	—	1.70/1.79 1.06/1.15	ns ns
Output Pad Transition Times, rise/fall (High Drive, ipp_dse=011)	tr, tf	15 pF Cload, slow slew rate 15 pF Cload, fast slew rate	—	—	2.35/2.43 1.74/1.77	
Output Pad Transition Times, rise/fall (Medium Drive, ipp_dse=010)	tr, tf	15 pF Cload, slow slew rate 15 pF Cload, fast slew rate	—	—	3.13/3.29 2.46/2.60	
Output Pad Transition Times, rise/fall (Low Drive. ipp_dse=001)	tr, tf	15 pF Cload, slow slew rate 15 pF Cload, fast slew rate	—	—	5.14/5.57 4.77/5.15	
Input Transition Times[1]	trm	—	—	—	25	ns

[1] Hysteresis mode is recommended for inputs with transition times greater than 25 ns.

4.3.3 Output buffer impedance parameters

This section defines the I/O impedance parameters of the i.MX RT1040 processors for the following I/O types:

- Single Voltage General Purpose I/O (GPIO)

Note:

GPIO I/O output driver impedance is measured with "long" transmission line of impedance Ztl attached to I/O pad and incident wave launched into transmission line. Rpu/Rpd and Ztl form a voltage divider that defines specific voltage of incident wave relative to NVCC_XXXX. Output driver impedance is calculated from this voltage divider (see Figure 8).

All information provided in this document is subject to legal disclaimers.

© 2025 NXP B.V. All rights reserved.

Downloaded from Arrow.com.

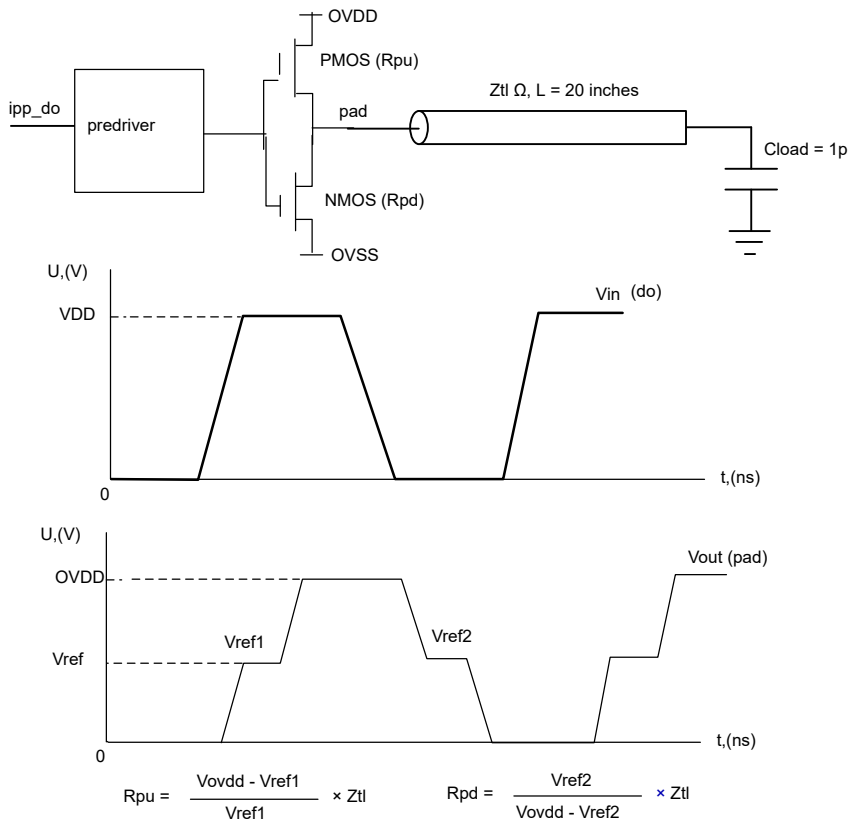

Figure 8. Impedance matching load for measurement

4.3.3.1 Single voltage GPIO output buffer impedance

Table 28 shows the GPIO output buffer impedance (NVCC_XXXX 1.8 V).

Table 28. GPIO output buffer average impedance (NVCC_XXXX 1.8 V)

Parameter	Symbol	Drive Strength (DSE)	Typ Value	Unit
Output Driver Impedance	Rdrv	001	260	Ω
		010	130	
		011	88	
		100	65	
		101	52	
		110	43	
		111	37	

Table 29 shows the GPIO output buffer impedance (NVCC_XXXX 3.3 V).

All information provided in this document is subject to legal disclaimers.

© 2025 NXP B.V. All rights reserved.

Downloaded from Arrow.com.

Table 29. GPIO output buffer average impedance (NVCC_XXXX 3.3 V)

Parameter	Symbol	Drive Strength (DSE)	Typ Value	Unit
Output Driver Impedance	Rdrv	001	157	Ω
		010	78	
		011	53	
		100	39	
		101	32	
		110	26	
		111	23	

4.4 System modules

This section contains the timing and electrical parameters for the modules in the i.MX i.MX RT1040 processor.

4.4.1 Reset timings parameters

Figure 9 shows the reset timing and Table 30 lists the timing parameters.

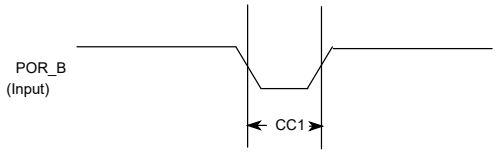

Figure 9. Reset timing diagram

Table 30. Reset timing parameters

ID	Parameter	Min	Max	Unit
CC1	Duration of POR_B to be qualified as valid.	1	—	RTC_XTALI cycle

4.4.2 WDOG reset timing parameters

Figure 10 shows the WDOG reset timing and Table 31 lists the timing parameters.

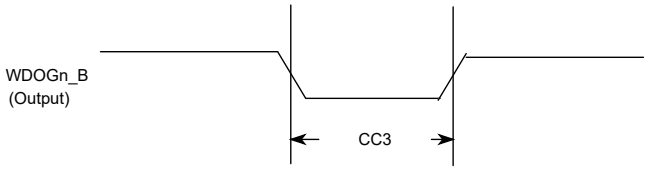

Figure 10. WDOGn_B timing diagram

Table 31. WDOGn_B timing parameters

ID	Parameter	Min	Max	Unit
CC3	Duration of WDOGn_B Assertion	1	—	RTC_XTALI cycle

Note:

All information provided in this document is subject to legal disclaimers.

© 2025 NXP B.V. All rights reserved.

Downloaded from Arrow.com.

RTC_XTALI is approximately 32 kHz. RTC_XTALI cycle is one period or approximately 30 µs.

Note:

WDOGn_B output signals (for each one of the Watchdog modules) do not have dedicated pins, but are muxed out through the IOMUX. See the IOMUX manual for detailed information.

4.4.3 SCAN JTAG Controller (SJC) timing parameters

Figure 11 depicts the SJC test clock input timing. Figure 12 depicts the SJC boundary scan timing. Figure 13 depicts the SJC test access port. Signal parameters are listed in Table 32.

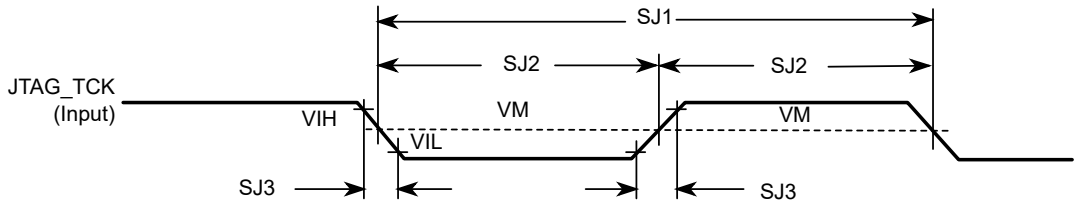

Figure 11. Test clock input timing diagram

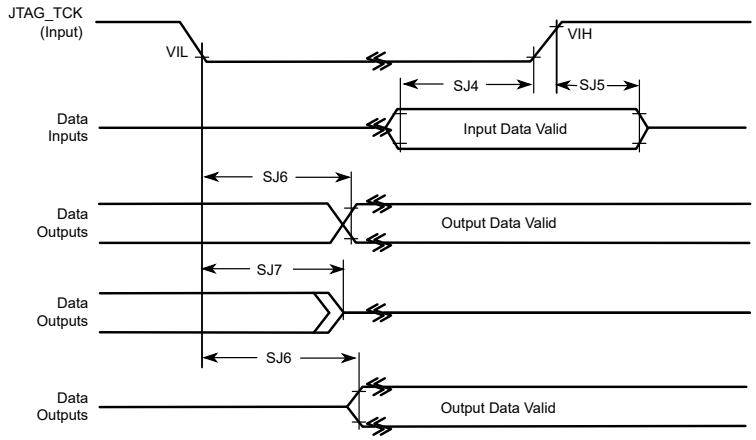

Figure 12. Boundary Scan (JTAG) timing diagram

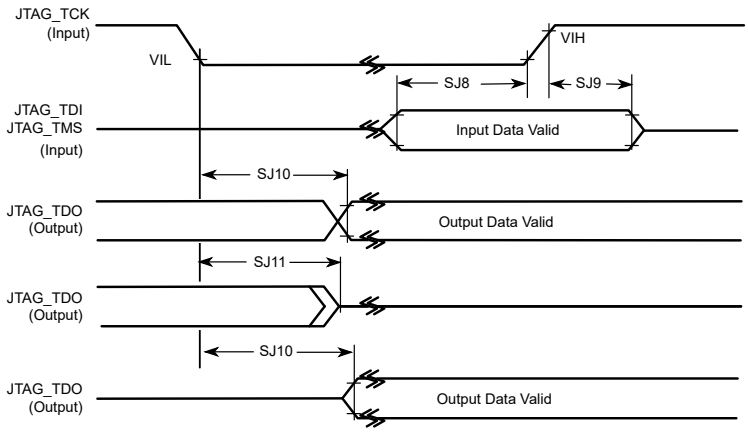

Figure 13. Test access port timing diagram

All information provided in this document is subject to legal disclaimers.

© 2025 NXP B.V. All rights reserved.

Downloaded from Arrow.com.

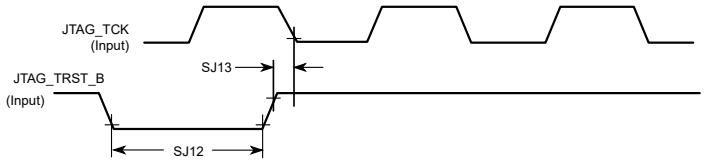

Figure 14. JTAG_TRST_B timing diagram

Table 32. JTAG timing

ID	Parameter[1,2]	All Frequencies		Unit
		Min	Max	
SJ0	JTAG_TCK frequency of operation $1/(3 \cdot T_{DC})$[1]	0.001	22	MHz
SJ1	JTAG_TCK cycle time in crystal mode	45	—	ns
SJ2	JTAG_TCK clock pulse width measured at V_M[2]	22.5	—	ns
SJ3	JTAG_TCK rise and fall times	—	3	ns
SJ4	Boundary scan input data set-up time	5	—	ns
SJ5	Boundary scan input data hold time	24	—	ns
SJ6	JTAG_TCK low to output data valid	—	40	ns
SJ7	JTAG_TCK low to output high impedance	—	40	ns
SJ8	JTAG_TMS, JTAG_TDI data set-up time	5	—	ns
SJ9	JTAG_TMS, JTAG_TDI data hold time	25	—	ns
SJ10	JTAG_TCK low to JTAG_TDO data valid	—	44	ns
SJ11	JTAG_TCK low to JTAG_TDO high impedance	—	44	ns
SJ12	JTAG_TRST_B assert time	100	—	ns
SJ13	JTAG_TRST_B set-up time to JTAG_TCK low	40	—	ns

[1] T_{DC} = target frequency of SJC
[2] V_M = mid-point voltage

4.4.4 Debug trace timing specifications

Table 33. Debug trace operating behaviors

Symbol	Description	Min	Max	Unit
T1	ARM_TRACE_CLK frequency of operation	—	70	MHz
T2	ARM_TRACE_CLK period	1/T1	—	MHz

Table continues on the next page...

All information provided in this document is subject to legal disclaimers.

© 2025 NXP B.V. All rights reserved.

Downloaded from Arrow.com.

Table 33. Debug trace operating behaviors...*continued*

Symbol	Description	Min	Max	Unit
T3	Low pulse width	6	—	ns
T4	High pulse width	6	—	ns
T5	Clock and data rise time	—	1	ns
T6	Clock and data fall time	—	1	ns
T7	Data setup	2	—	ns
T8	Data hold	0.7	—	ns

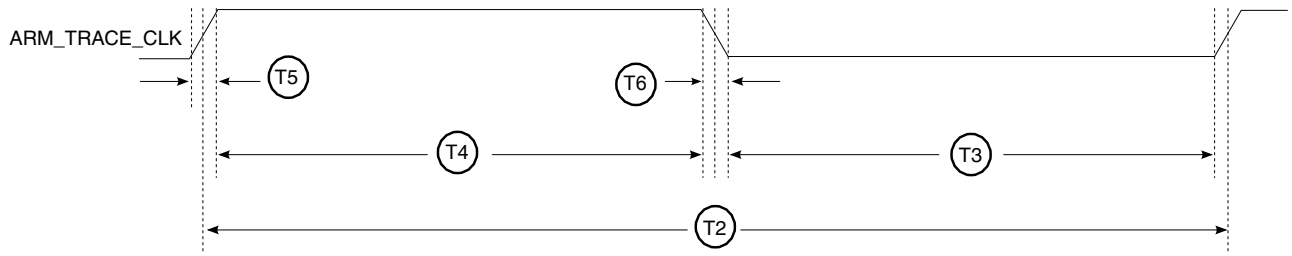

Figure 15. ARM_TRACE_CLK specifications

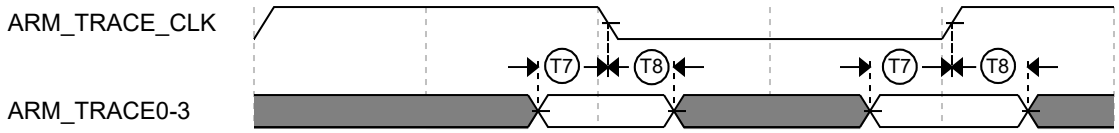

Figure 16. Trace data specifications

4.5 External memory interface

The following sections provide information about external memory interfaces.

4.5.1 SEMC specifications

The following sections provide information on SEMC interface.

Measurements are with a load of 15 pf and an input slew rate of 1 V/ns.

4.5.1.1 SEMC output timing

There are ASYNC and SYNC mode for SEMC output timing.

4.5.1.1.1 SEMC output timing in ASYNC mode

Table 34 shows SEMC output timing in ASYNC mode.

All information provided in this document is subject to legal disclaimers.

© 2025 NXP B.V. All rights reserved.

Downloaded from Arrow.com.

Table 34. SEMC output timing in ASYNC mode

Symbol	Parameter	Min.	Max.	Unit	Comment
	Frequency of operation	—	166	MHz	
T_{CK}	Internal clock period	6	—	ns	
T_{AVO}	Address output valid time	—	2	ns	These timing parameters apply to Address and ADV# for NOR/PSRAM in ASYNC mode.
T_{AHO}	Address output hold time	(TCK - 2) [1]	—	ns	
T_{ADVL}	ADV# low time	(TCK - 1) [2]			
T_{DVO}	Data output valid time	—	2	ns	These timing parameters apply to Data/CLE/ALE and WE# for NAND, apply to Data/DM/CRE for NOR/ PSRAM, apply to Data/DCX and WRX for DBI interface.
T_{DHO}	Data output hold time	(TCK - 2) [3]	—	ns	
T_{WEL}	WE# low time	(TCK - 1) [4]		ns	

[1] Address output hold time is configurable by SEMC_*CR0.AH. AH field setting value is 0x0 in above table. When AH is set with value N, T_{AHO} min time should be ((N + 1) x T_{CK}). See the *i.MX RT1040 Reference Manual* (IMXRT1040RM) for more detail about SEMC_*CR0.AH register field.

[2] ADV# low time is configurable by SEMC_*CR0.AS. AS field setting value is 0x0 in above table. When AS is set with value N, T_{ADL} min time should be ((N + 1) x T_{CK} - 1). See the *i.MX RT1040 Reference Manual* (IMXRT1040RM) for more detail about SEMC_*CR0.AS register field.

[3] Data output hold time is configurable by SEMC_*CR0.WEH. WEH field setting value is 0x0 in above table. When WEH is set with value N, T_{DHO} min time should be ((N + 1) x T_{CK}). See the *i.MX RT1040 Reference Manual* (IMXRT1040RM) for more detail about SEMC_*CR0.WEH register field.

[4] WE# low time is configurable by SEMC_*CR0.WEL. WEL field setting value is 0x0 in above table. When WEL is set with value N, T_{WEL} min time should be ((N + 1) x T_{CK} - 1). See the *i.MX RT1040 Reference Manual* (IMXRT1040RM) for more detail about SEMC_*CR0.WEL register field.

Figure 17 shows the output timing in ASYNC mode.

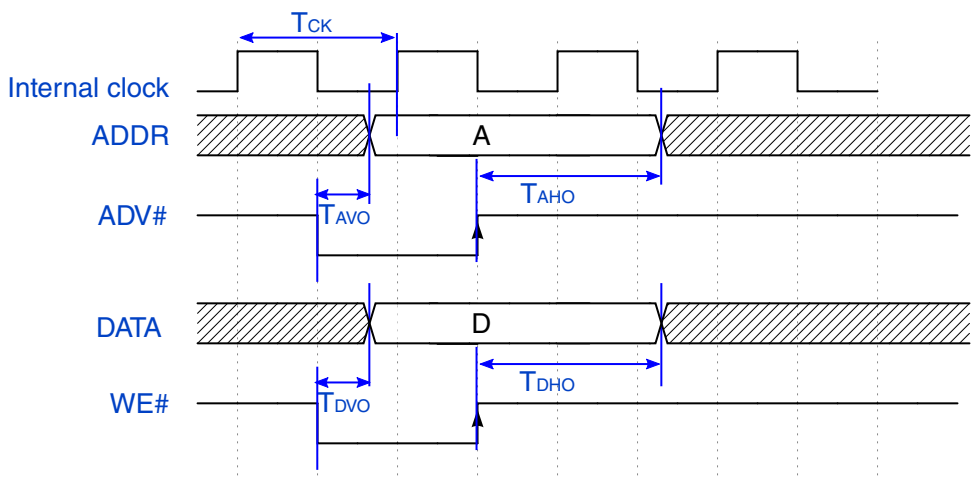

Figure 17. SEMC output timing in ASYNC mode

4.5.1.1.2 SEMC output timing in SYNC mode

Table 35 shows SEMC output timing in SYNC mode.

All information provided in this document is subject to legal disclaimers.

© 2025 NXP B.V. All rights reserved.

Downloaded from Arrow.com.

Table 35. SEMC output timing in SYNC mode

Symbol	Parameter	Min.	Max.	Unit	Comment
	Frequency of operation	—	166	MHz	—
T_{CK}	Internal clock period	6	—	ns	—
T_{DVO}	Data output valid time	—	1	ns	These timing parameters apply to Address/Data/DM/CKE/ control signals with SEMC_CLK for SDRAM.
T_{DHO}	Data output hold time	-1	—	ns	

Figure 18 shows the output timing in SYNC mode.

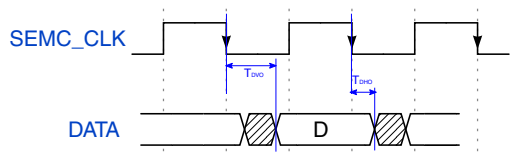

Figure 18. SEMC output timing in SYNC mode

4.5.1.2 SEMC input timing

There are ASYNC and SYNC mode for SEMC input timing.

4.5.1.2.1 SEMC input timing in ASYNC mode

Table 36 shows SEMC output timing in ASYNC mode.

Table 36. SEMC output timing in ASYNC mode

Symbol	Parameter	Min.	Max.	Unit	Comment
T_{IS}	Data input setup	8.67	—	ns	For NAND/NOR/PSRAM/DBI, these timing parameters apply to RE# and Read Data.
T_{IH}	Data input hold	0	—	ns	

Figure 19 shows the input timing in ASYNC mode.

All information provided in this document is subject to legal disclaimers.

© 2025 NXP B.V. All rights reserved.

Downloaded from Arrow.com.

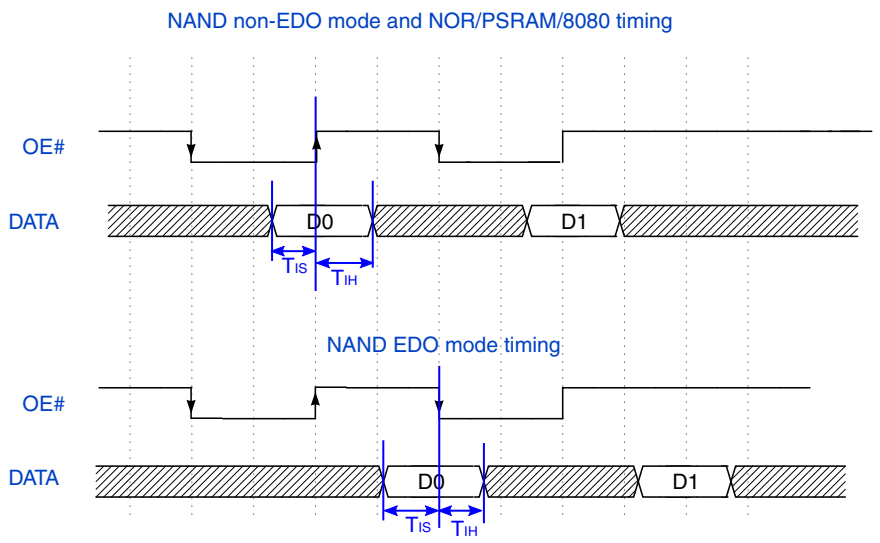

Figure 19. SEMC input timing in ASYNC mode

4.5.1.2.2 SEMC input timing in SYNC mode

Table 37 and Table 38 show SEMC input timing in SYNC mode.

Table 37. SEMC input timing in SYNC mode (SEMC_MCR.DQSMD = 0x0)

Symbol	Parameter	Min.	Max.	Unit	Comment
T_{IS}	Data input setup	8.67	—	ns	—
T_{IH}	Data input hold	0	—	ns	

Table 38. SEMC input timing in SYNC mode (SEMC_MCR.DQSMD = 0x1)

Symbol	Parameter	Min.	Max.	Unit	Comment
T_{IS}	Data input setup	0.6	—	ns	—
T_{IH}	Data input hold	1	—	ns	

Figure 20 shows the input timing in SYNC mode.

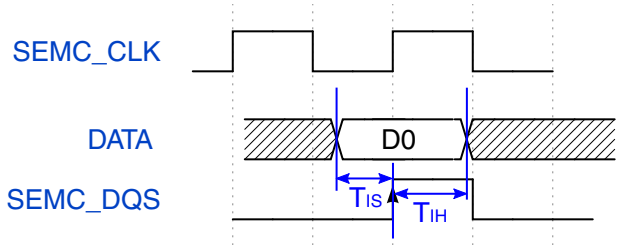

Figure 20. SEMC input timing in SYNC mode

All information provided in this document is subject to legal disclaimers.

© 2025 NXP B.V. All rights reserved.

Downloaded from Arrow.com.

4.5.2 FlexSPI parameters

Measurements are with a load 15 pf and input slew rate of 1 V/ns.

4.5.2.1 FlexSPI input/read timing

There are four sources for the internal sample clock for FlexSPI read data:

- Dummy read strobe generated by FlexSPI controller and looped back internally (FlexSPI*n*_MCR0[RXCLKSRC] = 0x0)
- Dummy read strobe generated by FlexSPI controller and looped back through the DQS pad (FlexSPI*n*_MCR0[RXCLKSRC] = 0x1)
- Read strobe provided by memory device and input from DQS pad (FlexSPI*n*_MCR0[RXCLKSRC] = 0x3)

The following sections describe input signal timing for each of these four internal sample clock sources.

4.5.2.1.1 SDR mode with FlexSPIn_MCR0[RXCLKSRC] = 0x0, 0x1

Table 39. FlexSPI input timing in SDR mode where FlexSPIn_MCR0[RXCLKSRC] = 0X0

Symbol	Parameter	Min	Max	Unit
	Frequency of operation	—	60	MHz
T_{IS}	Setup time for incoming data	8.67	—	ns
T_{IH}	Hold time for incoming data	0	—	ns

Table 40. FlexSPI input timing in SDR mode where FlexSPIn_MCR0[RXCLKSRC] = 0X1

Symbol	Parameter	Min	Max	Unit
	Frequency of operation	—	133	MHz
T_{IS}	Setup time for incoming data	2	—	ns
T_{IH}	Hold time for incoming data	1	—	ns

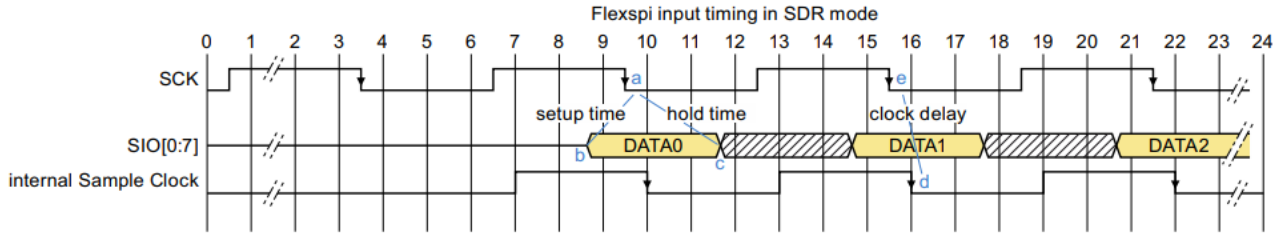

Figure 21. FlexSPI input timing in SDR mode where FlexSPIn_MCR0[RXCLKSRC] = 0X0, 0X1

Note:

Timing shown is based on the memory generating read data on the SCK falling edge, and FlexSPI controller sampling read data on the falling edge.

4.5.2.1.2 SDR mode with FlexSPIn_MCR0[RXCLKSRC] = 0x3

There are two cases when the memory provides both read data and the read strobe in SDR mode:

All information provided in this document is subject to legal disclaimers.

© 2025 NXP B.V. All rights reserved.

Downloaded from Arrow.com.

- A1—Memory generates both read data and read strobe on SCK rising edge (or falling edge)
- A2—Memory generates read data on SCK falling edge and generates read strobe on SCK rising edgeSCK rising edge

Table 41. FlexSPI input timing in SDR mode where FlexSPIn_MCR0[RXCLKSRC] = 0x3 (case A1)

Symbol	Parameter	Value		Unit
		Min	Max	
	Frequency of operation	—	166	MHz
T_{SCKD}	Time from SCK to data valid	—	—	ns
T_{SCKDQS}	Time from SCK to DQS	—	—	ns
T_{SCKD} - T_{SCKDQS}	Time delta between T_{SCKD} and T_{SCKDQS}	-2	2	ns

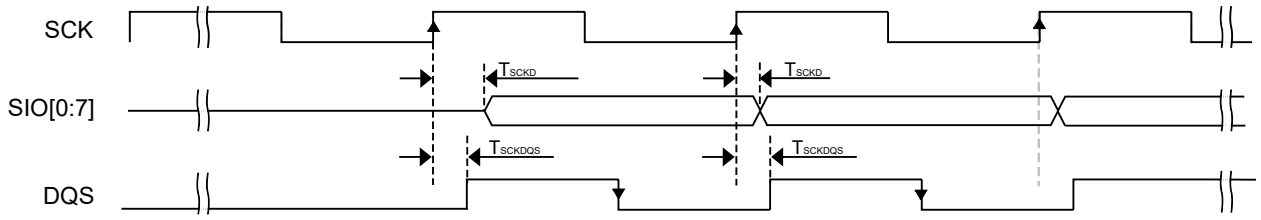

Figure 22. FlexSPI input timing in SDR mode where FlexSPIn_MCR0[RXCLKSRC] = 0X3 (case A1)

Note:

Timing shown is based on the memory generating read data and read strobe on the SCK rising edge. The FlexSPI controller samples read data on the DQS falling edge.

Table 42. FlexSPI input timing in SDR mode where FlexSPIn_MCR0[RXCLKSRC] = 0x3 (case A2)

Symbol	Parameter	Value		Unit
		Min	Max	
	Frequency of operation	—	166	MHz
T_{SCKD}	Time from SCK to data valid	—	—	ns
T_{SCKDQS}	Time from SCK to DQS	—	—	ns
T_{SCKD} - T_{SCKDQS}	Time delta between T_{SCKD} and T_{SCKDQS}	-2	2	ns

All information provided in this document is subject to legal disclaimers.

© 2025 NXP B.V. All rights reserved.

Downloaded from Arrow.com.

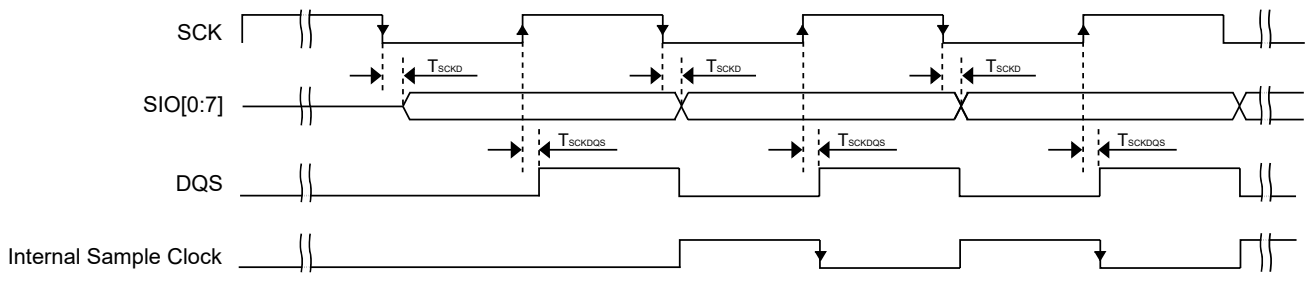

Figure 23. FlexSPI input timing in SDR mode where FlexSPIn_MCR0[RXCLKSRC] = 0X3 (case A2)

Note:

Timing shown is based on the memory generating read data on the SCK falling edge and read strobe on the SCK rising edge. The FlexSPI controller samples read data on a half cycle delayed DQS falling edge.

4.5.2.1.3 DDR mode with FlexSPIn_MCR0[RXCLKSRC] = 0x0, 0x1

Table 43. FlexSPI input timing in DDR mode where FlexSPIn_MCR0[RXCLKSRC] = 0x0

Symbol	Parameter	Min	Max	Unit
	Frequency of operation	—	30	MHz
T_{IS}	Setup time for incoming data	8.67	—	ns
T_{IH}	Hold time for incoming data	0	—	ns

Table 44. FlexSPI input timing in DDR mode where FlexSPIn_MCR0[RXCLKSRC] = 0x1

Symbol	Parameter	Min	Max	Unit
	Frequency of operation	—	66	MHz
T_{IS}	Setup time for incoming data	2	—	ns
T_{IH}	Hold time for incoming data	1	—	ns

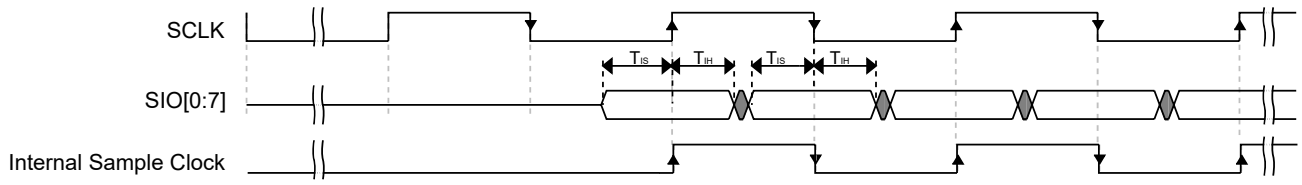

Figure 24. FlexSPI input timing in DDR mode where FlexSPIn_MCR0[RXCLKSRC] = 0x0, 0x1

4.5.2.1.4 DDR mode with FlexSPIn_MCR0[RXCLKSRC] = 0x3

There are two cases when the memory provides both read data and the read strobe in DDR mode:

- B1—Memory generates both read data and read strobe on SCK edge

All information provided in this document is subject to legal disclaimers.

© 2025 NXP B.V. All rights reserved.

Downloaded from Arrow.com.

- B2—Memory generates read data on SCK edge and generates read strobe on SCK2 edge

Table 45. FlexSPI input timing in DDR mode where FlexSPIn_MCR0[RXCLKSRC] = 0x3 (case B1)

Symbol	Parameter	Min	Max	Unit
	Frequency of operation	—	166	MHz
T_{SCKD}	Time from SCK to data valid	—	—	ns
T_{SCKDQS}	Time from SCK to DQS	—	—	ns
T_{SCKD} - T_{SCKDQS}	Time delta between T_{SCKD} and T_{SCKDQS}	-1	1	ns

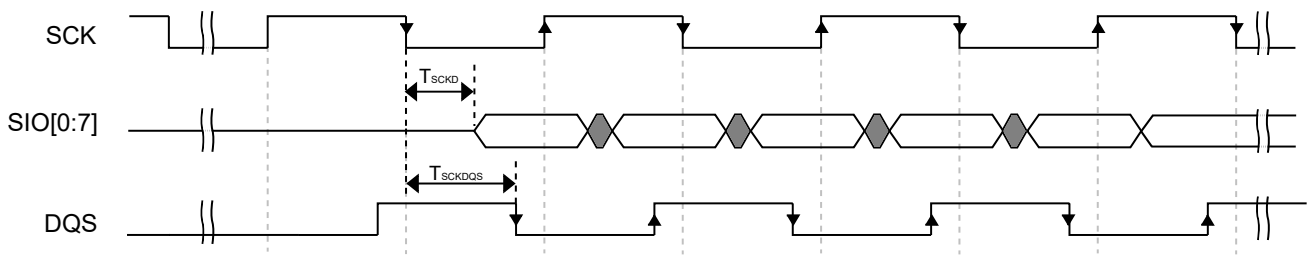

Figure 25. FlexSPI input timing in DDR mode where FlexSPIn_MCR0[RXCLKSRC] = 0x3 (case B1)

Table 46. FlexSPI input timing in DDR mode where FlexSPIn_MCR0[RXCLKSRC] = 0x3 (case B2)

Symbol	Parameter	Min	Max	Unit
	Frequency of operation	—	166	MHz
T_{SCKD}	Time from SCK to data valid	—	—	ns
T_{SCKD} - T_{SCKDQS}	Time delta between T_{SCKD} and T_{SCKDQS}	-1	1	ns

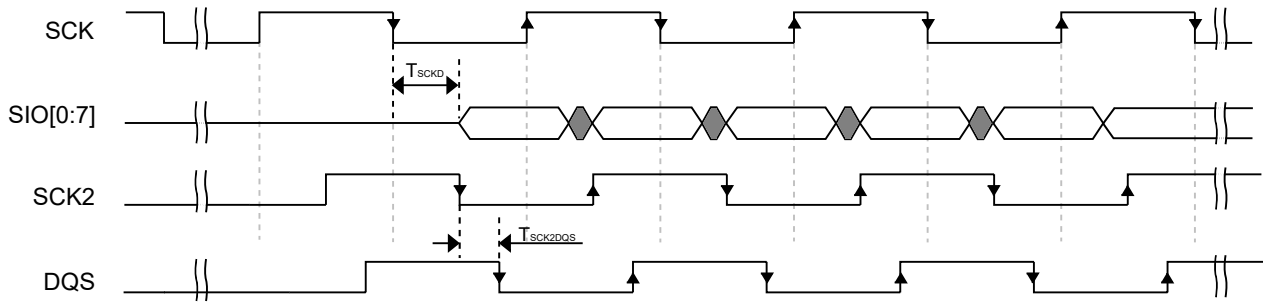

Figure 26. FlexSPI input timing in DDR mode where FlexSPIn_MCR0[RXCLKSRC] = 0x3 (case B2)

4.5.2.2 FlexSPI output/write timing

The following sections describe output signal timing for the FlexSPI controller including control signals and data outputs.

All information provided in this document is subject to legal disclaimers.

© 2025 NXP B.V. All rights reserved.

Downloaded from Arrow.com.

4.5.2.2.1 SDR mode

Table 47. FlexSPI output timing in SDR mode

Symbol	Parameter	Min	Max	Unit
	Frequency of operation	—	166[1]	MHz
T_{ck}	SCK clock period	6.0	—	ns
T_{DVO}	Output data valid time	—	1	ns
T_{DHO}	Output data hold time	-1	—	ns
T_{CSS}	Chip select output setup time	3 x T_{CK} - 1	—	ns
T_{CSH}	Chip select output hold time	3 x T_{CK} + 2	—	ns

[1] The actual maximum frequency supported is limited by the FlexSPI*n*_MCR0[RXCLKSRC] configuration used. Please refer to the FlexSPI SDR input timing specifications.

Note:

T_{CSS} and T_{CSH} are configured by the FlexSPIn_FLSHAxCR1 register, the default values are shown above. See more details in the i.MX RT1040 Reference Manual (IMXRT1040RM).

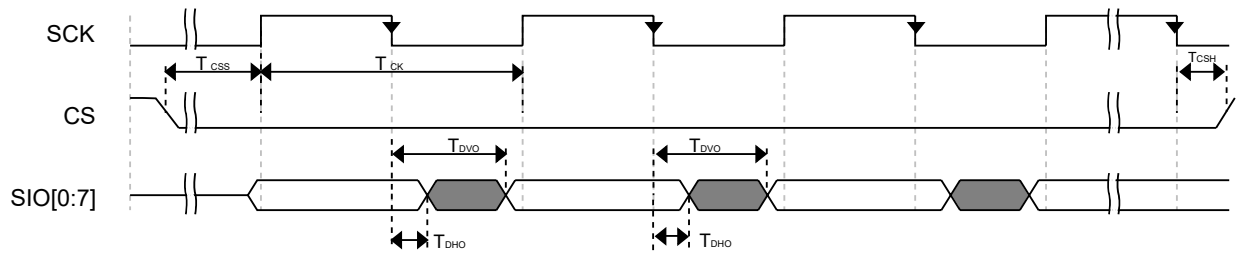

Figure 27. FlexSPI output timing in SDR mode

4.5.2.2.2 SDR mode

Table 48. FlexSPI output timing in SDR mode

Symbol	Parameter	Min	Max	Unit
	Frequency of operation[1]	—	166	MHz
T_{ck}	SCK clock period (FlexSPI*n*_MCR0[RXCLKSRC] = 0x0)	6.0	—	ns
T_{DVO}	Output data valid time	—	2.2	ns
T_{DHO}	Output data hold time	0.8	—	ns
T_{CSS}	Chip select output setup time	3 x T_{CK} /2 - 0.7	—	ns
T_{CSH}	Chip select output hold time	3 x T_{CK} /2 + 0.8	—	ns

[1] The actual maximum frequency supported is limited by the FlexSPI*n*_MCR0[RXCLKSRC] configuration used. Please refer to the FlexSPI SDR input timing specifications.

All information provided in this document is subject to legal disclaimers.

© 2025 NXP B.V. All rights reserved.

Downloaded from Arrow.com.

Note:

T_{CSS} and T_{CSH} are configured by the FlexSPIn_FLSHAxCR1 register, the default values are shown above. See more details in the i.MX RT1040 Reference Manual (IMXRT1040RM).

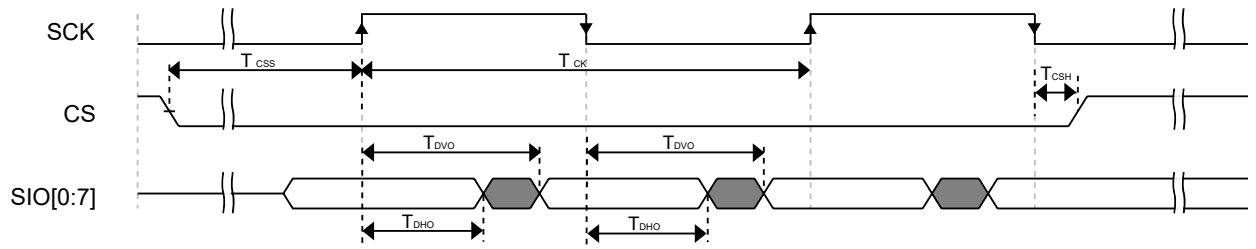

Figure 28. FlexSPI output timing in DDR mode

4.6 Display and graphics

The following sections provide information on display and graphic interfaces

Note: *RT1046 doesn't support this display and graphics.*

.

4.6.1 LCD Controller (LCDIF) timing parameters

Figure 29 shows the LCDIF timing and Table 49 lists the timing parameters.

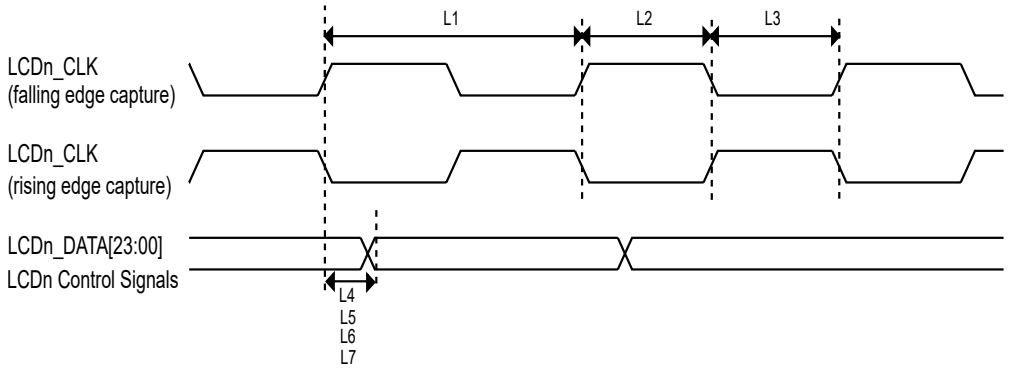

Figure 29. LCD timing

Table 49. LCD timing parameters

ID	Parameter	Symbol	Min	Max	Unit
L1	LCD pixel clock frequency	tCLK(LCD)	—	75	MHz
L2	LCD pixel clock high (falling edge capture)	tCLKH(LCD)	3	—	ns
L3	LCD pixel clock low (rising edge capture)	tCLKL(LCD)	3	—	ns
L4	LCD pixel clock high to data valid (falling edge capture)	td(CLKH-DV)	-1	1	ns
L5	LCD pixel clock low to data valid (rising edge capture)	td(CLKL-DV)	-1	1	ns

Table continues on the next page...

All information provided in this document is subject to legal disclaimers.

© 2025 NXP B.V. All rights reserved.

Downloaded from Arrow.com.

Table 49. LCD timing parameters...*continued*

ID	Parameter	Symbol	Min	Max	Unit
L6	LCD pixel clock high to control signal valid (falling edge capture)	td(CLKH-CTRLV)	-1	1	ns
L7	LCD pixel clock low to control signal valid (rising edge capture)	td(CLKL-CTRLV)	-1	1	ns

4.7 Audio

This section provide information about SAI/I2S and SPDIF.

4.7.1 SAI/I2S switching specifications

This section provides the AC timings for the SAI in master (clocks driven) and slave (clocks input) modes. All timings are given for non-inverted serial clock polarity (SAI_TCR[TSCKP] = 0, SAI_RCR[RSCKP] = 0) and non-inverted frame sync (SAI_TCR[TFSI] = 0, SAI_RCR[RFSI] = 0). If the polarity of the clock and/or the frame sync have been inverted, all the timings remain valid by inverting the clock signal (SAI_BCLK) and/or the frame sync (SAI_FS) shown in the figures below.

Table 50. Master mode SAI timing

Num	Characteristic	Min	Max	Unit
S1	SAI_MCLK cycle time	15	—	ns
S2	SAI_MCLK pulse width high/low	40%	60%	MCLK period
S3	SAI_BCLK cycle time	40	—	ns
S4	SAI_BCLK pulse width high/low	40%	60%	BCLK period
S5	SAI_BCLK to SAI_FS output valid	—	15	ns
S6	SAI_BCLK to SAI_FS output invalid	0	—	ns
S7	SAI_BCLK to SAI_TXD valid	—	15	ns
S8	SAI_BCLK to SAI_TXD invalid	0	—	ns
S9	SAI_RXD/SAI_FS input setup before SAI_BCLK	15	—	ns
S10	SAI_RXD/SAI_FS input hold after SAI_BCLK	0	—	ns

All information provided in this document is subject to legal disclaimers.

© 2025 NXP B.V. All rights reserved.

Downloaded from Arrow.com.

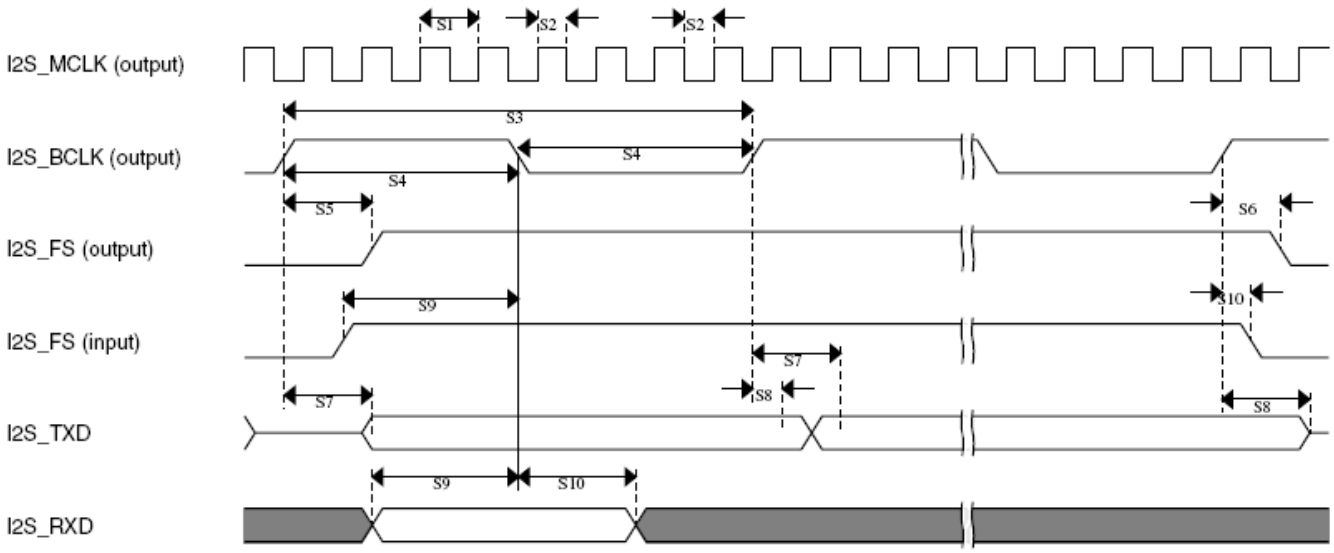

Figure 30. SAI timing—Master modes

Table 51. Slave mode SAI timing

Num	Characteristic	Min	Max	Unit
S11	SAI_BCLK cycle time (input)	40	—	ns
S12	SAI_BCLK pulse width high/low (input)	40%	60%	BCLK period
S13	SAI_FS input setup before SAI_BCLK	10	—	ns
S14	SAI_FA input hold after SAI_BCLK	2	—	ns
S15	SAI_BCLK to SAI_TXD/SAI_FS output valid	—	20	ns
S16	SAI_BCLK to SAI_TXD/SAI_FS output invalid	0	—	ns
S17	SAI_RXD setup before SAI_BCLK	10	—	ns
S18	SAI_RXD hold after SAI_BCLK	2	—	ns

All information provided in this document is subject to legal disclaimers.

© 2025 NXP B.V. All rights reserved.

Downloaded from Arrow.com.

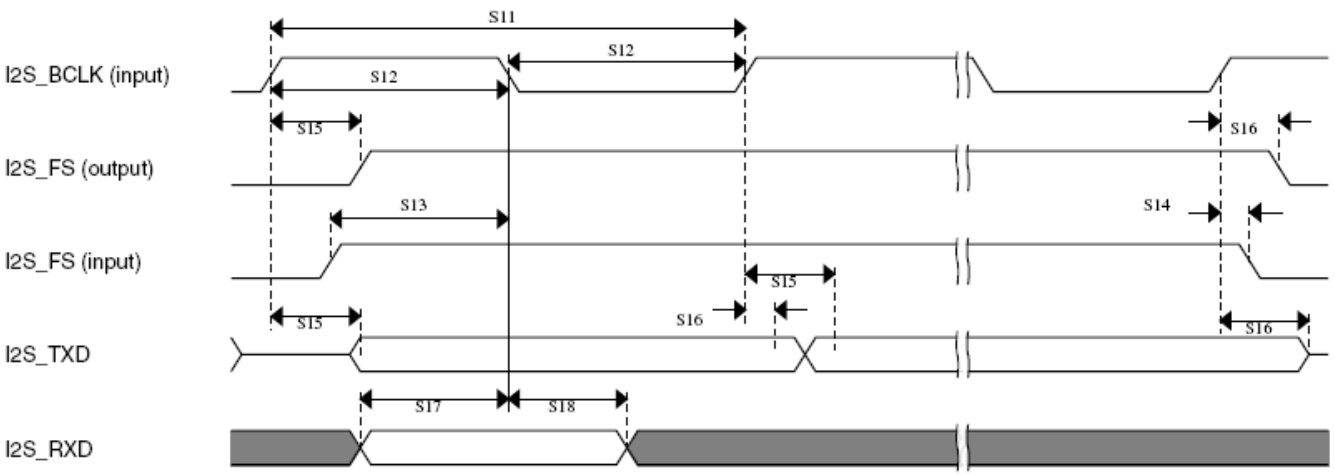

Figure 31. SAI timing—Slave mode

4.7.2 SPDIF timing parameters

The Sony/Philips Digital Interconnect Format (SPDIF) data is sent using the bi-phase marking code. When encoding, the SPDIF data signal is modulated by a clock that is twice the bit rate of the data signal.

Table 52, Figure 32, and Figure 33 show SPDIF timing parameters for the Sony/Philips Digital Interconnect Format (SPDIF), including the timing of the modulating Rx clock (SPDIF_SR_CLK) for SPDIF in Rx mode and the timing of the modulating Tx clock (SPDIF_ST_CLK) for SPDIF in Tx mode.

Table 52. SPDIF timing parameters

Characteristics	Symbol	Timing Parameter Range		Unit
		Min	Max	
SPDIF_IN Skew: asynchronous inputs, no specs apply	—	—	0.7	ns
SPDIF_OUT output (Load = 50pf) • Skew • Transition rising • Transition falling	— — —	— — —	1.5 24.2 31.3	ns
SPDIF_OUT1 output (Load = 30pf) • Skew • Transition rising • Transition falling	— — —	— — —	1.5 13.6 18.0	ns
Modulating Rx clock (SPDIF_SR_CLK) period	srckp	40.0	—	ns
SPDIF_SR_CLK high period	srckph	16.0	—	ns
SPDIF_SR_CLK low period	srckpl	16.0	—	ns

Table continues on the next page...

All information provided in this document is subject to legal disclaimers.

© 2025 NXP B.V. All rights reserved.

Downloaded from Arrow.com.

Table 52. SPDIF timing parameters *...continued*

Characteristics	Symbol	Timing Parameter Range		Unit
		Min	Max	
Modulating Tx clock (SPDIF_ST_CLK) period	stclkp	40.0	—	ns
SPDIF_ST_CLK high period	stclkph	16.0	—	ns
SPDIF_ST_CLK low period	stclkpl	16.0	—	ns

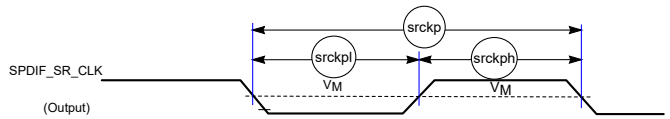

Figure 32. SPDIF_SR_CLK timing diagram

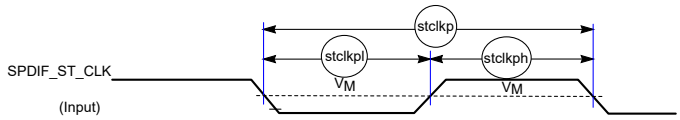

Figure 33. SPDIF_ST_CLK timing diagram

4.8 Analog

The following sections provide information about analog interfaces.

4.8.1 DCDC

Table 53 introduces the DCDC electrical specifications.

Table 53. DCDC electrical specifications

Mode	Buck mode, one output	Notes
Input voltage	3.3 V	Min = 2.8 V, Max = 3.6 V
Output voltage	1.1 V	Configurable 0.8 - 1.575 with 25 mV one step in Run mode
Max loading	500 mA	—
Loading in low power modes	200 µA ~ 30 mA	—
Efficiency	90% max	@150 mA
Low power mode	Open loop mode	Ripple is about 15 mV in Run mode
Run mode	• Always continuous mode	Configurable by register

Table continues on the next page...

All information provided in this document is subject to legal disclaimers.

© 2025 NXP B.V. All rights reserved.

Downloaded from Arrow.com.

Table 53. DCDC electrical specifications *...continued*

Mode	Buck mode, one output	Notes
	• Support discontinuous mode	
Inductor	4.7 µH	—
Capacitor	33 µF	—
Over voltage protection	1.55 V	Detect VDDSOC, when the voltage is higher than 1.6 V, shutdown DCDC.
Over Current protection	1 A	Detect the peak current • Run mode: when the current is larger than 1 A, shutdown DCDC.
Low DCDC_IN detection	2.6 V	Detect the DCDC_IN, when battery is lower than 2.6 V, shutdown DCDC.

4.8.2 A/D converter

This section introduces information about A/D converter.

4.8.2.1 12-bit ADC electrical characteristics

The section provide information about 12-bit ADC electrical characteristics.

4.8.2.1.1 12-bit ADC operating conditions

Table 54. 12-bit ADC operating conditions

Characteristic	Conditions	Symb	Min	Typ[1]	Max	Unit	Comment
Supply voltage	Absolute	V_{DDA}	3.0	-	3.6	V	—
	Delta to VDDA_ADC_3P3 (VDD-VDDA)[2]	ΔV_{DDA}	-100	0	100	mV	—
Ground voltage	Delta to VSS (VSS-VSSAD)	ΔV_{SSAD}	-100	0	100	mV	—
Ref Voltage High	—	V_{DDA}	1.13	V_{DDA}	V_{DDA}	V	—
Ref Voltage Low	—	V_{SS}	V_{SS}	V_{SS}	V_{SS}	V	—
Input Voltage	—	V_{ADIN}	V_{SS}	—	V_{DDA}	V	—
Input Capacitance	8/10/12 bit modes	C_{ADIN}	—	1.5	2	pF	—
Input Resistance	ADLPC=0, ADHSC=1	R_{ADIN}	—	5	7	kohms	—
	ADLPC=0, ADHSC=0		—	12.5	15	kohms	—

Table continues on the next page...

All information provided in this document is subject to legal disclaimers.

© 2025 NXP B.V. All rights reserved.

Downloaded from Arrow.com.

Table 54. 12-bit ADC operating conditions *...continued*

Characteristic	Conditions	Symb	Min	Typ[1]	Max	Unit	Comment
	ADLPC=1, ADHSC=0		—	25	30	kohms	—
Analog Source Resistance	12 bit mode f_{ADCK} = 40 MHz ADLSMP=0, ADSTS=10, ADHSC=1	R_{AS}	—	—	1	kohms	T_{samp}=150 ns
R_{AS} depends on Sample Time Setting (ADLSMP, ADSTS) and ADC Power Mode (ADHSC, ADLPC). See charts for Minimum Sample Time vs R_{AS}							
ADC Conversion Clock Frequency	ADLPC=0, ADHSC=1 12 bit mode	f_{ADCK}	4	—	40	MHz	—
	ADLPC=0, ADHSC=0 12 bit mode		4	—	30	MHz	—
	ADLPC=1, ADHSC=0 12 bit mode		4	—	20	MHz	—

[1] Typical values assume VDDAD = 3.0 V, Temp = 25°C, f_{ADCK}=20 MHz unless otherwise stated. Typical values are for reference only and are not tested in production.

[2] DC potential differences

All information provided in this document is subject to legal disclaimers.

© 2025 NXP B.V. All rights reserved.

Downloaded from Arrow.com.

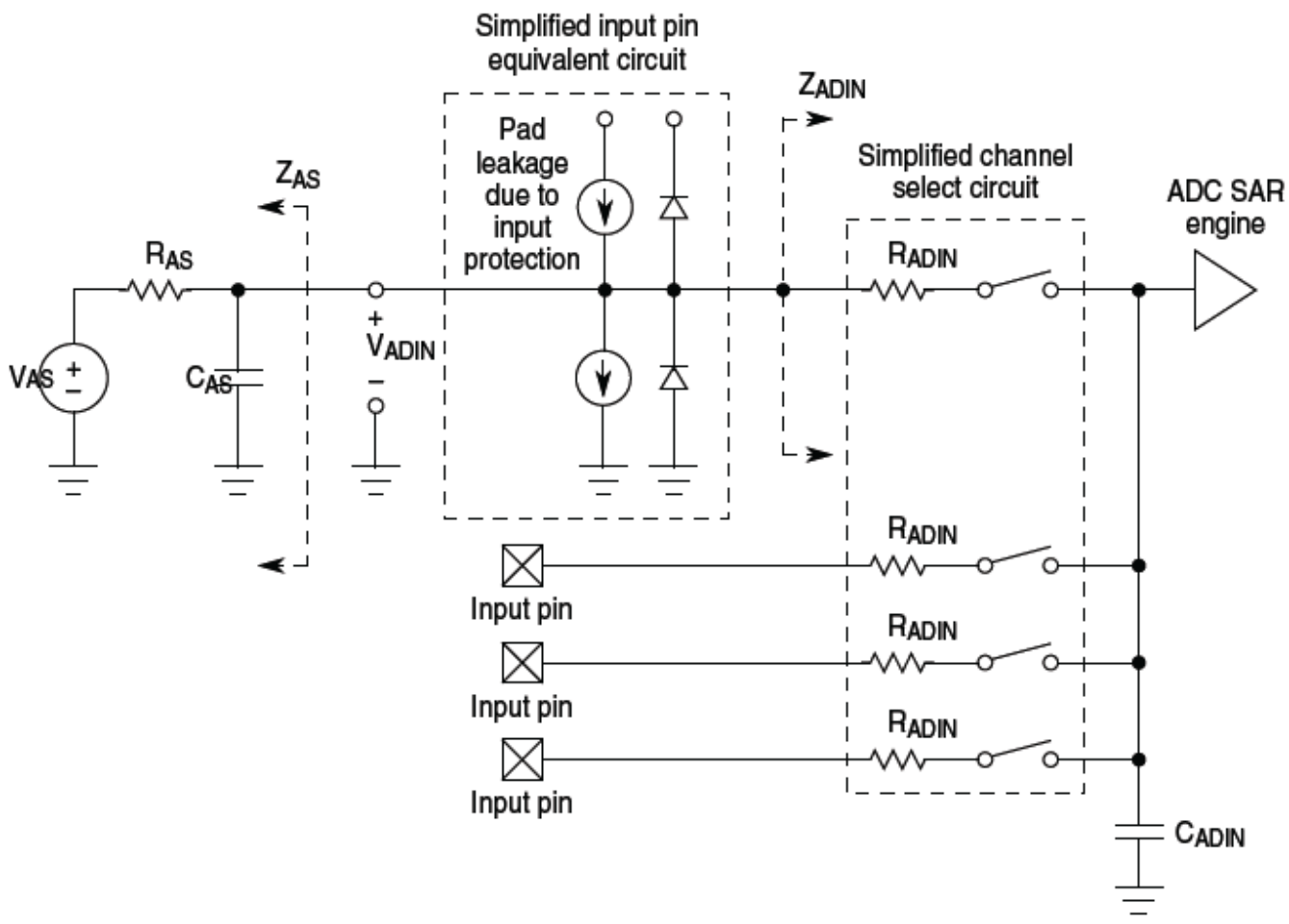

Figure 34. 12-bit ADC input impedance equivalency diagram

4.8.2.1.1.1 12-bit ADC characteristics

Table 55. 12-bit ADC characteristics ($V_{REFH} = V_{DDA}$, $V_{REFL} = V_{SSAD}$)

Characteristic	Conditions[1]	Symb	Min	Typ[2]	Max	Unit	Comment
Supply Current	ADLPC=1, ADHSC=0	I_{DDA}	—	350	—	μA	ADLSMP=0 ADSTS=10 ADCO=1
	ADLPC=0, ADHSC=0			460			
	ADLPC=0, ADHSC=1			750			
Supply Current	Stop, Reset, Module Off	I_{DDA}	—	1.4	2	μA	—

Table continues on the next page...

All information provided in this document is subject to legal disclaimers.

© 2025 NXP B.V. All rights reserved.

Downloaded from Arrow.com.

Table 55. 12-bit ADC characteristics ($V_{REFH} = V_{DDA}$, $V_{REFL} = V_{SSAD}$) *...continued*

Characteristic	Conditions[1]	Symb	Min	Typ[2]	Max	Unit	Comment
ADC Asynchronous Clock Source	ADHSC=0	f_{ADACK}	—	10	—	MHz	$t_{ADACK} = 1/f_{ADACK}$
	ADHSC=1		—	20	—		
Sample Cycles	ADLSMP=0, ADSTS=00	Csamp	—	2	—	cycles	—
	ADLSMP=0, ADSTS=01			4			
	ADLSMP=0, ADSTS=10			6			
	ADLSMP=0, ADSTS=11			8			
	ADLSMP=1, ADSTS=00			12			
	ADLSMP=1, ADSTS=01			16			
	ADLSMP=1, ADSTS=10			20			
	ADLSMP=1, ADSTS=11			24			
Conversion Cycles	ADLSMP=0 ADSTS=00	Cconv	—	28	—	cycles	—
	ADLSMP=0 ADSTS=01			30			
	ADLSMP=0 ADSTS=10			32			
	ADLSMP=0 ADSTS=11			34			
	ADLSMP=1 ADSTS=00			38			
	ADLSMP=1 ADSTS=01			42			
	ADLSMP=1 ADSTS=10			46			

Table continues on the next page...

All information provided in this document is subject to legal disclaimers.

© 2025 NXP B.V. All rights reserved.

Downloaded from Arrow.com.

Table 55. 12-bit ADC characteristics ($V_{REFH} = V_{DDA}$, $V_{REFL} = V_{SSAD}$) *...continued*

Characteristic	Conditions[1]	Symb	Min	Typ[2]	Max	Unit	Comment
	ADLSMP=1, ADSTS=11			50			
Conversion Time	ADLSMP=0 ADSTS=00	Tconv	—	0.7	—	μs	Fadc=40 MHz
	ADLSMP=0 ADSTS=01			0.75			
	ADLSMP=0 ADSTS=10			0.8			
	ADLSMP=0 ADSTS=11			0.85			
	ADLSMP=1 ADSTS=00			0.95			
	ADLSMP=1 ADSTS=01			1.05			
	ADLSMP=1 ADSTS=10			1.15			
	ADLSMP=1, ADSTS=11			1.25			
Total Unadjusted Error	12 bit mode	TUE	—	3.4	—	LSB 1 LSB = $(V_{REFH} - V_{REFL})/2^N$	AVGE = 1, AVGS = 11
	10 bit mode		—	1.5	—		
	8 bit mode		—	1.2	—		
Differential Non-Linearity	12 bit mode	DNL	—	0.76	—	LSB	AVGE = 1, AVGS = 11
	10bit mode		—	0.36	—		
	8 bit mode		—	0.14	—		
Integral Non-Linearity	12 bit mode	INL	—	2.78	—	LSB	AVGE = 1, AVGS = 11
	10bit mode		—	0.61	—		
	8 bit mode		—	0.14	—		
Zero-Scale Error	12 bit mode	E_{ZS}	—	-1.14	—	LSB	AVGE = 1, AVGS = 11
	10bit mode		—	-0.25	—		

Table continues on the next page...

All information provided in this document is subject to legal disclaimers.

© 2025 NXP B.V. All rights reserved.

Downloaded from Arrow.com.

Table 55. 12-bit ADC characteristics ($V_{REFH} = V_{DDA}$, $V_{REFL} = V_{SSAD}$) *...continued*

Characteristic	Conditions[1]	Symb	Min	Typ[2]	Max	Unit	Comment
	8 bit mode		—	-0.19	—		
Full-Scale Error	12 bit mode	E_{FS}	—	-1.06	—	LSB	AVGE = 1, AVGS = 11
	10bit mode		—	-0.03	—		
	8 bit mode		—	-0.02	—		
Effective Number of Bits	12 bit mode	ENOB	10.1	10.7	—	Bits	AVGE = 1, AVGS = 11
Signal to Noise plus Distortion	See ENOB	SINAD	SINAD = 6.02 x ENOB + 1.76			dB	AVGE = 1, AVGS = 11

[1] All accuracy numbers assume the ADC is calibrated with $V_{REFH} = V_{DDAD}$

[2] Typical values assume V_{DDAD} = 3.0 V, Temp = 25°C, F_{adck} = 20 MHz unless otherwise stated. Typical values are for reference only and are not tested in production.

Note:

The ADC electrical spec is met with the calibration enabled configuration.

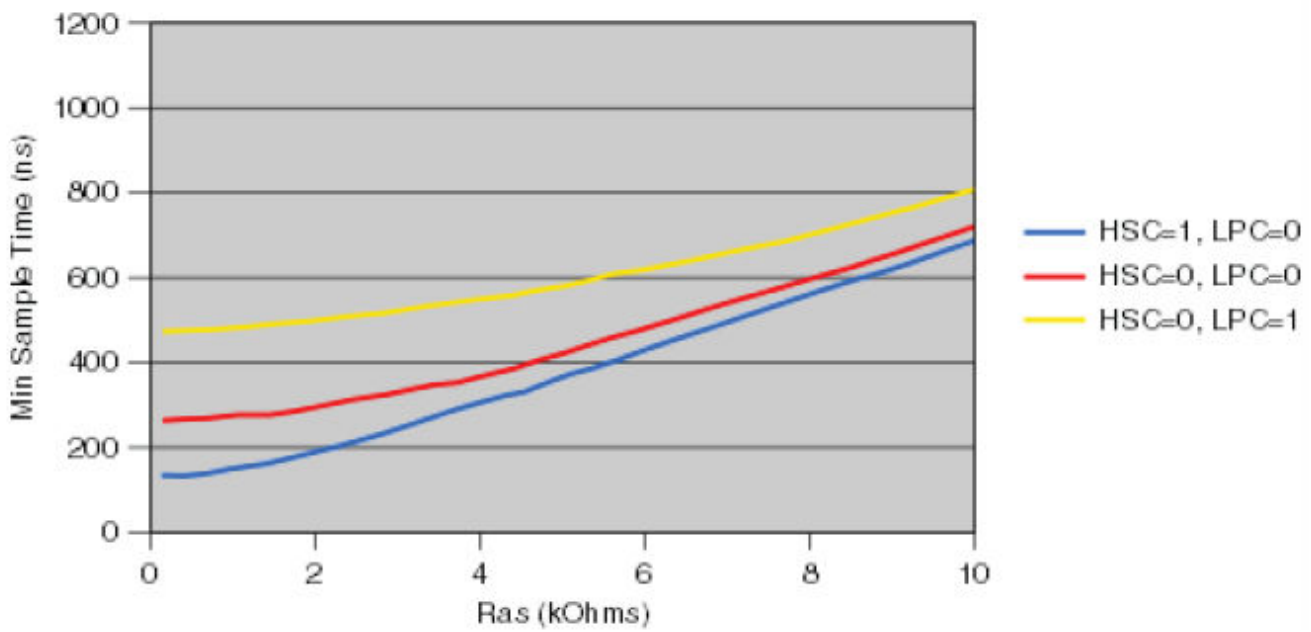

Figure 35. Minimum Sample Time Vs Ras (Cas = 2pF)

All information provided in this document is subject to legal disclaimers.

© 2025 NXP B.V. All rights reserved.

Downloaded from Arrow.com.

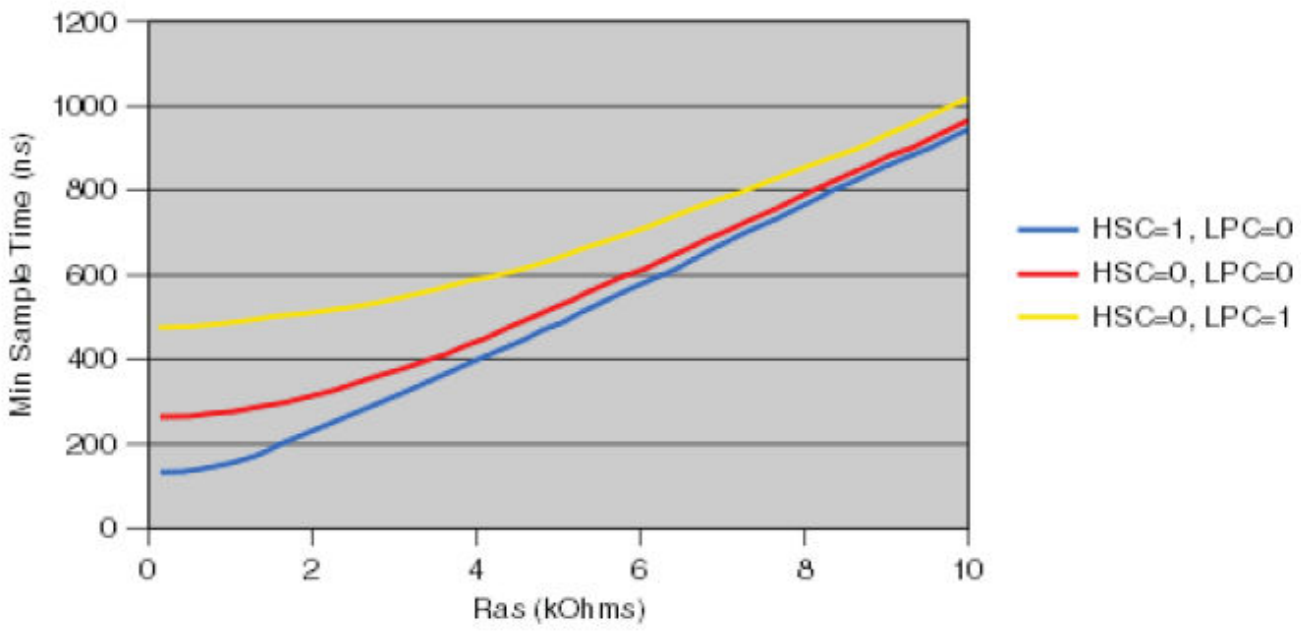

Figure 36. Minimum Sample Time Vs Ras (Cas = 5 pF)

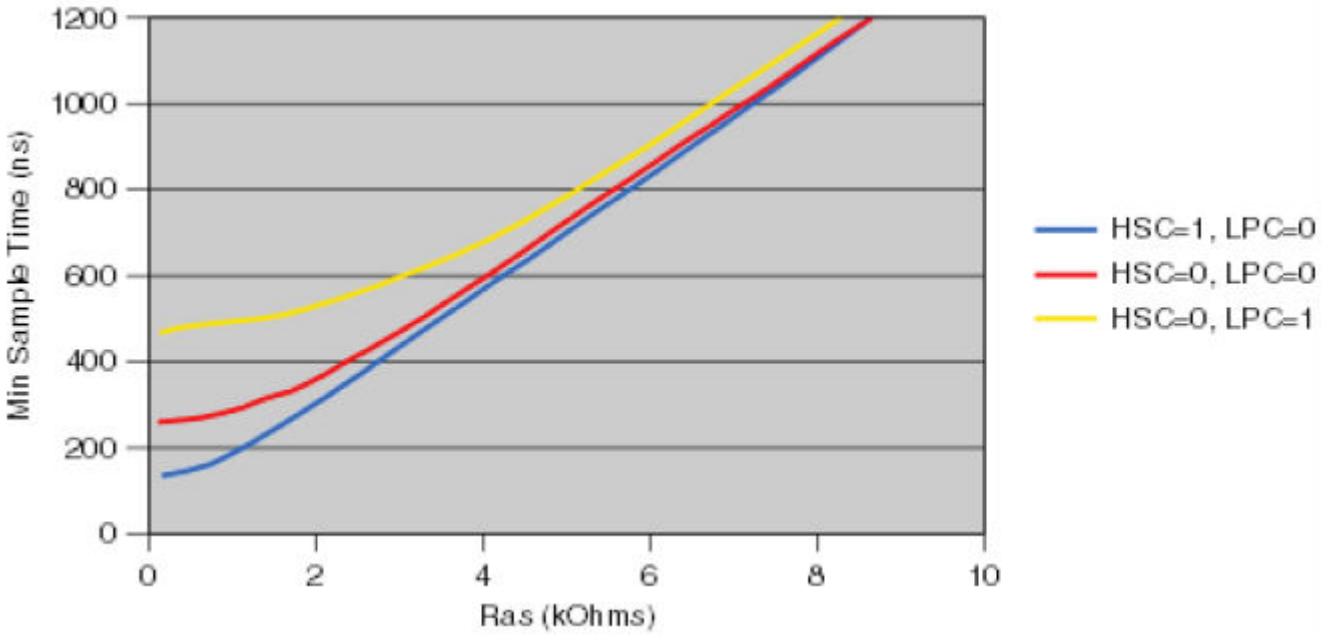

Figure 37. Minimum Sample Time Vs Ras (Cas = 10 pF)

4.8.3 ACMP

Table 56 lists the ACMP electrical specifications.

All information provided in this document is subject to legal disclaimers.

© 2025 NXP B.V. All rights reserved.

Downloaded from Arrow.com.

Table 56. Comparator and 6-bit DAC electrical specifications

Symbol	Description	Min.	Typ.	Max.	Unit
V_{DD}	Supply voltage	3.0	—	3.6	V
I_{DDHS}	Supply current, High-speed mode (EN = 1, PMODE = 1)	—	347	—	μA
I_{DDLS}	Supply current, Low-speed mode (EN = 1, PMODE = 0)	—	42	—	μA
V_{AIN}	Analog input voltage	V_{SS}	—	V_{DD}	V
V_{AIO}	Analog input offset voltage	—	—	21	mV
V_H	Analog comparator hysteresis[1]				mV
	• CR0[HYSTCTR] = 00	—	1	2	
	• CR0[HYSTCTR] = 01	—	21	54	
	• CR0[HYSTCTR] = 10	—	42	108	
	• CR0[HYSTCTR] = 11	—	64	184	
V_{CMPOH}	Output high	V_{DD} - 0.5	—	—	V
V_{CMPOI}	Output low	—	—	0.5	V
t_{DHS}	Propagation delay, high-speed mode (EN = 1, PMODE = 1)	—	25	40	ns
t_{DLS}	Propagation delay, low-speed mode (EN = 1, PMODE = 0)[2]	—	50	90	ns
t_{DInit}	Analog comparator initialization delay[3]	—	1.5	—	μs
I_{DAC6b}	6-bit DAC current adder (enabled)	—	5	—	μA
R_{DAC6b}	6-bit DAC reference inputs	—	V_{DD}	—	V
INL_{DAC6b}	6-bit DAC integral non-linearity	-0.3	—	0.3	LSB[4]
DNL_{DAC6b}	6-bit DAC differential non-linearity	-0.15	—	0.15	LSB[4]

[1] Typical hysteresis is measured with input voltage range limited to 0.7 to V_{DD} - 0.7 V in high speed mode.
[2] Signal swing is 100 mV.
[3] Comparator initialization delay is defined as the time between software writes to the enable comparator module and the comparator output setting to a stable level.
[4] 1 LSB = $V_{reference}$ / 64

4.9 Communication interfaces

The following sections provide the information about communication interfaces.

All information provided in this document is subject to legal disclaimers.

© 2025 NXP B.V. All rights reserved.

Downloaded from Arrow.com.

4.9.1 LPSPI timing parameters

The Low Power Serial Peripheral Interface (LPSPI) provides a synchronous serial bus with master and slave operations. Many of the transfer attributes are programmable. The following tables provide timing characteristics for classic LPSPI timing modes.

All timing is shown with respect to 20% V_{DD} and 80% V_{DD} thresholds, unless noted, as well as input signal transitions of 3 ns and a 30 pF maximum load on all LPSPI pins.

Table 57. LPSPI Master mode timing

Number	Symbol	Description	Min.	Max.	Units	Note
1	f_{SCK}	Frequency of operation	—	f_{periph} / 2	Hz	[1]
2	t_{SCK}	SCK period	2 x t_{periph}	—	ns	[2]
3	t_{Lead}	Enable lead time	1	—	t_{periph}	—
4	t_{Lag}	Enable lag time	1	—	t_{periph}	—
5	t_{WSCK}	Clock (SCK) high or low time	t_{SCK} / 2 - 3	—	ns	—
6	t_{SU}	Data setup time (inputs)	10	—	ns	—
7	t_{HI}	Data hold time (inputs)	2	—	ns	—
8	t_V	Data valid (after SCK edge)	—	8	ns	—
9	t_{HO}	Data hold time (outputs)	0	—	ns	—

[1] Absolute maximum frequency of operation (fop) is 30 MHz. The clock driver in the LPSPI module for f_{periph} must be guaranteed this limit is not exceeded.
[2] $t_{periph} = 1 / f_{periph}$

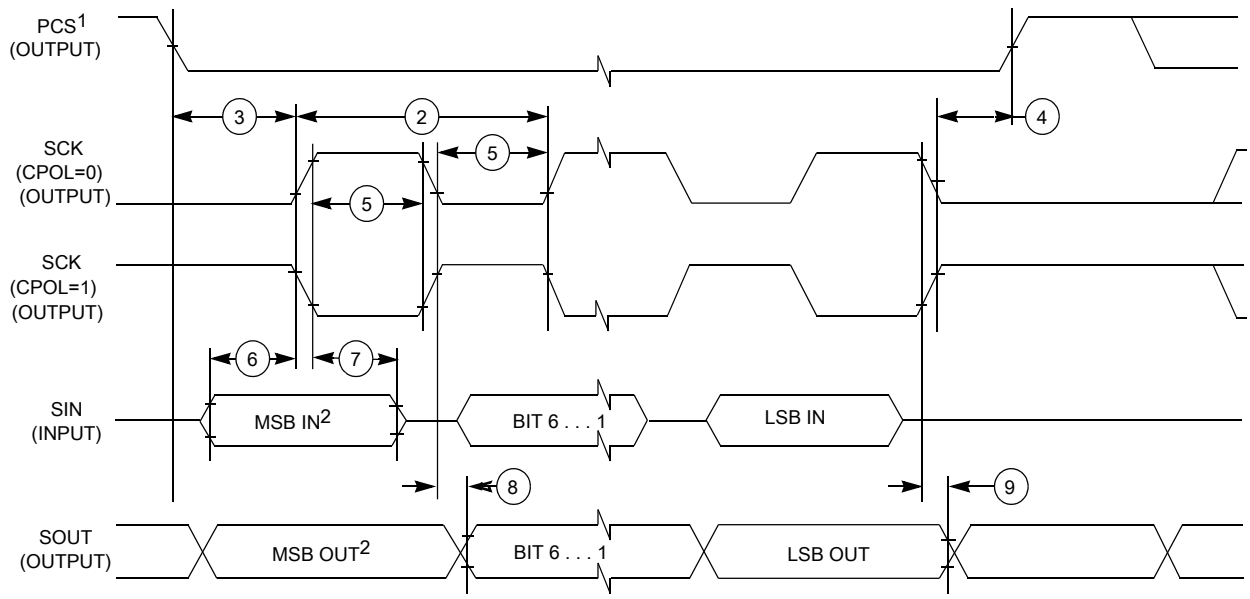

1. If configured as an output.
2. LSBF = 0. For LSBF = 1, bit order is LSB, bit 1, ..., bit 6, MSB.

Figure 38. LPSPI Master mode timing (CPHA = 0)

All information provided in this document is subject to legal disclaimers.

© 2025 NXP B.V. All rights reserved.

Downloaded from Arrow.com.

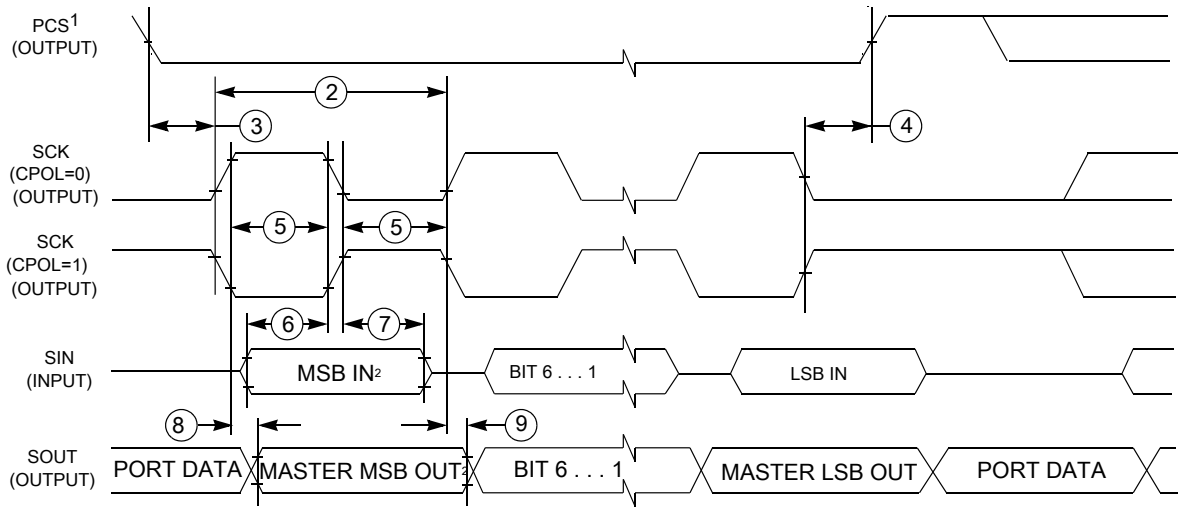

1.If configured as output
2. LSBF = 0. For LSBF = 1, bit order is LSB, bit 1, ..., bit 6, MSB.

Figure 39. LPSPI Master mode timing (CPHA = 1)

Table 58. LPSPI Slave mode timing

Number	Symbol	Description	Min.	Max.	Units	Note
1	f_{SCK}	Frequency of operation	0	f_{periph} / 2	Hz	[1]
2	t_{SCK}	SCK period	2 x t_{periph}	—	ns	[2]
3	t_{Lead}	Enable lead time	1	—	t_{periph}	—
4	t_{Lag}	Enable lag time	1	—	t_{periph}	—
5	t_{WSCK}	Clock (SCK) high or low time	t_{SCK} / 2 - 5	—	ns	—
6	t_{SU}	Data setup time (inputs)	2.7	—	ns	—
7	t_{HI}	Data hold time (inputs)	3.8	—	ns	—
8	t_a	Slave access time	—	t_{periph}	ns	[3]
9	t_{dis}	Slave MISO disable time	—	t_{periph}	ns	[4]
10	t_V	Data valid (after SCK edge)	—	14.5	ns	—
11	t_{HO}	Data hold time (outputs)	0	—	ns	—

[1] Absolute maximum frequency of operation (fop) is 30 MHz. The clock driver in the LPSPI module for f_{periph} must be guaranteed this limit is not exceeded.
[2] $t_{periph} = 1 / f_{periph}$
[3] Time to data active from high-impedance state
[4] Hold time to high-impedance state

All information provided in this document is subject to legal disclaimers.

© 2025 NXP B.V. All rights reserved.

Downloaded from Arrow.com.

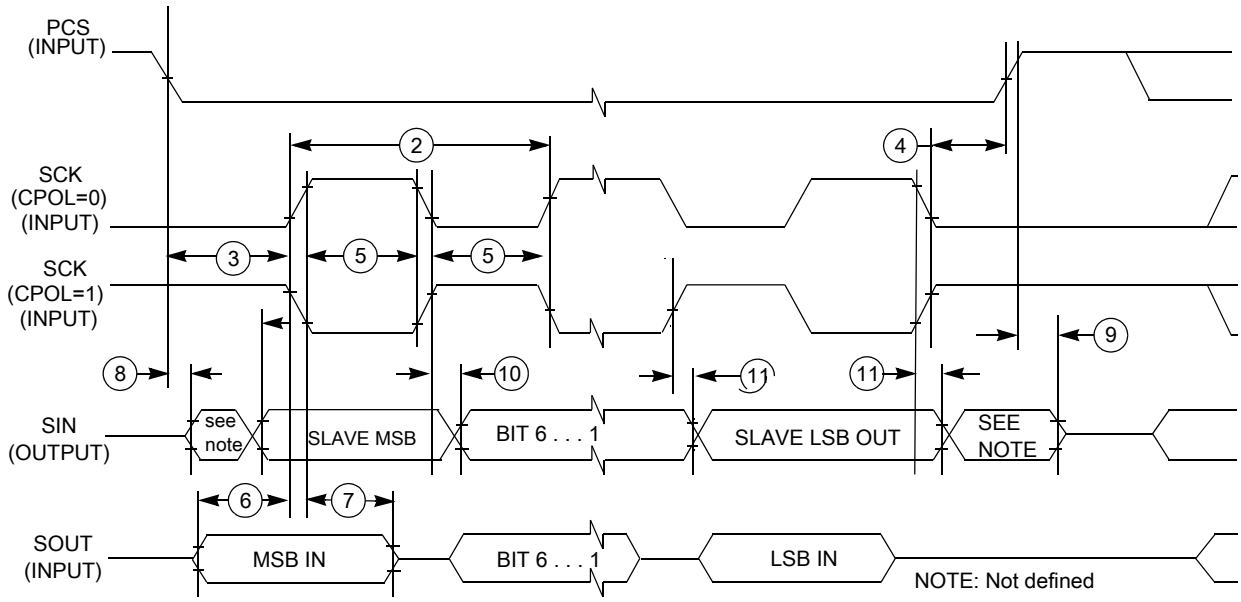

Figure 40. LPSPI Slave mode timing (CPHA = 0)

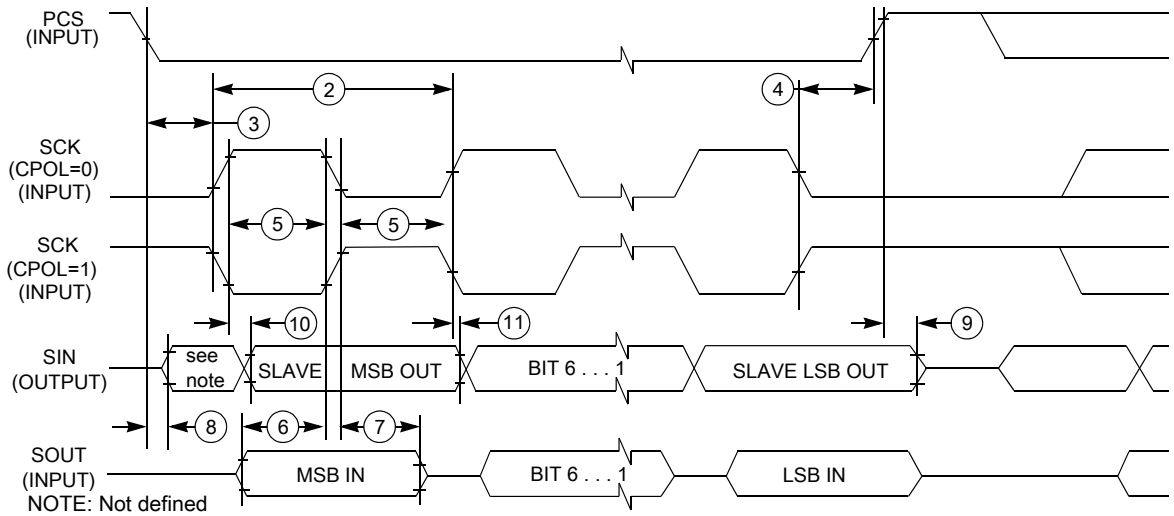

Figure 41. LPSPI Slave mode timing (CPHA = 1)

4.9.2 LPI2C module timing parameters

This section describes the timing parameters of the LPI2C module.

Table 59. LPI2C module timing parameters

Symbol	Description		Min	Max	Unit	Notes
f_{SCL}	SCL clock frequency	Standard mode (Sm)	0	100	kHz	[1], [2]
		Fast mode (Fm)	0	400		
		Fast mode Plus (Fm+)	0	1000		

Table continues on the next page...

All information provided in this document is subject to legal disclaimers.

© 2025 NXP B.V. All rights reserved.

Downloaded from Arrow.com.

Table 59. LPI2C module timing parameters...*continued*

Symbol	Description		Min	Max	Unit	Notes
		Ultra Fast mode (UFm)	0	5000		
		High speed mode (Hs-mode)	0	3400		

[1] Hs-mode is only supported in slave mode.
[2] See General switching specifications.

4.9.3 Ultra High Speed SD/SDIO/MMC Host Interface (uSDHC) AC timing

This section describes the electrical information of the uSDHC, which includes SD/eMMC4.3 (Single Data Rate) timing, eMMC4.4/4.41/4.5 (Dual Date Rate) timing and SDR104/50(SD3.0) timing.

4.9.3.1 SD/eMMC4.3 (single data rate) AC timing

Figure 42 depicts the timing of SD/eMMC4.3, and Table 60 lists the SD/eMMC4.3 timing characteristics.

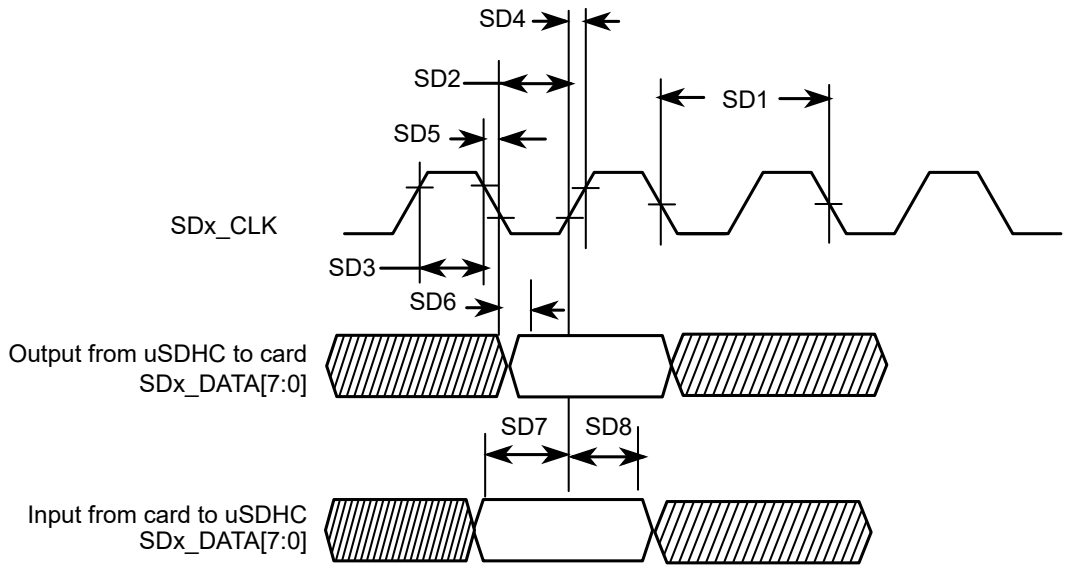

Figure 42. SD/eMMC4.3 timing

Table 60. SD/eMMC4.3 interface timing specification

ID	Parameter	Symbols	Min	Max	Unit
	Card Input Clock				
SD1	Clock Frequency (Low Speed)	f_{PP}[1]	0	400	kHz
	Clock Frequency (SD/SDIO Full Speed/High Speed)	f_{PP}[2]	0	25/50	MHz
	Clock Frequency (MMC Full Speed/High Speed)	f_{PP}[3]	0	20/52	MHz
	Clock Frequency (Identification Mode)	f_{OD}	100	400	kHz
SD2	Clock Low Time	t_{WL}	7	—	ns

Table continues on the next page...

All information provided in this document is subject to legal disclaimers.

© 2025 NXP B.V. All rights reserved.

Downloaded from Arrow.com.

Table 60. SD/eMMC4.3 interface timing specification...*continued*

ID	Parameter	Symbols	Min	Max	Unit
SD3	Clock High Time	t_{WH}	7	—	ns
SD4	Clock Rise Time	t_{TLH}	—	3	ns
SD5	Clock Fall Time	t_{THL}	—	3	ns
uSDHC Output/Card Inputs SD_CMD, SDx_DATAx (Reference to CLK)					
SD6	uSDHC Output Delay	t_{OD}	-6.6	3.6	ns
uSDHC Input/Card Outputs SD_CMD, SDx_DATAx (Reference to CLK)					
SD7	uSDHC Input Setup Time	t_{ISU}	2.5	—	ns
SD8	uSDHC Input Hold Time[4]	t_{IH}	1.5	—	ns

[1] In low speed mode, card clock must be lower than 400 kHz, voltage ranges from 2.7 to 3.6 V.
[2] In normal (full) speed mode for SD/SDIO card, clock frequency can be any value between 0–25 MHz. In high-speed mode, clock frequency can be any value between 0–50 MHz.
[3] In normal (full) speed mode for MMC card, clock frequency can be any value between 0–20 MHz. In high-speed mode, clock frequency can be any value between 0–52 MHz.
[4] To satisfy hold timing, the delay difference between clock input and cmd/data input must not exceed 2 ns.

4.9.3.2 eMMC4.4/4.41 (dual data rate) AC timing

Figure 43 depicts the timing of eMMC4.4/4.41. Table 61 lists the eMMC4.4/4.41 timing characteristics. Be aware that only DATA is sampled on both edges of the clock (not applicable to CMD).

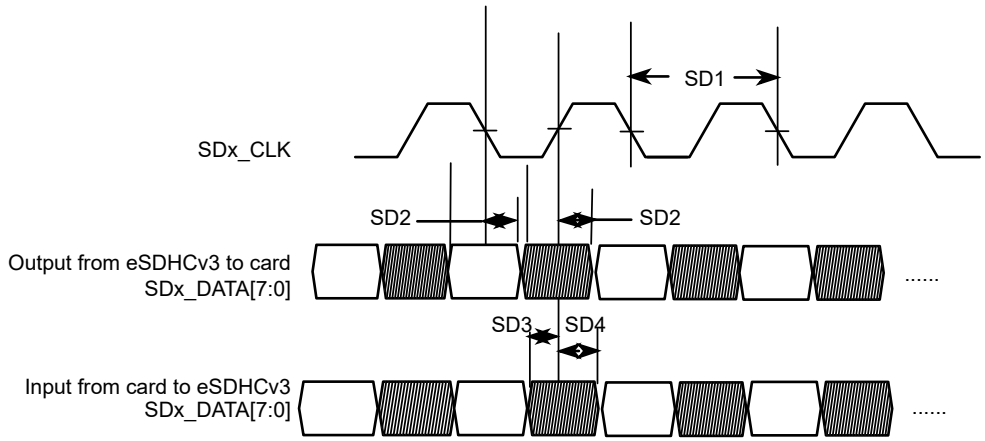

Figure 43. eMMC4.4/4.41 timing

Table 61. eMMC4.4/4.41 interface timing specification

ID	Parameter	Symbols	Min	Max	Unit
Card Input Clock					
SD1	Clock Frequency (eMMC4.4/4.41 DDR)	f_{PP}	0	52	MHz

Table continues on the next page...

All information provided in this document is subject to legal disclaimers.

© 2025 NXP B.V. All rights reserved.

Downloaded from Arrow.com.

Table 61. eMMC4.4/4.41 interface timing specification...*continued*

ID	Parameter	Symbols	Min	Max	Unit
SD1	Clock Frequency (SD3.0 DDR)	f_{PP}	0	50	MHz
uSDHC Output / Card Inputs SD_CMD, SDx_DATAx (Reference to CLK)					
SD2	uSDHC Output Delay	t_{OD}	2.5	7.1	ns
uSDHC Input / Card Outputs SD_CMD, SDx_DATAx (Reference to CLK)					
SD3	uSDHC Input Setup Time	t_{ISU}	1.7	—	ns
SD4	uSDHC Input Hold Time	t_{IH}	1.5	—	ns

4.9.3.3 SDR50/SDR104 AC timing

Figure 44 depicts the timing of SDR50/SDR104, and Table 62 lists the SDR50/SDR104 timing characteristics.

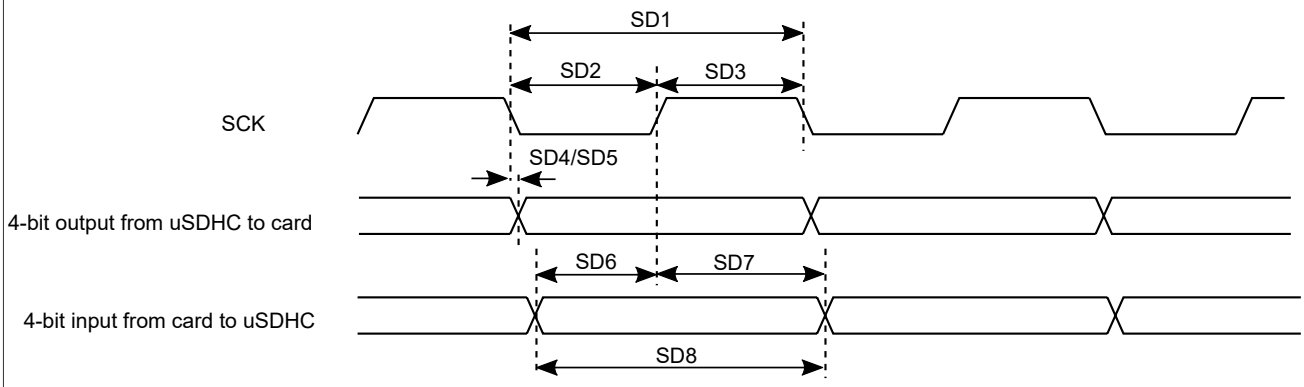

Figure 44. SDR50/SDR104 timing

Table 62. SDR50/SDR104 interface timing specification

ID	Parameter	Symbols	Min	Max	Unit
Card Input Clock					
SD1	Clock Frequency Period	t_{CLK}	5.0	—	ns
SD2	Clock Low Time	t_{CL}	0.46 x t_{CLK}	0.54 x t_{CLK}	ns
SD3	Clock High Time	t_{CH}	0.46 x t_{CLK}	0.54 x t_{CLK}	ns
uSDHC Output/Card Inputs SD_CMD, SDx_DATAx in SDR50 (Reference to CLK)					
SD4	uSDHC Output Delay	t_{OD}	–3	1	ns
uSDHC Output/Card Inputs SD_CMD, SDx_DATAx in SDR104 (Reference to CLK)					
SD5	uSDHC Output Delay	t_{OD}	–1.6	1	ns

Table continues on the next page...

All information provided in this document is subject to legal disclaimers.

© 2025 NXP B.V. All rights reserved.

Downloaded from Arrow.com.

Table 62. SDR50/SDR104 interface timing specification...*continued*

ID	Parameter	Symbols	Min	Max	Unit
uSDHC Input/Card Outputs SD_CMD, SDx_DATAx in SDR50 (Reference to CLK)					
SD6	uSDHC Input Setup Time	t_{ISU}	2.5	—	ns
SD7	uSDHC Input Hold Time	t_{IH}	1.5	—	ns
uSDHC Input/Card Outputs SD_CMD, SDx_DATAx in SDR104 (Reference to CLK)[1]					
SD8	Card Output Data Window	t_{ODW}	0.5 x t_{CLK}	—	ns

[1] Data window in SDR104 mode is variable.

4.9.3.4 HS200 mode timing

Figure 45 depicts the timing of HS200 mode, and Table 63 lists the HS200 timing characteristics.

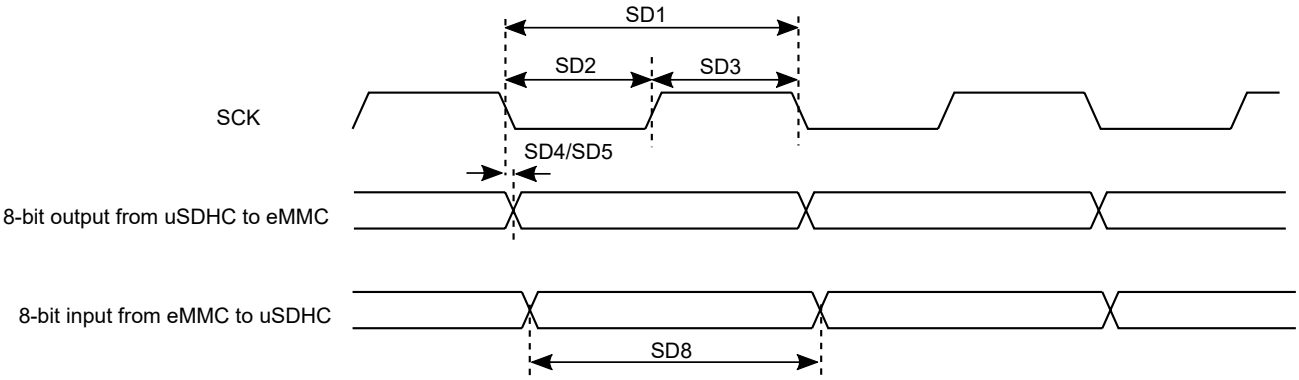

Figure 45. HS200 mode timing

Table 63. HS200 interface timing specification

ID	Parameter	Symbols	Min	Max	Unit
Card Input Clock					
SD1	Clock Frequency Period	t_{CLK}	5.0	—	ns
SD2	Clock Low Time	t_{CL}	0.46 x t_{CLK}	0.54 x t_{CLK}	ns
SD3	Clock High Time	t_{CH}	0.46 x t_{CLK}	0.54 x t_{CLK}	ns
uSDHC Output/Card Inputs SD_CMD, SDx_DATAx in HS200 (Reference to CLK)					
SD5	uSDHC Output Delay	t_{OD}	–1.6	0.74	ns
uSDHC Input/Card Outputs SD_CMD, SDx_DATAx in HS200 (Reference to CLK)[1]					
SD8	Card Output Data Window	t_{ODW}	0.5 x t_{CLK}	—	ns

[1] HS200 is for 8 bits while SDR104 is for 4 bits.

All information provided in this document is subject to legal disclaimers.

© 2025 NXP B.V. All rights reserved.

Downloaded from Arrow.com.

4.9.3.5 Bus operation condition for 3.3 V and 1.8 V signaling

Signaling level of SD/eMMC4.3 and eMMC4.4/4.41 modes is 3.3 V. Signaling level of SDR104/SDR50 mode is 1.8 V. The DC parameters for the NVCC_SD1 supply are identical to those shown in Table 24.

4.9.4 Ethernet controller (ENET) AC electrical specifications

The following timing specs are defined at the chip I/O pin and must be translated appropriately to arrive at timing specs/constraints for the physical interface.

4.9.4.1 ENET MII mode timing

This subsection describes MII receive, transmit, asynchronous inputs, and serial management signal timings.

4.9.4.1.1 MII receive signal timing (ENET_RX_DATA3,2,1,0, ENET_RX_EN, ENET_RX_ER, and ENET_RX_CLK)

The receiver functions correctly up to an ENET_RX_CLK maximum frequency of 25 MHz + 1%. There is no minimum frequency requirement. Additionally, the processor clock frequency must exceed twice the ENET_RX_CLK frequency.

Figure 46 shows MII receive signal timings. Table 64 describes the timing parameters (M1–M4) shown in the figure.

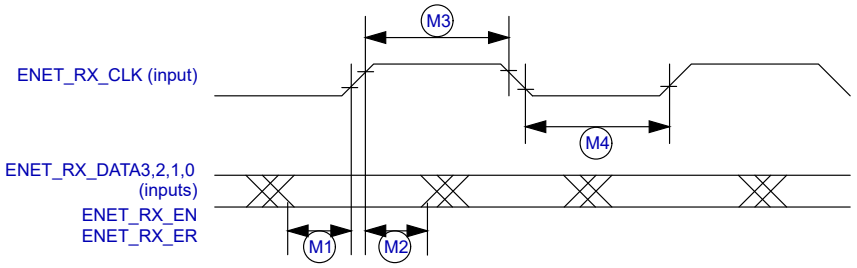

Figure 46. MII receive signal timing diagram

Table 64. MII receive signal timing

ID	Characteristic[1]	Min.	Max.	Unit
M1	ENET_RX_DATA3,2,1,0, ENET_RX_EN, ENET_RX_ER to ENET_RX_CLK setup	5	—	ns
M2	ENET_RX_CLK to ENET_RX_DATA3,2,1,0, ENET_RX_EN, ENET_RX_ER hold	5	—	ns
M3	ENET_RX_CLK pulse width high	35%	65%	ENET_RX_CLK period
M4	ENET_RX_CLK pulse width low	35%	65%	ENET_RX_CLK period

[1] ENET_RX_EN, ENET_RX_CLK, and ENET0_RXD0 have the same timing in 10 Mbps 7-wire interface mode.

4.9.4.1.2 MII transmit signal timing (ENET_TX_DATA3,2,1,0, ENET_TX_EN, ENET_TX_ER, and ENET_TX_CLK)

The transmitter functions correctly up to an ENET_TX_CLK maximum frequency of 25 MHz + 1%. There is no minimum frequency requirement. Additionally, the processor clock frequency must exceed twice the ENET_TX_CLK frequency.

Figure 47 shows MII transmit signal timings. Table 65 describes the timing parameters (M5–M8) shown in the figure.

All information provided in this document is subject to legal disclaimers.

© 2025 NXP B.V. All rights reserved.

Downloaded from Arrow.com.

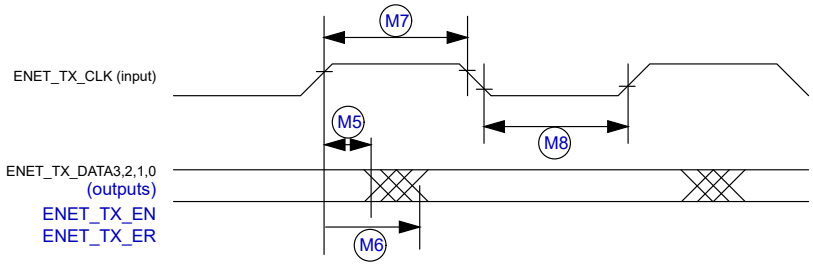

Figure 47. MII transmit signal timing diagram

Table 65. MII transmit signal timing

ID	Characteristic[1]	Min.	Max.	Unit
M5	ENET_TX_CLK to ENET_TX_DATA3,2,1,0, ENET_TX_EN, ENET_TX_ER invalid	5	—	ns
M6	ENET_TX_CLK to ENET_TX_DATA3,2,1,0, ENET_TX_EN, ENET_TX_ER valid	—	20	ns
M7	ENET_TX_CLK pulse width high	35%	65%	ENET_TX_CLK period
M8	ENET_TX_CLK pulse width low	35%	65%	ENET_TX_CLK period

[1] ENET_TX_EN, ENET_TX_CLK, and ENET0_TXD0 have the same timing in 10-Mbps 7-wire interface mode.

4.9.4.1.3 MII asynchronous inputs signal timing (ENET_CRS and ENET_COL)

Figure 48 shows MII asynchronous input timings. Table 66 describes the timing parameter (M9) shown in the figure.

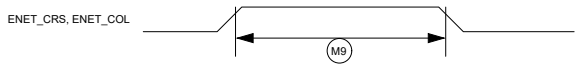

Figure 48. MII asynchronous inputs timing diagram

Table 66. MII asynchronous inputs signal timing

ID	Characteristic	Min.	Max.	Unit
M9[1]	ENET_CRS to ENET_COL minimum pulse width	1.5	—	ENET_TX_CLK period

[1] ENET_COL has the same timing in 10-Mbit 7-wire interface mode.

4.9.4.1.4 MII serial management channel timing (ENET_MDIO and ENET_MDC)

The MDC frequency is designed to be equal to or less than 2.5 MHz to be compatible with the IEEE 802.3 MII specification. However the ENET can function correctly with a maximum MDC frequency of 15 MHz.

Figure 49 shows MII asynchronous input timings. Table 67 describes the timing parameters (M10–M15) shown in the figure.

All information provided in this document is subject to legal disclaimers.

© 2025 NXP B.V. All rights reserved.

Downloaded from Arrow.com.

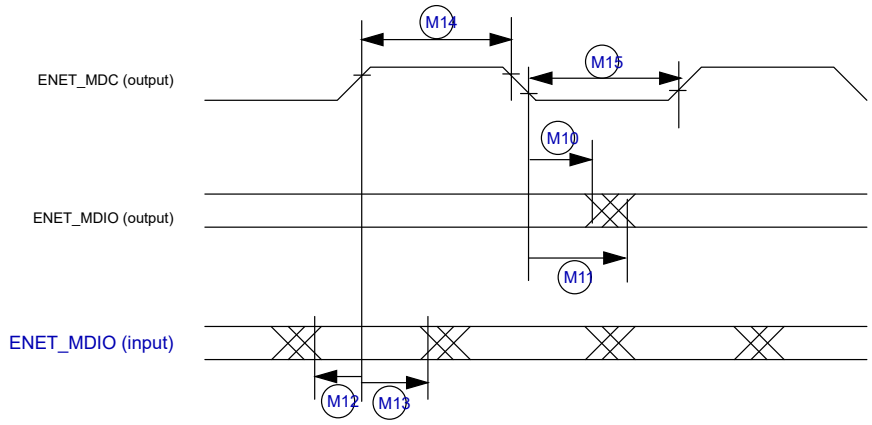

Figure 49. MII serial management channel timing diagram

Table 67. MII serial management channel timing

ID	Characteristic	Min.	Max.	Unit
M10	ENET_MDC falling edge to ENET_MDIO output invalid (min. propagation delay)	0	—	ns
M11	ENET_MDC falling edge to ENET_MDIO output valid (max. propagation delay)	—	5	ns
M12	ENET_MDIO (input) to ENET_MDC rising edge setup	18	—	ns
M13	ENET_MDIO (input) to ENET_MDC rising edge hold	0	—	ns
M14	ENET_MDC pulse width high	40%	60%	ENET_MDC period
M15	ENET_MDC pulse width low	40%	60%	ENET_MDC period

4.9.4.2 RMII mode timing

In RMII mode, ENET_CLK is used as the REF_CLK, which is a 50 MHz ± 50 ppm continuous reference clock. ENET_RX_EN is used as the ENET_RX_EN in RMII. Other signals under RMII mode include ENET_TX_EN, ENET_TX_DATA[1:0], ENET_RX_DATA[1:0] and ENET_RX_ER.

Figure 50 shows RMII mode timings. Table 68 describes the timing parameters (M16–M21) shown in the figure.

All information provided in this document is subject to legal disclaimers.

© 2025 NXP B.V. All rights reserved.

Downloaded from Arrow.com.

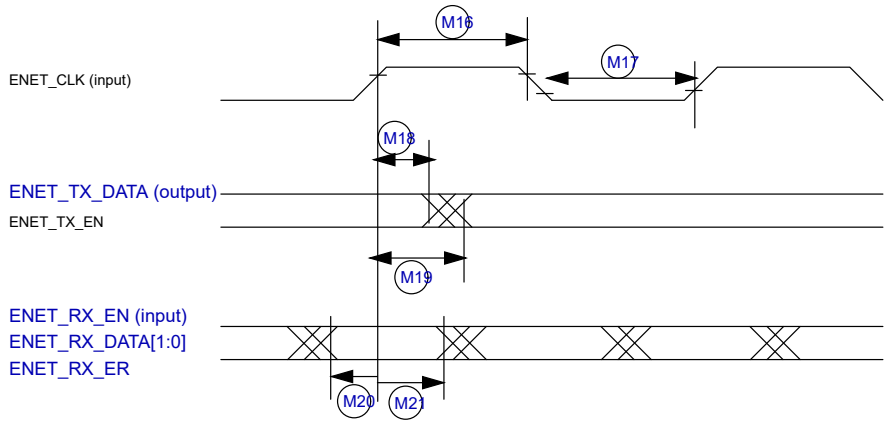

Figure 50. RMII mode signal timing diagram

Table 68. RMII signal timing

ID	Characteristic	Min.	Max.	Unit
M16	ENET_CLK pulse width high	35%	65%	ENET_CLK period
M17	ENET_CLK pulse width low	35%	65%	ENET_CLK period
M18	ENET_CLK to ENET0_TXD[1:0], ENET_TX_DATA invalid	4	—	ns
M19	ENET_CLK to ENET0_TXD[1:0], ENET_TX_DATA valid	—	13	ns
M20	ENET_RX_DATAD[1:0], ENET_RX_EN(ENET_RX_EN), ENET_RX_ER to ENET_CLK setup	2	—	ns
M21	ENET_CLK to ENET_RX_DATAD[1:0], ENET_RX_EN, ENET_RX_ER hold	2	—	ns

4.9.5 Flexible Controller Area Network (FLEXCAN) AC electrical specifications

Please refer to General purpose I/O AC parameters.

4.9.6 LPUART electrical specifications

Please refer to General purpose I/O AC parameters.

4.9.7 USB PHY parameters

This section describes the USB-OTG PHY parameters.

The USB PHY meets the electrical compliance requirements defined in the Universal Serial Bus Revision 2.0 OTG with the following amendments.

- USB ENGINEERING CHANGE NOTICE
  - Title: 5V Short Circuit Withstand Requirement Change
  - Applies to: Universal Serial Bus Specification, Revision 2.0
- Errata for USB Revision 2.0 April 27, 2000 as of 12/7/2000
- USB ENGINEERING CHANGE NOTICE

All information provided in this document is subject to legal disclaimers.

© 2025 NXP B.V. All rights reserved.

Downloaded from Arrow.com.

  - Title: Pull-up/Pull-down resistors
  - Applies to: Universal Serial Bus Specification, Revision 2.0
- USB ENGINEERING CHANGE NOTICE
  - Title: Suspend Current Limit Changes
  - Applies to: Universal Serial Bus Specification, Revision 2.0
- USB ENGINEERING CHANGE NOTICE
  - Title: USB 2.0 Phase Locked SOFs
  - Applies to: Universal Serial Bus Specification, Revision 2.0
- On-The-Go and Embedded Host Supplement to the USB Revision 2.0 Specification
  - Revision 2.0 plus errata and ecn June 4, 2010
- Battery Charging Specification (available from USB-IF)
  - Revision 1.2, December 7, 2010
  - Portable device only

4.10 Timers

This section provides information on timers.

4.10.1 Pulse Width Modulator (PWM) characteristics

This section describes the electrical information of the PWM.

Table 69. PWM timing parameters

Parameter	Symbol	Min	Typ	Max	Unit
PWM Clock Frequency	—	—	—	150	MHz

4.10.2 Quad timer timing

Table 70 listed the timing parameters.

Table 70. Quad timer timing

Characteristic	Symbol	Min[1]	Max	Unit	See Figure
Timer input period	T_{IN}	2T + 6	—	ns	
Timer input high/low period	T_{INHL}	1T + 3	—	ns	
Timer output period	T_{OUT}	33	—	ns	
Timer output high/low period	T_{OUTHL}	16.7	—	ns	

[1] T = clock cycle. For 60 MHz operation, T = 16.7 ns.

All information provided in this document is subject to legal disclaimers.

© 2025 NXP B.V. All rights reserved.

Downloaded from Arrow.com.

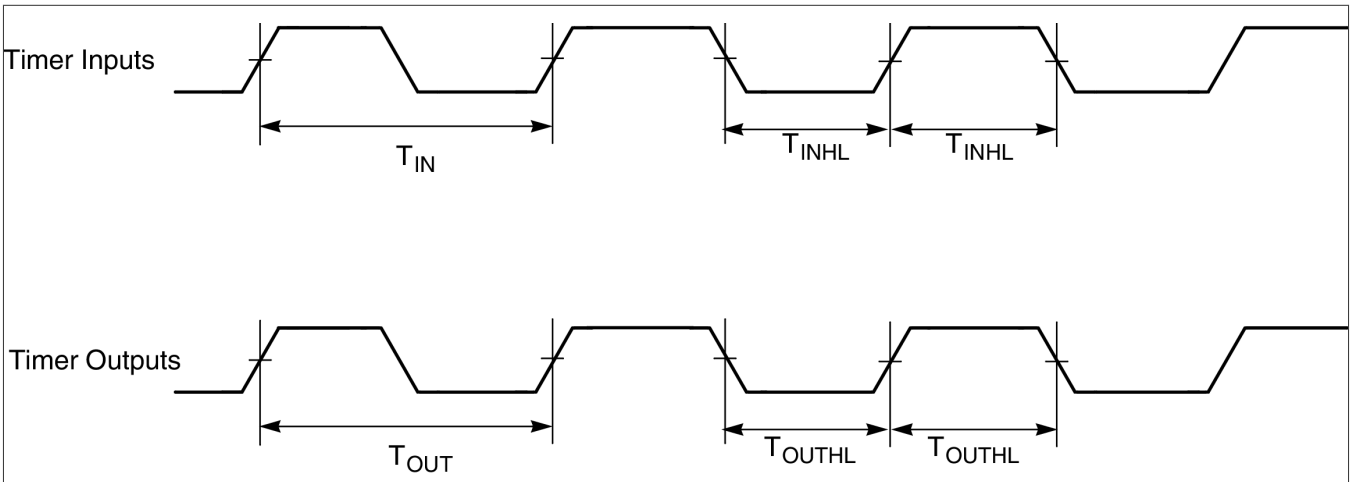

Figure 51. Quad timer timing

5 Boot mode configuration

This section provides information on boot mode configuration pins allocation and boot devices interfaces allocation.

5.1 Boot mode configuration pins

Table 71 provides boot options, functionality, fuse values, and associated pins. Several input pins are also sampled at reset and can be used to override fuse values, depending on the value of BT_FUSE_SEL fuse. The boot option pins are in effect when BT_FUSE_SEL fuse is ‘0’ (cleared, which is the case for an unblown fuse). For detailed boot mode options configured by the boot mode pins, see the i.MX RT1040 Fuse Map document and the System Boot chapter in *i.MX RT1040 Reference Manual* (IMXRT1040RM).

Table 71. Fuses and associated pins used for boot

Pad	Default setting on reset	eFuse name	Details
GPIO_AD_B0_04	100 K pull-down	BOOT_MODE0	
GPIO_AD_B0_05	100 K pull-down	BOOT_MODE1	
GPIO_B0_04	100 K pull-down	BT_CFG[0]	Boot Options, Pin value overrides fuse settings for BT_FUSE_SEL = ‘0’. Signal Configuration as Fuse Override Input at Power Up. These are special I/O lines that control the boot up configuration during product development. In production, the boot configuration can be controlled by fuses.
GPIO_B0_05	100 K pull-down	BT_CFG[1]	
GPIO_B0_06	100 K pull-down	BT_CFG[2]	
GPIO_B0_07	100 K pull-down	BT_CFG[3]	
GPIO_B0_08	100 K pull-down	BT_CFG[4]	
GPIO_B0_09	100 K pull-down	BT_CFG[5]	
GPIO_B0_10	100 K pull-down	BT_CFG[6]	
GPIO_B0_11	100 K pull-down	BT_CFG[7]	

Table continues on the next page...

All information provided in this document is subject to legal disclaimers.

© 2025 NXP B.V. All rights reserved.

Downloaded from Arrow.com.

Table 71. Fuses and associated pins used for boot...*continued*

Pad	Default setting on reset	eFuse name	Details
GPIO_B0_12	100 K pull-down	BT_CFG[8]	
GPIO_B0_13	100 K pull-down	BT_CFG[9]	
GPIO_B0_14	100 K pull-down	BT_CFG[10]	
GPIO_B0_15	100 K pull-down	BT_CFG[11]	

5.2 Boot device interface allocation

The following tables list the interfaces that can be used by the boot process in accordance with the specific boot mode configuration. The tables also describe the interface's specific modes and IOMUXC allocation, which are configured during boot when appropriate.

Table 72. Boot through NAND

PAD Name	IO Function	ALT	Comments
GPIO_EMC_00	semc.DATA[0]	ALT 0	—
GPIO_EMC_01	semc.DATA[1]	ALT 0	—
GPIO_EMC_02	semc.DATA[2]	ALT 0	—
GPIO_EMC_03	semc.DATA[3]	ALT 0	—
GPIO_EMC_04	semc.DATA[4]	ALT 0	—
GPIO_EMC_05	semc.DATA[5]	ALT 0	—
GPIO_EMC_06	semc.DATA[6]	ALT 0	—
GPIO_EMC_07	semc.DATA[7]	ALT 0	—
GPIO_EMC_30	semc.DATA[8]	ALT 0	—
GPIO_EMC_31	semc.DATA[9]	ALT 0	—
GPIO_EMC_32	semc.DATA[10]	ALT 0	—
GPIO_EMC_33	semc.DATA[11]	ALT 0	—
GPIO_EMC_34	semc.DATA[12]	ALT 0	—
GPIO_EMC_35	semc.DATA[13]	ALT 0	—
GPIO_EMC_36	semc.DATA[14]	ALT 0	—
GPIO_EMC_37	semc.DATA[15]	ALT 0	—

Table continues on the next page...

All information provided in this document is subject to legal disclaimers.

© 2025 NXP B.V. All rights reserved.

Downloaded from Arrow.com.

Table 72. Boot through NAND...*continued*

PAD Name	IO Function	ALT	Comments
GPIO_EMC_18	semc.ADDR[9]	ALT 0	—
GPIO_EMC_19	semc.ADDR[11]	ALT 0	—
GPIO_EMC_20	semc.ADDR[12]	ALT 0	—
GPIO_EMC_22	semc.BA1	ALT 0	—
GPIO_EMC_41	semc.CSX[0]	ALT 0	—

Table 73. Boot trough NOR

PAD Name	IO Function	ALT	Comments
GPIO_EMC_00	semc.DATA[0]	ALT 0	—
GPIO_EMC_01	semc.DATA[1]	ALT 0	—
GPIO_EMC_02	semc.DATA[2]	ALT 0	—
GPIO_EMC_03	semc.DATA[3]	ALT 0	—
GPIO_EMC_04	semc.DATA[4]	ALT 0	—
GPIO_EMC_05	semc.DATA[5]	ALT 0	—
GPIO_EMC_06	semc.DATA[6]	ALT 0	—
GPIO_EMC_07	semc.DATA[7]	ALT 0	—
GPIO_EMC_30	semc.DATA[8]	ALT 0	—
GPIO_EMC_31	semc.DATA[9]	ALT 0	—
GPIO_EMC_32	semc.DATA[10]	ALT 0	—
GPIO_EMC_33	semc.DATA[11]	ALT 0	—
GPIO_EMC_34	semc.DATA[12]	ALT 0	—
GPIO_EMC_35	semc.DATA[13]	ALT 0	—
GPIO_EMC_36	semc.DATA[14]	ALT 0	—
GPIO_EMC_37	semc.DATA[15]	ALT 0	—
GPIO_EMC_09	semc.ADDR[0]	ALT 0	—
GPIO_EMC_10	semc.ADDR[1]	ALT 0	—

Table continues on the next page...

All information provided in this document is subject to legal disclaimers.

© 2025 NXP B.V. All rights reserved.

Downloaded from Arrow.com.

Table 73. Boot trough NOR...*continued*

GPIO_EMC_11	semc.ADDR[2]	ALT 0	—
GPIO_EMC_12	semc.ADDR[3]	ALT 0	—
GPIO_EMC_13	semc.ADDR[4]	ALT 0	—
GPIO_EMC_14	semc.ADDR[5]	ALT 0	—
GPIO_EMC_15	semc.ADDR[6]	ALT 0	—
GPIO_EMC_16	semc.ADDR[7]	ALT 0	—
GPIO_EMC_19	semc.ADDR[11]	ALT 0	—
GPIO_EMC_20	semc.ADDR[12]	ALT 0	—
GPIO_EMC_21	semc.BA0	ALT 0	—
GPIO_EMC_22	semc.BA1	ALT 0	—
GPIO_EMC_41	semc.CSX[0]	ALT 0	—

Table 74. Boot through FlexSPI

PAD Name	IO Function	Mux Mode	Comments
GPIO_SD_B1_00	flexspi.B_DATA[3]	ALT 1	—
GPIO_SD_B1_01	flexspi.B_DATA[2]	ALT 1	—
GPIO_SD_B1_02	flexspi.B_DATA[1]	ALT 1	—
GPIO_SD_B1_03	flexspi.B_DATA[0]	ALT 1	—
GPIO_SD_B1_04	flexspi.B_SCLK	ALT 1	—
GPIO_SD_B0_05	flexspi.B_DQS	ALT 4	—
GPIO_SD_B0_04	flexspi.B_SS0_B	ALT 4	—
GPIO_SD_B0_01	flexspi.B_SS1_B	ALT 6	—
GPIO_SD_B1_05	flexspi.A_DQS	ALT 1	—
GPIO_SD_B1_06	flexspi.A_SS0_B	ALT 1	—
GPIO_SD_B0_00	flexspi.A_SS1_B	ALT 6	—
GPIO_SD_B1_07	flexspi.A_SCLK	ALT 1	—
GPIO_SD_B1_08	flexspi.A_DATA[0]	ALT 1	—

Table continues on the next page...

All information provided in this document is subject to legal disclaimers.

© 2025 NXP B.V. All rights reserved.

Downloaded from Arrow.com.

Table 74. Boot through FlexSPI...*continued*

PAD Name	IO Function	Mux Mode	Comments
GPIO_SD_B1_09	flexspi.A_DATA[1]	ALT 1	—
GPIO_SD_B1_10	flexspi.A_DATA[2]	ALT 1	—
GPIO_SD_B1_11	flexspi.A_DATA[3]	ALT 1	—

Table 75. Boot through SD1

PAD Name	IO Function	Mux Mode	Comments
GPIO_SD_B0_00	usdhc1.CMD	ALT 0	—
GPIO_SD_B0_01	usdhc1.CLK	ALT 0	—
GPIO_SD_B0_02	usdhc1.DATA0	ALT 0	—
GPIO_SD_B0_03	usdhc1.DATA1	ALT 0	—
GPIO_SD_B0_04	usdhc1.DATA2	ALT 0	—
GPIO_SD_B0_05	usdhc1.DATA3	ALT 0	—

Table 76. Boot through SD2

PAD Name	IO Function	Mux Mode	Comments
GPIO_SD_B1_00	usdhc2.DATA3	ALT 0	—
GPIO_SD_B1_01	usdhc2.DATA2	ALT 0	—
GPIO_SD_B1_02	usdhc2.DATA1	ALT 0	—
GPIO_SD_B1_03	usdhc2.DATA0	ALT 0	—
GPIO_SD_B1_04	usdhc2.CLK	ALT 0	—
GPIO_SD_B1_05	usdhc2.CMD	ALT 0	—
GPIO_SD_B1_06	usdhc2.RESET_B	ALT 0	—
GPIO_SD_B1_08	usdhc2.DATA4	ALT 0	—
GPIO_SD_B1_09	usdhc2.DATA5	ALT 0	—
GPIO_SD_B1_10	usdhc2.DATA6	ALT 0	—
GPIO_SD_B1_11	usdhc2.DATA7	ALT 0	—

All information provided in this document is subject to legal disclaimers.

© 2025 NXP B.V. All rights reserved.

Downloaded from Arrow.com.

Table 77. Boot through SPI-1

PAD Name	IO Function	Mux Mode	Comments
GPIO_SD_B0_00	lpspi1.SCK	ALT 4	—
GPIO_SD_B0_02	lpspi1.SDO	ALT 4	—
GPIO_SD_B0_03	lpspi1.SDI	ALT 4	—
GPIO_SD_B0_01	lpspi1.PCS0	ALT 4	—

Table 78. Boot through SPI-2

PAD Name	IO Function	Mux Mode	Comments
GPIO_SD_B1_07	lpspi2.SCK	ALT 4	—
GPIO_SD_B1_08	lpspi2.SDO	ALT 4	—
GPIO_SD_B1_09	lpspi2.SDI	ALT 4	—
GPIO_SD_B1_06	lpspi2.PCS0	ALT 4	—

Table 79. Boot through SPI-4

PAD Name	IO Function	Mux Mode	Comments
GPIO_B0_03	lpspi4.SCK	ALT 3	—
GPIO_B0_02	lpspi4.SDO	ALT 3	—
GPIO_B0_01	lpspi4.SDI	ALT 3	—
GPIO_B0_00	lpspi4.PCS0	ALT 3	—

Table 80. Boot through UART1

PAD Name	IO Function	Mux Mode	Comments
GPIO_AD_B0_12	lpuart1.TX	ALT 2	—
GPIO_AD_B0_13	lpuart1.RX	ALT 2	—

6 Package information and contact assignments

This section includes the contact assignment information and mechanical package drawing.

6.1 9 x 9 mm package information

6.1.1 9 x 9 mm, 0.65 mm pitch, ball matrix

Figure 52 shows the top, bottom, and side views of the 9 x 9 mm BGA package.

All information provided in this document is subject to legal disclaimers.

© 2025 NXP B.V. All rights reserved.

Downloaded from Arrow.com.

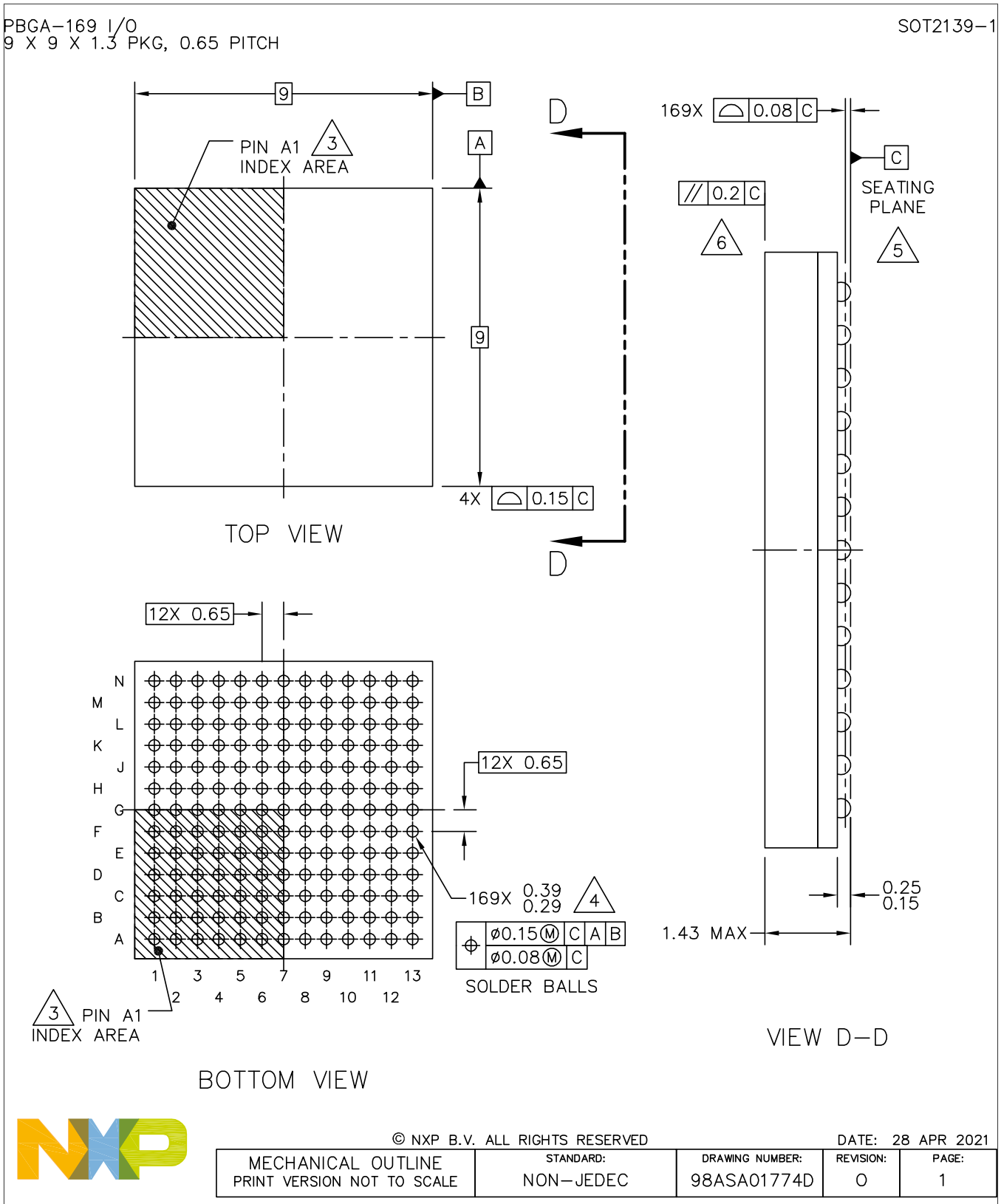

Figure 52. 9 x 9 mm BGA, case x package top, bottom, and side Views

Downloaded from Arrow.com.

6.1.2 9 x 9 mm supplies contact assignments and functional contact assignments

Table 81 shows the device connection list for ground, sense, and reference contact signals.

Table 81. 9 x 9 mm supplies contact assignment

Supply Rail Name	Ball(s) Position(s)	Remark
DCDC_IN	K1, K2	—
DCDC_IN_Q	L3	—
DCDC_GND	M1, M2	—
DCDC_LP	L1, L2	—
DCDC_PSWITCH	M3	—
DCDC_SENSE	K4	—
GPANAIO	M10	—
NGND_KEL0	L8	—
NVCC_EMC	E6, F5	—
NVCC_GPIO	G9, G8	—
NVCC_PLL	N12	—
NVCC_SD0	J5	—
NVCC_SD1	L5	—
VDDA_ADC_3P3	M12	—
VDD_HIGH_CAP	N10	—
VDD_HIGH_IN	M13	—
VDD_SNVS_CAP	L9	—
VDD_SNVS_IN	K8	—
VDD_SOC_IN	E9, F6, F7, F8, F9, G6, H6	—
VDD_USB_CAP	L7	—
VSS	A1, A13, B5, B10, E2, G7, H7, H8, K9, L11, M8, N1, N13	—

Table 82 shows an alpha-sorted list of functional contact assignments for the 9 x 9 mm package.

All information provided in this document is subject to legal disclaimers.

© 2025 NXP B.V. All rights reserved.

Downloaded from Arrow.com.

Table 82. 9 x 9 mm functional contact assignments

Ball Name	9 x 9 Ball	Power Group	Ball Type	Default Setting				Default setting on Reset	
				Default Mode	Default Function	Input/ Output	Value	Input/ Output	Value
GPIO_AD_B0_04	F11	NVCC_GPIO	Digital GPIO	ALT0	SRC.BOOT.MODE[0]	Input	100 K PD	Input	100 K PD
GPIO_AD_B0_05	H12	NVCC_GPIO	Digital GPIO	ALT0	SRC.BOOT.MODE[1]	Input	100 K PD	Input	100 K PD
GPIO_AD_B0_06	G13	NVCC_GPIO	Digital GPIO	ALT0	JTAG.MUX.TMS	Input	47 K PU	Input	47 K PU
GPIO_AD_B0_07	H13	NVCC_GPIO	Digital GPIO	ALT0	JTAG.MUX.TCK	Input	47 K PU	Input	100 K PD
GPIO_AD_B0_08	G11	NVCC_GPIO	Digital GPIO	ALT0	JTAG.MUX.MOD	Input	100 K PU	Input	100 K PD
GPIO_AD_B0_09	G12	NVCC_GPIO	Digital GPIO	ALT0	JTAG.MUX.TDI	Input	47 K PU	Input	47 K PU
GPIO_AD_B0_10	G10	NVCC_GPIO	Digital GPIO	ALT0	JTAG.MUX.TDO	Output	Keeper	Output	Keeper
GPIO_AD_B0_11	H11	NVCC_GPIO	Digital GPIO	ALT0	JTAG.MUX.TRSTB	Input	47 K PU	Input	47 K PU
GPIO_AD_B0_12	J12	NVCC_GPIO	Digital GPIO	ALT5	GPIO1.IO[12]	Input	Keeper	Input	Keeper
GPIO_AD_B0_13	J11	NVCC_GPIO	Digital GPIO	ALT5	GPIO1.IO[13]	Input	Keeper	Input	Keeper
GPIO_AD_B0_14	J13	NVCC_GPIO	Digital GPIO	ALT5	GPIO1.IO[14]	Input	Keeper	Input	Keeper
GPIO_AD_B0_15	K10	NVCC_GPIO	Digital GPIO	ALT5	GPIO1.IO[15]	Input	Keeper	Input	Keeper
GPIO_AD_B1_00	H9	NVCC_GPIO	Digital GPIO	ALT5	GPIO1.IO[16]	Input	Keeper	Input	Keeper
GPIO_AD_B1_01	K12	NVCC_GPIO	Digital GPIO	ALT5	GPIO1.IO[17]	Input	Keeper	Input	Keeper
GPIO_AD_B1_02	K11	NVCC_GPIO	Digital GPIO	ALT5	GPIO1.IO[18]	Input	Keeper	Input	Keeper
GPIO_AD_B1_03	L12	NVCC_GPIO	Digital GPIO	ALT5	GPIO1.IO[19]	Input	Keeper	Input	Keeper

Table continues on the next page...

All information provided in this document is subject to legal disclaimers.

© 2025 NXP B.V. All rights reserved.

Downloaded from Arrow.com.

Table 82. 9 x 9 mm functional contact assignments *...continued*

Ball Name	9 x 9 Ball	Power Group	Ball Type	Default Setting				Default setting on Reset	
				Default Mode	Default Function	Input/ Output	Value	Input/ Output	Value
GPIO_AD_B1_04	L13	NVCC_GPIO	Digital GPIO	ALT5	GPIO1.IO[20]	Input	Keeper	Input	Keeper
GPIO_AD_B1_05	K13	NVCC_GPIO	Digital GPIO	ALT5	GPIO1.IO[21]	Input	Keeper	Input	Keeper
GPIO_AD_B1_06	H10	NVCC_GPIO	Digital GPIO	ALT5	GPIO1.IO[22]	Input	Keeper	Input	Keeper
GPIO_AD_B1_07	J10	NVCC_GPIO	Digital GPIO	ALT5	GPIO1.IO[23]	Input	Keeper	Input	Keeper
GPIO_B0_00	D7	NVCC_GPIO	Digital GPIO	ALT5	GPIO2.IO[0]	Input	Keeper	Input	Keeper
GPIO_B0_01	D8	NVCC_GPIO	Digital GPIO	ALT5	GPIO2.IO[1]	Input	Keeper	Input	Keeper
GPIO_B0_02	E8	NVCC_GPIO	Digital GPIO	ALT5	GPIO2.IO[2]	Input	Keeper	Input	Keeper
GPIO_B0_03	E7	NVCC_GPIO	Digital GPIO	ALT5	GPIO2.IO[3]	Input	Keeper	Input	Keeper
GPIO_B0_04	C8	NVCC_GPIO	Digital GPIO	ALT5	GPIO2.IO[4]	Input	Keeper	Input	100 K PD
GPIO_B0_05	A8	NVCC_GPIO	Digital GPIO	ALT5	GPIO2.IO[5]	Input	Keeper	Input	100 K PD
GPIO_B0_06	B8	NVCC_GPIO	Digital GPIO	ALT5	GPIO2.IO[6]	Input	Keeper	Input	100 K PD
GPIO_B0_07	A9	NVCC_GPIO	Digital GPIO	ALT5	GPIO2.IO[7]	Input	Keeper	Input	100 K PD
GPIO_B0_08	A10	NVCC_GPIO	Digital GPIO	ALT5	GPIO2.IO[8]	Input	Keeper	Input	100 K PD
GPIO_B0_09	C9	NVCC_GPIO	Digital GPIO	ALT5	GPIO2.IO[9]	Input	Keeper	Input	100 K PD
GPIO_B0_10	D9	NVCC_GPIO	Digital GPIO	ALT5	GPIO2.IO[10]	Input	Keeper	Input	100 K PD
GPIO_B0_11	B9	NVCC_GPIO	Digital GPIO	ALT5	GPIO2.IO[11]	Input	Keeper	Input	100 K PD

Table continues on the next page...

All information provided in this document is subject to legal disclaimers.

© 2025 NXP B.V. All rights reserved.

Downloaded from Arrow.com.

Table 82. 9 x 9 mm functional contact assignments *...continued*

Ball Name	9 x 9 Ball	Power Group	Ball Type	Default Setting				Default setting on Reset	
				Default Mode	Default Function	Input/ Output	Value	Input/ Output	Value
GPIO_B0_12	D10	NVCC_GPIO	Digital GPIO	ALT5	GPIO2.IO[12]	Input	Keeper	Input	100 K PD
GPIO_B0_13	C10	NVCC_GPIO	Digital GPIO	ALT5	GPIO2.IO[13]	Input	Keeper	Input	100 K PD
GPIO_B0_14	C11	NVCC_GPIO	Digital GPIO	ALT5	GPIO2.IO[14]	Input	Keeper	Input	100 K PD
GPIO_B0_15	D11	NVCC_GPIO	Digital GPIO	ALT5	GPIO2.IO[15]	Input	Keeper	Input	100 K PD
GPIO_B1_00	A11	NVCC_GPIO	Digital GPIO	ALT5	GPIO2.IO[16]	Input	Keeper	Input	Keeper
GPIO_B1_01	A12	NVCC_GPIO	Digital GPIO	ALT5	GPIO2.IO[17]	Input	Keeper	Input	Keeper
GPIO_B1_02	E12	NVCC_GPIO	Digital GPIO	ALT5	GPIO2.IO[18]	Input	Keeper	Input	Keeper
GPIO_B1_03	E10	NVCC_GPIO	Digital GPIO	ALT5	GPIO2.IO[19]	Input	Keeper	Input	Keeper
GPIO_B1_04	F10	NVCC_GPIO	Digital GPIO	ALT5	GPIO2.IO[20]	Input	Keeper	Input	Keeper
GPIO_B1_05	E11	NVCC_GPIO	Digital GPIO	ALT5	GPIO2.IO[21]	Input	Keeper	Input	Keeper
GPIO_B1_06	C13	NVCC_GPIO	Digital GPIO	ALT5	GPIO2.IO[22]	Input	Keeper	Input	Keeper
GPIO_B1_07	B12	NVCC_GPIO	Digital GPIO	ALT5	GPIO2.IO[23]	Input	Keeper	Input	Keeper
GPIO_B1_08	B11	NVCC_GPIO	Digital GPIO	ALT5	GPIO2.IO[24]	Input	Keeper	Input	Keeper
GPIO_B1_09	B13	NVCC_GPIO	Digital GPIO	ALT5	GPIO2.IO[25]	Input	Keeper	Input	Keeper
GPIO_B1_10	C12	NVCC_GPIO	Digital GPIO	ALT5	GPIO2.IO[26]	Input	Keeper	Input	Keeper
GPIO_B1_11	D12	NVCC_GPIO	Digital GPIO	ALT5	GPIO2.IO[27]	Input	Keeper	Input	Keeper

Table continues on the next page...

All information provided in this document is subject to legal disclaimers.

© 2025 NXP B.V. All rights reserved.

Downloaded from Arrow.com.

Table 82. 9 x 9 mm functional contact assignments *...continued*

Ball Name	9 x 9 Ball	Power Group	Ball Type	Default Setting				Default setting on Reset	
				Default Mode	Default Function	Input/ Output	Value	Input/ Output	Value
GPIO_B1_12	F13	NVCC_GPIO	Digital GPIO	ALT5	GPIO2.IO[28]	Input	Keeper	Input	Keeper
GPIO_B1_13	F12	NVCC_GPIO	Digital GPIO	ALT5	GPIO2.IO[29]	Input	Keeper	Input	Keeper
GPIO_B1_14	E13	NVCC_GPIO	Digital GPIO	ALT5	GPIO2.IO[30]	Input	Keeper	Input	Keeper
GPIO_B1_15	D13	NVCC_GPIO	Digital GPIO	ALT5	GPIO2.IO[31]	Input	Keeper	Input	Keeper
GPIO_EMC_00	E3	NVCC_EMC	Digital GPIO	ALT5	GPIO4.IO[0]	Input	Keeper	Input	Keeper
GPIO_EMC_01	F3	NVCC_EMC	Digital GPIO	ALT5	GPIO4.IO[1]	Input	Keeper	Input	Keeper
GPIO_EMC_02	F2	NVCC_EMC	Digital GPIO	ALT5	GPIO4.IO[2]	Input	Keeper	Input	Keeper
GPIO_EMC_03[1]	F4	NVCC_EMC	Digital GPIO	ALT5	GPIO4.IO[3]	Input	Keeper	Output	Keeper
GPIO_EMC_04	H4	NVCC_EMC	Digital GPIO	ALT5	GPIO4.IO[4]	Input	Keeper	Input	Keeper
GPIO_EMC_05	E1	NVCC_EMC	Digital GPIO	ALT5	GPIO4.IO[5]	Input	Keeper	Input	Keeper
GPIO_EMC_06	G4	NVCC_EMC	Digital GPIO	ALT5	GPIO4.IO[6]	Input	Keeper	Input	Keeper
GPIO_EMC_07	G5	NVCC_EMC	Digital GPIO	ALT5	GPIO4.IO[7]	Input	Keeper	Input	Keeper
GPIO_EMC_08	H1	NVCC_EMC	Digital GPIO	ALT5	GPIO4.IO[8]	Input	Keeper	Input	Keeper
GPIO_EMC_09	B1	NVCC_EMC	Digital GPIO	ALT5	GPIO4.IO[9]	Input	Keeper	Input	Keeper
GPIO_EMC_10	G1	NVCC_EMC	Digital GPIO	ALT5	GPIO4.IO[10]	Input	Keeper	Input	Keeper
GPIO_EMC_11	G3	NVCC_EMC	Digital GPIO	ALT5	GPIO4.IO[11]	Input	Keeper	Input	Keeper

Table continues on the next page...

All information provided in this document is subject to legal disclaimers.

© 2025 NXP B.V. All rights reserved.

Downloaded from Arrow.com.

Table 82. 9 x 9 mm functional contact assignments *...continued*

Ball Name	9 x 9 Ball	Power Group	Ball Type	Default Setting				Default setting on Reset	
				Default Mode	Default Function	Input/ Output	Value	Input/ Output	Value
GPIO_EMC_12	H5	NVCC_EMC	Digital GPIO	ALT5	GPIO4.IO[12]	Input	Keeper	Input	Keeper
GPIO_EMC_13	A6	NVCC_EMC	Digital GPIO	ALT5	GPIO4.IO[13]	Input	Keeper	Input	Keeper
GPIO_EMC_14	A7	NVCC_EMC	Digital GPIO	ALT5	GPIO4.IO[14]	Input	Keeper	Input	Keeper
GPIO_EMC_15	C2	NVCC_EMC	Digital GPIO	ALT5	GPIO4.IO[15]	Input	Keeper	Input	Keeper
GPIO_EMC_16	A5	NVCC_EMC	Digital GPIO	ALT5	GPIO4.IO[16]	Input	Keeper	Input	Keeper
GPIO_EMC_17	A4	NVCC_EMC	Digital GPIO	ALT5	GPIO4.IO[17]	Input	Keeper	Input	Keeper
GPIO_EMC_18	D3	NVCC_EMC	Digital GPIO	ALT5	GPIO4.IO[18]	Input	Keeper	Input	Keeper
GPIO_EMC_19	A3	NVCC_EMC	Digital GPIO	ALT5	GPIO4.IO[19]	Input	Keeper	Input	Keeper
GPIO_EMC_20	A2	NVCC_EMC	Digital GPIO	ALT5	GPIO4.IO[20]	Input	Keeper	Input	Keeper
GPIO_EMC_21	D2	NVCC_EMC	Digital GPIO	ALT5	GPIO4.IO[21]	Input	Keeper	Input	Keeper
GPIO_EMC_22	G2	NVCC_EMC	Digital GPIO	ALT5	GPIO4.IO[22]	Input	Keeper	Input	Keeper
GPIO_EMC_23	H3	NVCC_EMC	Digital GPIO	ALT5	GPIO4.IO[23]	Input	Keeper	Input	Keeper
GPIO_EMC_24	E4	NVCC_EMC	Digital GPIO	ALT5	GPIO4.IO[24]	Input	Keeper	Input	Keeper
GPIO_EMC_25	D1	NVCC_EMC	Digital GPIO	ALT5	GPIO4.IO[25]	Input	Keeper	Input	Keeper
GPIO_EMC_26	B2	NVCC_EMC	Digital GPIO	ALT5	GPIO4.IO[26]	Input	Keeper	Input	Keeper
GPIO_EMC_27	C3	NVCC_EMC	Digital GPIO	ALT5	GPIO4.IO[27]	Input	100 K PD	Input	100 K PD

Table continues on the next page...

All information provided in this document is subject to legal disclaimers.

© 2025 NXP B.V. All rights reserved.

Downloaded from Arrow.com.

Table 82. 9 x 9 mm functional contact assignments *...continued*

Ball Name	9 x 9 Ball	Power Group	Ball Type	Default Setting				Default setting on Reset	
				Default Mode	Default Function	Input/ Output	Value	Input/ Output	Value
GPIO_EMC_28	C1	NVCC_EMC	Digital GPIO	ALT5	GPIO4.IO[28]	Input	Keeper	Input	Keeper
GPIO_EMC_29	F1	NVCC_EMC	Digital GPIO	ALT5	GPIO4.IO[29]	Input	Keeper	Input	Keeper
GPIO_EMC_30	B7	NVCC_EMC	Digital GPIO	ALT5	GPIO4.IO[30]	Input	Keeper	Input	Keeper
GPIO_EMC_31	C5	NVCC_EMC	Digital GPIO	ALT5	GPIO4.IO[31]	Input	Keeper	Input	Keeper
GPIO_EMC_32	D5	NVCC_EMC	Digital GPIO	ALT5	GPIO3.IO[18]	Input	Keeper	Input	Keeper
GPIO_EMC_33	D4	NVCC_EMC	Digital GPIO	ALT5	GPIO3.IO[19]	Input	Keeper	Input	Keeper
GPIO_EMC_34	B4	NVCC_EMC	Digital GPIO	ALT5	GPIO3.IO[20]	Input	Keeper	Input	Keeper
GPIO_EMC_35	C4	NVCC_EMC	Digital GPIO	ALT5	GPIO3.IO[21]	Input	Keeper	Input	Keeper
GPIO_EMC_36	B3	NVCC_EMC	Digital GPIO	ALT5	GPIO3.IO[22]	Input	Keeper	Input	Keeper
GPIO_EMC_37	E5	NVCC_EMC	Digital GPIO	ALT5	GPIO3.IO[23]	Input	Keeper	Input	Keeper
GPIO_EMC_38	B6	NVCC_EMC	Digital GPIO	ALT5	GPIO3.IO[24]	Input	Keeper	Input	Keeper
GPIO_EMC_39	C6	NVCC_EMC	Digital GPIO	ALT5	GPIO3.IO[25]	Input	Keeper	Input	Keeper
GPIO_EMC_40	C7	NVCC_EMC	Digital GPIO	ALT5	GPIO3.IO[26]	Input	Keeper	Input	Keeper
GPIO_EMC_41	D6	NVCC_EMC	Digital GPIO	ALT5	GPIO3.IO[27]	Input	Keeper	Input	Keeper
GPIO_SD_B0_00	H2	NVCC_SD0	Digital GPIO	ALT5	GPIO3.IO[12]	Input	Keeper	Input	Keeper
GPIO_SD_B0_01	J3	NVCC_SD0	Digital GPIO	ALT5	GPIO3.IO[13]	Input	Keeper	Input	Keeper

Table continues on the next page...

All information provided in this document is subject to legal disclaimers.

© 2025 NXP B.V. All rights reserved.

Downloaded from Arrow.com.

Table 82. 9 x 9 mm functional contact assignments *...continued*

Ball Name	9 x 9 Ball	Power Group	Ball Type	Default Setting				Default setting on Reset	
				Default Mode	Default Function	Input/ Output	Value	Input/ Output	Value
GPIO_SD_B0_02	J2	NVCC_SD0	Digital GPIO	ALT5	GPIO3.IO[14]	Input	Keeper	Input	Keeper
GPIO_SD_B0_03	K3	NVCC_SD0	Digital GPIO	ALT5	GPIO3.IO[15]	Input	Keeper	Input	Keeper
GPIO_SD_B0_04	J4	NVCC_SD0	Digital GPIO	ALT5	GPIO3.IO[16]	Input	Keeper	Input	Keeper
GPIO_SD_B0_05	J1	NVCC_SD0	Digital GPIO	ALT5	GPIO3.IO[17]	Input	Keeper	Input	Keeper
GPIO_SD_B1_00	L6	NVCC_SD1	Digital GPIO	ALT5	GPIO3.IO[0]	Input	Keeper	Input	Keeper
GPIO_SD_B1_01	M6	NVCC_SD1	Digital GPIO	ALT5	GPIO3.IO[1]	Input	Keeper	Input	Keeper
GPIO_SD_B1_02	K5	NVCC_SD1	Digital GPIO	ALT5	GPIO3.IO[2]	Input	Keeper	Input	Keeper
GPIO_SD_B1_03	N3	NVCC_SD1	Digital GPIO	ALT5	GPIO3.IO[3]	Input	Keeper	Input	Keeper
GPIO_SD_B1_04	N2	NVCC_SD1	Digital GPIO	ALT5	GPIO3.IO[4]	Input	Keeper	Input	Keeper
GPIO_SD_B1_05	M4	NVCC_SD1	Digital GPIO	ALT5	GPIO3.IO[5]	Input	Keeper	Input	Keeper
GPIO_SD_B1_06	M5	NVCC_SD1	Digital GPIO	ALT5	GPIO3.IO[6]	Input	Keeper	Input	Keeper
GPIO_SD_B1_07	L4	NVCC_SD1	Digital GPIO	ALT5	GPIO3.IO[7]	Input	Keeper	Input	Keeper
GPIO_SD_B1_08	N4	NVCC_SD1	Digital GPIO	ALT5	GPIO3.IO[8]	Input	Keeper	Input	Keeper
GPIO_SD_B1_09	K6	NVCC_SD1	Digital GPIO	ALT5	GPIO3.IO[9]	Input	Keeper	Input	Keeper
GPIO_SD_B1_10	N5	NVCC_SD1	Digital GPIO	ALT5	GPIO3.IO[01]	Input	Keeper	Input	Keeper
GPIO_SD_B1_11	N6	NVCC_SD1	Digital GPIO	ALT5	GPIO3.IO[11]	Input	Keeper	Input	Keeper

Table continues on the next page...

All information provided in this document is subject to legal disclaimers.

© 2025 NXP B.V. All rights reserved.

Downloaded from Arrow.com.

Table 82. 9 x 9 mm functional contact assignments *...continued*

Ball Name	9 x 9 Ball	Power Group	Ball Type	Default Setting				Default setting on Reset	
				Default Mode	Default Function	Input/ Output	Value	Input/ Output	Value
ONOFF	J6	VDD_SNVS_IN	Digital GPIO	ALT0	ONOFF	Input	100 K PU	Input	100 K PU
PMIC_ON_REQ	J8	VDD_SNVS_IN	Digital GPIO	ALT0	SNVS_LP.PMIC_ON_REQ	Output	100 K PU	Output	100 K PU
POR_B	K7	VDD_SNVS_IN	Digital GPIO	ALT0	SRC.POR_B	Input	100 K PU	Input	100 K PU
RTC_XTALI	M9	—	—	—	—	—	—	—	—
RTC_XTALO	N9	—	—	—	—	—	—	—	—
TEST_MODE	J7	VDD_SNVS_IN	Digital GPIO	ALT0	TCU.TEST_MODE	Input	100 K PU	Input	100 K PU
USB_OTG1_CHD_B	L10	—	—	—	—	—	—	—	—
USB_OTG1_DN	M7	—	—	—	—	—	—	—	—
USB_OTG1_DP	N7	—	—	—	—	—	—	—	—
USB_OTG1_VBUS	N8	—	—	—	—	—	—	—	—
XTALI	N11	—	—	—	—	—	—	—	—
XTALO	M11	—	—	—	—	—	—	—	—
WAKEUP	J9	VDD_SNVS_IN	Digital GPIO	ALT5	GPIO5.IO[0]	Input	100 K PU	Input	100 K PU

[1] This pin output is in a high level until the system reset is complete.

6.1.3 9 x 9 mm, 0.65 mm pitch, ball map

Table 83 shows the 9 x 9 mm, 0.65 mm pitch ball map for the i.MX RT1040.

Table 83. 9x9 mm, 0.65 mm pitch, ball map

	1	2	3	4	5	6	7	8	9	10	11	12	13	
A	VSS	GPIO_EMC_20	GPIO_EMC_19	GPIO_EMC_17	GPIO_EMC_16	GPIO_EMC_13	GPIO_EMC_14	GPIO_B0_05	GPIO_B0_07	GPIO_B0_08	GPIO_B1_00	GPIO_B1_01	VSS	A
B	GPIO_EMC_09	GPIO_EMC_26	GPIO_EMC_36	GPIO_EMC_34	VSS	GPIO_EMC_38	GPIO_EMC_30	GPIO_B0_06	GPIO_B0_11	VSS	GPIO_B1_08	GPIO_B1_07	GPIO_B1_09	B

Table continues on the next page...

All information provided in this document is subject to legal disclaimers.

© 2025 NXP B.V. All rights reserved.

Downloaded from Arrow.com.

Table 83. 9x9 mm, 0.65 mm pitch, ball map *...continued*

	1	2	3	4	5	6	7	8	9	10	11	12	13	
C	GPIO_EMC_28	GPIO_EMC_15	GPIO_EMC_27	GPIO_EMC_35	GPIO_EMC_31	GPIO_EMC_39	GPIO_EMC_40	GPIO_B0_04	GPIO_B0_09	GPIO_B0_13	GPIO_B0_14	GPIO_B1_10	GPIO_B1_06	C
D	GPIO_EMC_25	GPIO_EMC_21	GPIO_EMC_18	GPIO_EMC_33	GPIO_EMC_32	GPIO_EMC_41	GPIO_B0_00	GPIO_B0_01	GPIO_B0_10	GPIO_B0_12	GPIO_B0_15	GPIO_B1_11	GPIO_B1_15	D
E	GPIO_EMC_05	VSS	GPIO_EMC_00	GPIO_EMC_24	GPIO_EMC_37	NVCC_EMC	GPIO_B0_03	GPIO_B0_02	VDD_SOC_IN	GPIO_B1_03	GPIO_B1_05	GPIO_B1_02	GPIO_B1_14	E
F	GPIO_EMC_29	GPIO_EMC_02	GPIO_EMC_01	GPIO_EMC_03	NVCC_EMC	VDD_SOC_IN	VDD_SOC_IN	VDD_SOC_IN	VDD_SOC_IN	GPIO_B1_04	GPIO_AD_B0_04	GPIO_B1_13	GPIO_B1_12	F
G	GPIO_EMC_10	GPIO_EMC_22	GPIO_EMC_11	GPIO_EMC_06	GPIO_EMC_07	VDD_SOC_IN	VSS	NVCC_GPIO	NVCC_GPIO	GPIO_AD_B0_10	GPIO_AD_B0_08	GPIO_AD_B0_09	GPIO_AD_B0_06	G
H	GPIO_EMC_08	GPIO_SD_B0_00	GPIO_EMC_23	GPIO_EMC_04	GPIO_EMC_12	VDD_SOC_IN	VSS	VSS	GPIO_AD_B1_00	GPIO_AD_B1_06	GPIO_AD_B0_11	GPIO_AD_B0_05	GPIO_AD_B0_07	H
J	GPIO_SD_B0_05	GPIO_SD_B0_02	GPIO_SD_B0_01	GPIO_SD_B0_04	NVCC_SD0	ONOFF	TEST_MODE	PMIC_ON_REQ	WAKEUP	GPIO_AD_B1_07	GPIO_AD_B0_13	GPIO_AD_B0_12	GPIO_AD_B0_14	J
K	DCDC_IN	DCDC_IN	GPIO_SD_B0_03	DCDC_SENSE	GPIO_SD_B1_02	GPIO_SD_B1_09	POR_B	VDD_SNVS_IN	VSS	GPIO_AD_B0_15	GPIO_AD_B1_02	GPIO_AD_B1_01	GPIO_AD_B1_05	K
L	DCDC_LP	DCDC_LP	DCDC_IN_Q	GPIO_SD_B1_07	NVCC_SD1	GPIO_SD_B1_00	VDD_USB_CAP	NGND_KEL0	VDD_SNVS_CAP	USB_OTG1_CHD_B	VSS	GPIO_AD_B1_03	GPIO_AD_B1_04	L
M	DCDC_GND	DCDC_GND	DCDC_PSWITCH	GPIO_SD_B1_05	GPIO_SD_B1_06	GPIO_SD_B1_01	USB_OTG1_DN	VSS	RTC_XTALI	GPANAIO	XTALO	VDDA_ADC_3P3	VDD_HIGH_IN	M
N	VSS	GPIO_SD_B1_04	GPIO_SD_B1_03	GPIO_SD_B1_08	GPIO_SD_B1_10	GPIO_SD_B1_11	USB_OTG1_DP	USB_OTG1_VBUS	RTC_XTALO	VDD_HIGH_CAP	XTALI	NVCC_PLL	VSS	N
	1	2	3	4	5	6	7	8	9	10	11	12	13	

6.2 11 x 11 mm package information

6.2.1 11 x 11 mm, 0.8 mm pitch, ball matrix

Figure 53 shows the top, bottom, and side views of the 11 x 11 mm BGA package.

All information provided in this document is subject to legal disclaimers.

© 2025 NXP B.V. All rights reserved.

Downloaded from Arrow.com.

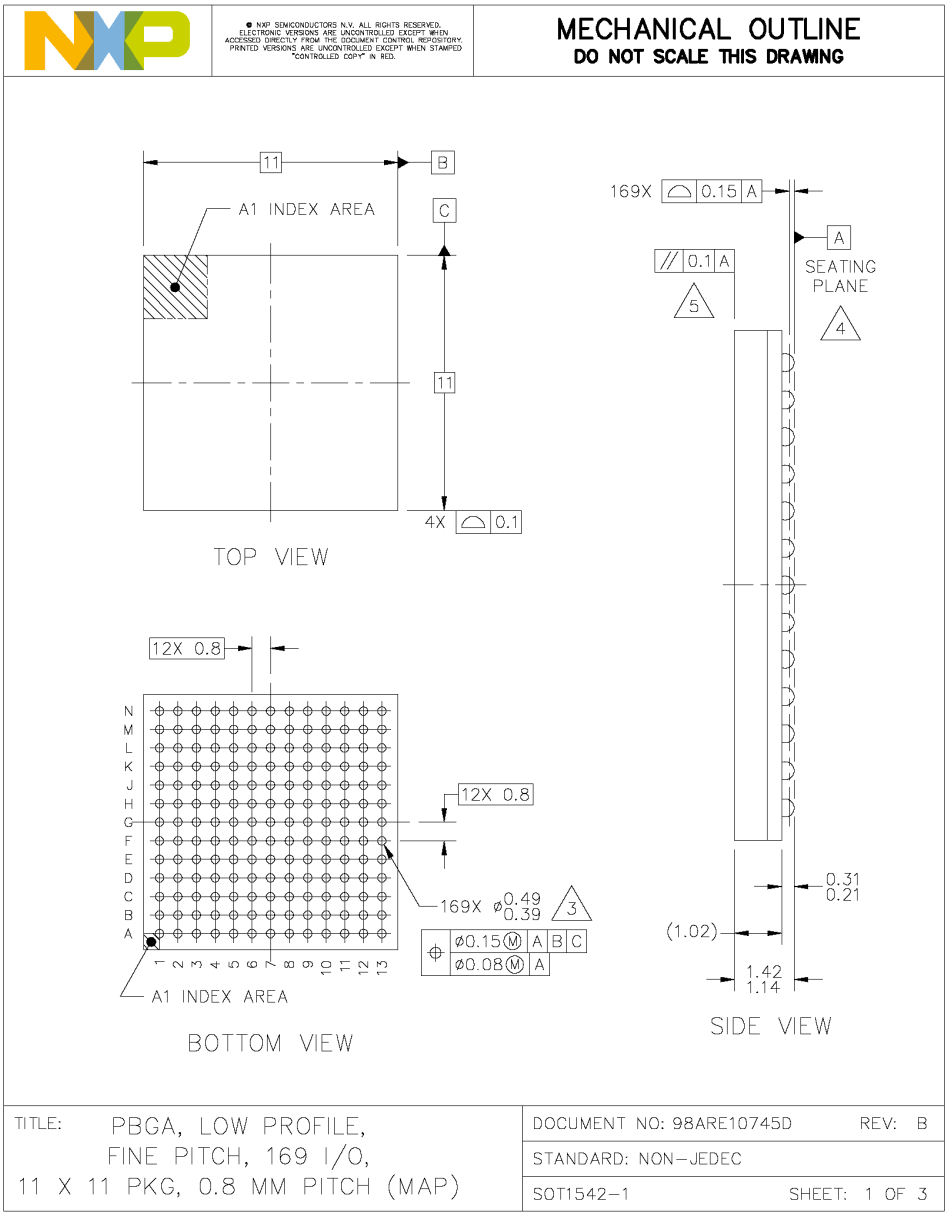

Figure 53. 11 x 11 mm BGA, case x package top, bottom, and side Views

6.2.2 11 x 11 mm supplies contact assignments and functional contact assignments

Table 84 shows the device connection list for ground, sense, and reference contact signals.

Table 84. 11 x 11 mm supplies contact assignment

Supply Rail Name	Ball(s) Position(s)	Remark
DCDC_IN	K1, K2	—

Table continues on the next page...

© 2025 NXP B.V. All rights reserved.

Downloaded from Arrow.com.

Table 84. 11 x 11 mm supplies contact assignment*...continued*

Supply Rail Name	Ball(s) Position(s)	Remark
DCDC_IN_Q	L3	—
DCDC_GND	M1, M2	—
DCDC_LP	L1, L2	—
DCDC_PSWITCH	M3	—
DCDC_SENSE	K4	—
GPANAIO	M10	—
NGND_KEL0	L8	—
NVCC_EMC	E6, F5	—
NVCC_GPIO	G9, G8	—
NVCC_PLL	N12	—
NVCC_SD0	J5	—
NVCC_SD1	L5	—
VDDA_ADC_3P3	M12	—
VDD_HIGH_CAP	N10	—
VDD_HIGH_IN	M13	—
VDD_SNVS_CAP	L9	—
VDD_SNVS_IN	K8	—
VDD_SOC_IN	E9,F6, F7, F8, F9, G6, H6	—
VDD_USB_CAP	L7	—
VSS	A1, A13, B5, B10, E4, G7, H7, H8, K9, L11, M8, N1, N13	—

Table 85 shows an alpha-sorted list of functional contact assignments for the 11 x 11 mm package.

Table 85. 11 x 11 mm functional contact assignments

Ball Name	11 x 11 Ball	Power Group	Ball Type	Default Setting				Default setting on Reset	
				Default Mode	Default Function	Input/ Output	Value	Input/ Output	Value
GPIO_AD_B0_04	F11	NVCC_GPIO	Digital GPIO	ALT0	SRC.BOOT.MODE[0]	Input	100 K PD	Input	100 K PD

Table continues on the next page...

All information provided in this document is subject to legal disclaimers.

© 2025 NXP B.V. All rights reserved.

Downloaded from Arrow.com.

Table 85. 11 x 11 mm functional contact assignments *...continued*

Ball Name	11 x 11 Ball	Power Group	Ball Type	Default Setting				Default setting on Reset	
				Default Mode	Default Function	Input/ Output	Value	Input/ Output	Value
GPIO_AD_B0_05	H12	NVCC_GPIO	Digital GPIO	ALT0	SRC.BOOT.MODE[1]	Input	100 K PD	Input	100 K PD
GPIO_AD_B0_06	G13	NVCC_GPIO	Digital GPIO	ALT0	JTAG.MUX.TMS	Input	47 K PU	Input	47 K PU
GPIO_AD_B0_07	H13	NVCC_GPIO	Digital GPIO	ALT0	JTAG.MUX.TCK	Input	47 K PU	Input	100 K PD
GPIO_AD_B0_08	G11	NVCC_GPIO	Digital GPIO	ALT0	JTAG.MUX.MOD	Input	100 K PU	Input	100 K PD
GPIO_AD_B0_09	G12	NVCC_GPIO	Digital GPIO	ALT0	JTAG.MUX.TDI	Input	47 K PU	Input	47 K PU
GPIO_AD_B0_10	G10	NVCC_GPIO	Digital GPIO	ALT0	JTAG.MUX.TDO	Output	Keeper	Output	Keeper
GPIO_AD_B0_11	H11	NVCC_GPIO	Digital GPIO	ALT0	JTAG.MUX.TRSTB	Input	47 K PU	Input	47 K PU
GPIO_AD_B0_12	J12	NVCC_GPIO	Digital GPIO	ALT5	GPIO1.IO[12]	Input	Keeper	Input	Keeper
GPIO_AD_B0_13	J11	NVCC_GPIO	Digital GPIO	ALT5	GPIO1.IO[13]	Input	Keeper	Input	Keeper
GPIO_AD_B0_14	J13	NVCC_GPIO	Digital GPIO	ALT5	GPIO1.IO[14]	Input	Keeper	Input	Keeper
GPIO_AD_B0_15	K10	NVCC_GPIO	Digital GPIO	ALT5	GPIO1.IO[15]	Input	Keeper	Input	Keeper
GPIO_AD_B1_00	H9	NVCC_GPIO	Digital GPIO	ALT5	GPIO1.IO[16]	Input	Keeper	Input	Keeper
GPIO_AD_B1_01	K12	NVCC_GPIO	Digital GPIO	ALT5	GPIO1.IO[17]	Input	Keeper	Input	Keeper
GPIO_AD_B1_02	K11	NVCC_GPIO	Digital GPIO	ALT5	GPIO1.IO[18]	Input	Keeper	Input	Keeper
GPIO_AD_B1_03	L12	NVCC_GPIO	Digital GPIO	ALT5	GPIO1.IO[19]	Input	Keeper	Input	Keeper
GPIO_AD_B1_04	L13	NVCC_GPIO	Digital GPIO	ALT5	GPIO1.IO[20]	Input	Keeper	Input	Keeper
GPIO_AD_B1_05	K13	NVCC_GPIO	Digital GPIO	ALT5	GPIO1.IO[21]	Input	Keeper	Input	Keeper
GPIO_AD_B1_06	H10	NVCC_GPIO	Digital GPIO	ALT5	GPIO1.IO[22]	Input	Keeper	Input	Keeper

Table continues on the next page...

All information provided in this document is subject to legal disclaimers.

© 2025 NXP B.V. All rights reserved.

Downloaded from Arrow.com.

Table 85. 11 x 11 mm functional contact assignments *...continued*

Ball Name	11 x 11 Ball	Power Group	Ball Type	Default Setting				Default setting on Reset	
				Default Mode	Default Function	Input/ Output	Value	Input/ Output	Value
GPIO_AD_B1_07	J10	NVCC_GPIO	Digital GPIO	ALT5	GPIO1.IO[23]	Input	Keeper	Input	Keeper
GPIO_B0_00	D7	NVCC_GPIO	Digital GPIO	ALT5	GPIO2.IO[0]	Input	Keeper	Input	Keeper
GPIO_B0_01	D8	NVCC_GPIO	Digital GPIO	ALT5	GPIO2.IO[1]	Input	Keeper	Input	Keeper
GPIO_B0_02	E8	NVCC_GPIO	Digital GPIO	ALT5	GPIO2.IO[2]	Input	Keeper	Input	Keeper
GPIO_B0_03	E7	NVCC_GPIO	Digital GPIO	ALT5	GPIO2.IO[3]	Input	Keeper	Input	Keeper
GPIO_B0_04	C8	NVCC_GPIO	Digital GPIO	ALT5	GPIO2.IO[4]	Input	Keeper	Input	100 K PD
GPIO_B0_05	A8	NVCC_GPIO	Digital GPIO	ALT5	GPIO2.IO[5]	Input	Keeper	Input	100 K PD
GPIO_B0_06	B8	NVCC_GPIO	Digital GPIO	ALT5	GPIO2.IO[6]	Input	Keeper	Input	100 K PD
GPIO_B0_07	A9	NVCC_GPIO	Digital GPIO	ALT5	GPIO2.IO[7]	Input	Keeper	Input	100 K PD
GPIO_B0_08	A10	NVCC_GPIO	Digital GPIO	ALT5	GPIO2.IO[8]	Input	Keeper	Input	100 K PD
GPIO_B0_09	C9	NVCC_GPIO	Digital GPIO	ALT5	GPIO2.IO[9]	Input	Keeper	Input	100 K PD
GPIO_B0_10	D9	NVCC_GPIO	Digital GPIO	ALT5	GPIO2.IO[10]	Input	Keeper	Input	100 K PD
GPIO_B0_11	B9	NVCC_GPIO	Digital GPIO	ALT5	GPIO2.IO[11]	Input	Keeper	Input	100 K PD
GPIO_B0_12	D10	NVCC_GPIO	Digital GPIO	ALT5	GPIO2.IO[12]	Input	Keeper	Input	100 K PD
GPIO_B0_13	C10	NVCC_GPIO	Digital GPIO	ALT5	GPIO2.IO[13]	Input	Keeper	Input	100 K PD
GPIO_B0_14	C11	NVCC_GPIO	Digital GPIO	ALT5	GPIO2.IO[14]	Input	Keeper	Input	100 K PD
GPIO_B0_15	D11	NVCC_GPIO	Digital GPIO	ALT5	GPIO2.IO[15]	Input	Keeper	Input	100 K PD
GPIO_B1_00	A11	NVCC_GPIO	Digital GPIO	ALT5	GPIO2.IO[16]	Input	Keeper	Input	Keeper

Table continues on the next page...

All information provided in this document is subject to legal disclaimers.

© 2025 NXP B.V. All rights reserved.

Downloaded from Arrow.com.

Table 85. 11 x 11 mm functional contact assignments *...continued*

Ball Name	11 x 11 Ball	Power Group	Ball Type	Default Setting				Default setting on Reset	
				Default Mode	Default Function	Input/ Output	Value	Input/ Output	Value
GPIO_B1_01	A12	NVCC_GPIO	Digital GPIO	ALT5	GPIO2.IO[17]	Input	Keeper	Input	Keeper
GPIO_B1_02	E12	NVCC_GPIO	Digital GPIO	ALT5	GPIO2.IO[18]	Input	Keeper	Input	Keeper
GPIO_B1_03	E10	NVCC_GPIO	Digital GPIO	ALT5	GPIO2.IO[19]	Input	Keeper	Input	Keeper
GPIO_B1_04	F10	NVCC_GPIO	Digital GPIO	ALT5	GPIO2.IO[20]	Input	Keeper	Input	Keeper
GPIO_B1_05	E11	NVCC_GPIO	Digital GPIO	ALT5	GPIO2.IO[21]	Input	Keeper	Input	Keeper
GPIO_B1_06	C13	NVCC_GPIO	Digital GPIO	ALT5	GPIO2.IO[22]	Input	Keeper	Input	Keeper
GPIO_B1_07	B12	NVCC_GPIO	Digital GPIO	ALT5	GPIO2.IO[23]	Input	Keeper	Input	Keeper
GPIO_B1_08	B11	NVCC_GPIO	Digital GPIO	ALT5	GPIO2.IO[24]	Input	Keeper	Input	Keeper
GPIO_B1_09	B13	NVCC_GPIO	Digital GPIO	ALT5	GPIO2.IO[25]	Input	Keeper	Input	Keeper
GPIO_B1_10	C12	NVCC_GPIO	Digital GPIO	ALT5	GPIO2.IO[26]	Input	Keeper	Input	Keeper
GPIO_B1_11	D12	NVCC_GPIO	Digital GPIO	ALT5	GPIO2.IO[27]	Input	Keeper	Input	Keeper
GPIO_B1_12	F13	NVCC_GPIO	Digital GPIO	ALT5	GPIO2.IO[28]	Input	Keeper	Input	Keeper
GPIO_B1_13	F12	NVCC_GPIO	Digital GPIO	ALT5	GPIO2.IO[29]	Input	Keeper	Input	Keeper
GPIO_B1_14	E13	NVCC_GPIO	Digital GPIO	ALT5	GPIO2.IO[30]	Input	Keeper	Input	Keeper
GPIO_B1_15	D13	NVCC_GPIO	Digital GPIO	ALT5	GPIO2.IO[31]	Input	Keeper	Input	Keeper
GPIO_EMC_00	E3	NVCC_EMC	Digital GPIO	ALT5	GPIO4.IO[0]	Input	Keeper	Input	Keeper
GPIO_EMC_01	F3	NVCC_EMC	Digital GPIO	ALT5	GPIO4.IO[1]	Input	Keeper	Input	Keeper
GPIO_EMC_02	F2	NVCC_EMC	Digital GPIO	ALT5	GPIO4.IO[2]	Input	Keeper	Input	Keeper

Table continues on the next page...

All information provided in this document is subject to legal disclaimers.

© 2025 NXP B.V. All rights reserved.

Downloaded from Arrow.com.

Table 85. 11 x 11 mm functional contact assignments *...continued*

Ball Name	11 x 11 Ball	Power Group	Ball Type	Default Setting				Default setting on Reset	
				Default Mode	Default Function	Input/ Output	Value	Input/ Output	Value
GPIO_EMC_03[1]	F4	NVCC_EMC	Digital GPIO	ALT5	GPIO4.IO[3]	Input	Keeper	Output	Keeper
GPIO_EMC_04	H4	NVCC_EMC	Digital GPIO	ALT5	GPIO4.IO[4]	Input	Keeper	Input	Keeper
GPIO_EMC_05	G3	NVCC_EMC	Digital GPIO	ALT5	GPIO4.IO[5]	Input	Keeper	Input	Keeper
GPIO_EMC_06	G4	NVCC_EMC	Digital GPIO	ALT5	GPIO4.IO[6]	Input	Keeper	Input	Keeper
GPIO_EMC_07	G5	NVCC_EMC	Digital GPIO	ALT5	GPIO4.IO[7]	Input	Keeper	Input	Keeper
GPIO_EMC_08	H1	NVCC_EMC	Digital GPIO	ALT5	GPIO4.IO[8]	Input	Keeper	Input	Keeper
GPIO_EMC_09	C1	NVCC_EMC	Digital GPIO	ALT5	GPIO4.IO[9]	Input	Keeper	Input	Keeper
GPIO_EMC_10	G1	NVCC_EMC	Digital GPIO	ALT5	GPIO4.IO[10]	Input	Keeper	Input	Keeper
GPIO_EMC_11	G2	NVCC_EMC	Digital GPIO	ALT5	GPIO4.IO[11]	Input	Keeper	Input	Keeper
GPIO_EMC_12	H5	NVCC_EMC	Digital GPIO	ALT5	GPIO4.IO[12]	Input	Keeper	Input	Keeper
GPIO_EMC_13	A6	NVCC_EMC	Digital GPIO	ALT5	GPIO4.IO[13]	Input	Keeper	Input	Keeper
GPIO_EMC_14	A7	NVCC_EMC	Digital GPIO	ALT5	GPIO4.IO[14]	Input	Keeper	Input	Keeper
GPIO_EMC_15	C2	NVCC_EMC	Digital GPIO	ALT5	GPIO4.IO[15]	Input	Keeper	Input	Keeper
GPIO_EMC_16	A5	NVCC_EMC	Digital GPIO	ALT5	GPIO4.IO[16]	Input	Keeper	Input	Keeper
GPIO_EMC_17	A4	NVCC_EMC	Digital GPIO	ALT5	GPIO4.IO[17]	Input	Keeper	Input	Keeper
GPIO_EMC_18	D3	NVCC_EMC	Digital GPIO	ALT5	GPIO4.IO[18]	Input	Keeper	Input	Keeper
GPIO_EMC_19	A3	NVCC_EMC	Digital GPIO	ALT5	GPIO4.IO[19]	Input	Keeper	Input	Keeper
GPIO_EMC_20	A2	NVCC_EMC	Digital GPIO	ALT5	GPIO4.IO[20]	Input	Keeper	Input	Keeper

Table continues on the next page...

All information provided in this document is subject to legal disclaimers.

© 2025 NXP B.V. All rights reserved.

Downloaded from Arrow.com.

Table 85. 11 x 11 mm functional contact assignments *...continued*

Ball Name	11 x 11 Ball	Power Group	Ball Type	Default Setting				Default setting on Reset	
				Default Mode	Default Function	Input/ Output	Value	Input/ Output	Value
GPIO_EMC_21	E2	NVCC_EMC	Digital GPIO	ALT5	GPIO4.IO[21]	Input	Keeper	Input	Keeper
GPIO_EMC_22	F1	NVCC_EMC	Digital GPIO	ALT5	GPIO4.IO[22]	Input	Keeper	Input	Keeper
GPIO_EMC_23	H2	NVCC_EMC	Digital GPIO	ALT5	GPIO4.IO[23]	Input	Keeper	Input	Keeper
GPIO_EMC_24	D2	NVCC_EMC	Digital GPIO	ALT5	GPIO4.IO[24]	Input	Keeper	Input	Keeper
GPIO_EMC_25	D1	NVCC_EMC	Digital GPIO	ALT5	GPIO4.IO[25]	Input	Keeper	Input	Keeper
GPIO_EMC_26	B2	NVCC_EMC	Digital GPIO	ALT5	GPIO4.IO[26]	Input	Keeper	Input	Keeper
GPIO_EMC_27	C3	NVCC_EMC	Digital GPIO	ALT5	GPIO4.IO[27]	Input	100 K PD	Input	100 K PD
GPIO_EMC_28	B1	NVCC_EMC	Digital GPIO	ALT5	GPIO4.IO[28]	Input	Keeper	Input	Keeper
GPIO_EMC_29	E1	NVCC_EMC	Digital GPIO	ALT5	GPIO4.IO[29]	Input	Keeper	Input	Keeper
GPIO_EMC_30	B7	NVCC_EMC	Digital GPIO	ALT5	GPIO4.IO[30]	Input	Keeper	Input	Keeper
GPIO_EMC_31	C5	NVCC_EMC	Digital GPIO	ALT5	GPIO4.IO[31]	Input	Keeper	Input	Keeper
GPIO_EMC_32	D5	NVCC_EMC	Digital GPIO	ALT5	GPIO3.IO[18]	Input	Keeper	Input	Keeper
GPIO_EMC_33	D4	NVCC_EMC	Digital GPIO	ALT5	GPIO3.IO[19]	Input	Keeper	Input	Keeper
GPIO_EMC_34	B4	NVCC_EMC	Digital GPIO	ALT5	GPIO3.IO[20]	Input	Keeper	Input	Keeper
GPIO_EMC_35	C4	NVCC_EMC	Digital GPIO	ALT5	GPIO3.IO[21]	Input	Keeper	Input	Keeper
GPIO_EMC_36	B3	NVCC_EMC	Digital GPIO	ALT5	GPIO3.IO[22]	Input	Keeper	Input	Keeper
GPIO_EMC_37	E5	NVCC_EMC	Digital GPIO	ALT5	GPIO3.IO[23]	Input	Keeper	Input	Keeper
GPIO_EMC_38	B6	NVCC_EMC	Digital GPIO	ALT5	GPIO3.IO[24]	Input	Keeper	Input	Keeper

Table continues on the next page...

© 2025 NXP B.V. All rights reserved.

Downloaded from Arrow.com.

Table 85. 11 x 11 mm functional contact assignments *...continued*

Ball Name	11 x 11 Ball	Power Group	Ball Type	Default Setting				Default setting on Reset	
				Default Mode	Default Function	Input/ Output	Value	Input/ Output	Value
GPIO_EMC_39	C6	NVCC_EMC	Digital GPIO	ALT5	GPIO3.IO[25]	Input	Keeper	Input	Keeper
GPIO_EMC_40	C7	NVCC_EMC	Digital GPIO	ALT5	GPIO3.IO[26]	Input	Keeper	Input	Keeper
GPIO_EMC_41	D6	NVCC_EMC	Digital GPIO	ALT5	GPIO3.IO[27]	Input	Keeper	Input	Keeper
GPIO_SD_B0_00	H3	NVCC_SD0	Digital GPIO	ALT5	GPIO3.IO[12]	Input	Keeper	Input	Keeper
GPIO_SD_B0_01	K3	NVCC_SD0	Digital GPIO	ALT5	GPIO3.IO[13]	Input	Keeper	Input	Keeper
GPIO_SD_B0_02	J3	NVCC_SD0	Digital GPIO	ALT5	GPIO3.IO[14]	Input	Keeper	Input	Keeper
GPIO_SD_B0_03	J2	NVCC_SD0	Digital GPIO	ALT5	GPIO3.IO[15]	Input	Keeper	Input	Keeper
GPIO_SD_B0_04	J4	NVCC_SD0	Digital GPIO	ALT5	GPIO3.IO[16]	Input	Keeper	Input	Keeper
GPIO_SD_B0_05	J1	NVCC_SD0	Digital GPIO	ALT5	GPIO3.IO[17]	Input	Keeper	Input	Keeper
GPIO_SD_B1_00	L6	NVCC_SD1	Digital GPIO	ALT5	GPIO3.IO[0]	Input	Keeper	Input	Keeper
GPIO_SD_B1_01	M6	NVCC_SD1	Digital GPIO	ALT5	GPIO3.IO[1]	Input	Keeper	Input	Keeper
GPIO_SD_B1_02	K5	NVCC_SD1	Digital GPIO	ALT5	GPIO3.IO[2]	Input	Keeper	Input	Keeper
GPIO_SD_B1_03	N3	NVCC_SD1	Digital GPIO	ALT5	GPIO3.IO[3]	Input	Keeper	Input	Keeper
GPIO_SD_B1_04	N2	NVCC_SD1	Digital GPIO	ALT5	GPIO3.IO[4]	Input	Keeper	Input	Keeper
GPIO_SD_B1_05	M4	NVCC_SD1	Digital GPIO	ALT5	GPIO3.IO[5]	Input	Keeper	Input	Keeper
GPIO_SD_B1_06	M5	NVCC_SD1	Digital GPIO	ALT5	GPIO3.IO[6]	Input	Keeper	Input	Keeper
GPIO_SD_B1_07	L4	NVCC_SD1	Digital GPIO	ALT5	GPIO3.IO[7]	Input	Keeper	Input	Keeper
GPIO_SD_B1_08	N4	NVCC_SD1	Digital GPIO	ALT5	GPIO3.IO[8]	Input	Keeper	Input	Keeper

Table continues on the next page...

All information provided in this document is subject to legal disclaimers.

© 2025 NXP B.V. All rights reserved.

Downloaded from Arrow.com.

Table 85. 11 x 11 mm functional contact assignments *...continued*

Ball Name	11 x 11 Ball	Power Group	Ball Type	Default Setting				Default setting on Reset	
				Default Mode	Default Function	Input/ Output	Value	Input/ Output	Value
GPIO_SD_B1_09	K6	NVCC_SD1	Digital GPIO	ALT5	GPIO3.IO[9]	Input	Keeper	Input	Keeper
GPIO_SD_B1_10	N5	NVCC_SD1	Digital GPIO	ALT5	GPIO3.IO[01]	Input	Keeper	Input	Keeper
GPIO_SD_B1_11	N6	NVCC_SD1	Digital GPIO	ALT5	GPIO3.IO[11]	Input	Keeper	Input	Keeper
ONOFF	J6	VDD_SNVS_IN	Digital GPIO	ALT0	ONOFF	Input	100 K PU	Input	100 K PU
PMIC_ON_REQ	J8	VDD_SNVS_IN	Digital GPIO	ALT0	SNVS_LP.PMIC_ON_REQ	Output	100 K PU	Output	100 K PU
POR_B	K7	VDD_SNVS_IN	Digital GPIO	ALT0	SRC.POR_B	Input	100 K PU	Input	100 K PU
RTC_XTALI	M9	—	—	—	—	—	—	—	—
RTC_XTALO	N9	—	—	—	—	—	—	—	—
TEST_MODE	J7	VDD_SNVS_IN	Digital GPIO	ALT0	TCU.TEST_MODE	Input	100 K PU	Input	100 K PU
USB_OTG1_CHD_B	L10	—	—	—	—	—	—	—	—
USB_OTG1_DN	M7	—	—	—	—	—	—	—	—
USB_OTG1_DP	N7	—	—	—	—	—	—	—	—
USB_OTG1_VBUS	N8	—	—	—	—	—	—	—	—
XTALI	N11	—	—	—	—	—	—	—	—
XTALO	M11	—	—	—	—	—	—	—	—
WAKEUP	J9	VDD_SNVS_IN	Digital GPIO	ALT5	GPIO5.IO[0]	Input	100 K PU	Input	100 K PU

[1] This pin output is in a high level until the system reset is complete.

6.2.3 11 x 11 mm, 0.8 mm pitch, ball map

Table 86 shows the 11 x 11 mm, 0.8 mm pitch ball map for the i.MX RT1040.

Table 86. 11x11 mm, 0.8 mm pitch, ball map

	1	2	3	4	5	6	7	8	9	10	11	12	13	
A	VSS	GPIO_EMC_20	GPIO_EMC_19	GPIO_EMC_17	GPIO_EMC_16	GPIO_EMC_13	GPIO_EMC_14	GPIO_B0_05	GPIO_B0_07	GPIO_B0_08	GPIO_B1_00	GPIO_B1_01	VSS	A

Table continues on the next page...

All information provided in this document is subject to legal disclaimers.

© 2025 NXP B.V. All rights reserved.

Downloaded from Arrow.com.

Table 86. 11x11 mm, 0.8 mm pitch, ball map *...continued*

	1	2	3	4	5	6	7	8	9	10	11	12	13	
B	GPIO_EMC_28	GPIO_EMC_26	GPIO_EMC_36	GPIO_EMC_34	VSS	GPIO_EMC_38	GPIO_EMC_30	GPIO_B0_06	GPIO_B0_11	VSS	GPIO_B1_08	GPIO_B1_07	GPIO_B1_09	**B**
C	GPIO_EMC_09	GPIO_EMC_15	GPIO_EMC_27	GPIO_EMC_35	GPIO_EMC_31	GPIO_EMC_39	GPIO_EMC_40	GPIO_B0_04	GPIO_B0_09	GPIO_B0_13	GPIO_B0_14	GPIO_B1_10	GPIO_B1_06	**C**
D	GPIO_EMC_25	GPIO_EMC_24	GPIO_EMC_18	GPIO_EMC_33	GPIO_EMC_32	GPIO_EMC_41	GPIO_B0_00	GPIO_B0_01	GPIO_B0_10	GPIO_B0_12	GPIO_B0_15	GPIO_B1_11	GPIO_B1_15	**D**
E	GPIO_EMC_29	GPIO_EMC_21	GPIO_EMC_00	VSS	GPIO_EMC_37	NVCC_EMC	GPIO_B0_03	GPIO_B0_02	VDD_SOC_IN	GPIO_B1_03	GPIO_B1_05	GPIO_B1_02	GPIO_B1_14	**E**
F	GPIO_EMC_22	GPIO_EMC_02	GPIO_EMC_01	GPIO_EMC_03	NVCC_EMC	VDD_SOC_IN	VDD_SOC_IN	VDD_SOC_IN	VDD_SOC_IN	GPIO_B1_04	GPIO_AD_B0_04	GPIO_B1_13	GPIO_B1_12	**F**
G	GPIO_EMC_10	GPIO_EMC_11	GPIO_EMC_05	GPIO_EMC_06	GPIO_EMC_07	VDD_SOC_IN	VSS	NVCC_GPIO	NVCC_GPIO	GPIO_AD_B0_10	GPIO_AD_B0_08	GPIO_AD_B0_09	GPIO_AD_B0_06	**G**
H	GPIO_EMC_08	GPIO_EMC_23	GPIO_SD_B0_00	GPIO_EMC_04	GPIO_EMC_12	VDD_SOC_IN	VSS	VSS	GPIO_AD_B1_00	GPIO_AD_B1_06	GPIO_AD_B0_11	GPIO_AD_B0_05	GPIO_AD_B0_07	**H**
J	GPIO_SD_B0_05	GPIO_SD_B0_03	GPIO_SD_B0_02	GPIO_SD_B0_04	NVCC_SD0	ONOFF	TEST_MODE	PMIC_ON_REQ	WAKEUP	GPIO_AD_B1_07	GPIO_AD_B0_13	GPIO_AD_B0_12	GPIO_AD_B0_14	**J**
K	DCDC_IN	DCDC_IN	GPIO_SD_B0_01	DCDC_SENSE	GPIO_SD_B1_02	GPIO_SD_B1_09	POR_B	VDD_SNVS_IN	VSS	GPIO_AD_B0_15	GPIO_AD_B1_02	GPIO_AD_B1_01	GPIO_AD_B1_05	**K**
L	DCDC_LP	DCDC_LP	DCDC_IN_Q	GPIO_SD_B1_07	NVCC_SD1	GPIO_SD_B1_00	VDD_USB_CAP	NGND_KEL0	VDD_SNVS_CAP	USB_OTG1_CHD_B	VSS	GPIO_AD_B1_03	GPIO_AD_B1_04	**L**
M	DCDC_GND	DCDC_GND	DCDC_PSWITCH	GPIO_SD_B1_05	GPIO_SD_B1_06	GPIO_SD_B1_01	USB_OTG1_DN	VSS	RTC_XTALI	GPANAIO	XTALO	VDDA_ADC_3P3	VDD_HIGH_IN	**M**
N	VSS	GPIO_SD_B1_04	GPIO_SD_B1_03	GPIO_SD_B1_08	GPIO_SD_B1_10	GPIO_SD_B1_11	USB_OTG1_DP	USB_OTG1_VBUS	RTC_XTALO	VDD_HIGH_CAP	XTALI	NVCC_PLL	VSS	**N**
	1	**2**	**3**	**4**	**5**	**6**	**7**	**8**	**9**	**10**	**11**	**12**	**13**	

6.3 7 x 7 mm package information

All information provided in this document is subject to legal disclaimers.

© 2025 NXP B.V. All rights reserved.

Downloaded from Arrow.com.

6.3.1 7 x 7 mm, 0.5 mm pitch, ball matrix

Figure 54 shows the top, bottom, and side views of the 7 x 7 mm BGA package.

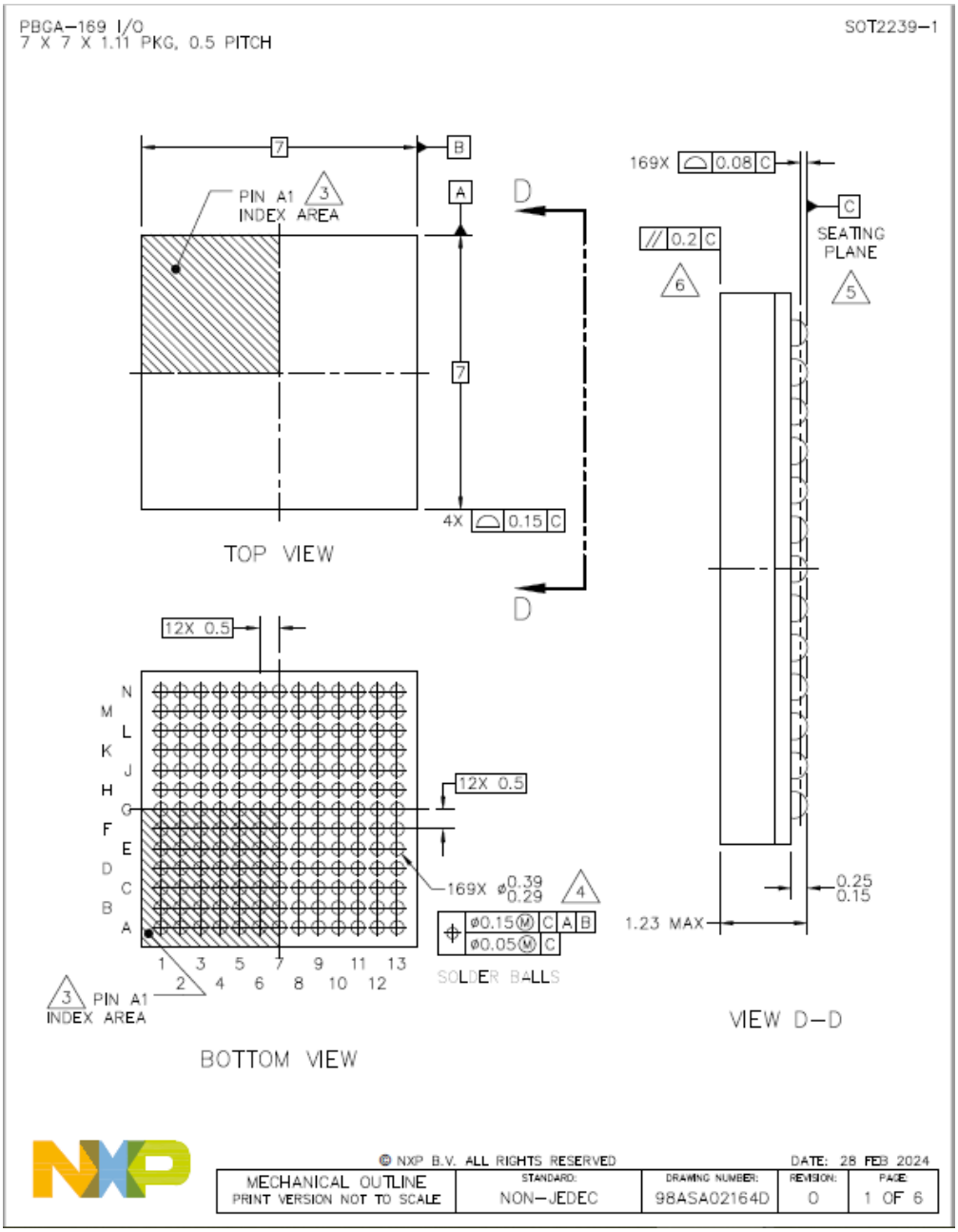

Figure 54. 7 x 7 mm BGA, case x package top, bottom, and side views

6.3.2 7 x 7 mm supplies contact assignments and functional contact assignments

Table 87 shows the device connection list for ground, sense, and reference contact signals.

All information provided in this document is subject to legal disclaimers.

© 2025 NXP B.V. All rights reserved.

Downloaded from Arrow.com.

Table 87. 7 x 7 mm supplies contact assignment

Supply Rail Name	Ball(s) Position(s)	Remark
DCDC_GND	M3, N3	-
DCDC_IN	L1, L2	-
DCDC_IN_Q	N2	-
DCDC_LP	M1, M2	-
DCDC_PSWITCH	N4	-
NGND_KEL0	K9	-
NVCC_EMC	F5, G5	-
NVCC_GPIO	G8, H8	-
NVCC_PLL	N11	-
NVCC_SD0	J5	-
NVCC_SD1	J6	-
VDD_HIGH_CAP	N10	-
VDD_HIGH_IN	M11	-
VDD_SNVS_CAP	K10	-
VDD_SNVS_IN	K7	-
VDD_SOC_IN	E5, E6, E7, E8, F6, F7, F8	-
VDD_USB_CAP	L8	-
VDDA_ADC_3P3	L12	-
VSS	A1, A13, C7, D7, G6, G7, H5, H6, H7,J1, J8, M12, N1, N13	-

Table 88 shows an alpha-sorted list of functional contact assignments for the 7 x 7 mm package.

Table 88. 7 x 7 mm functional contact assignments

Ball Name	7 x 7 Ball	Power Group	Ball Type	Default Setting				Default setting on Reset	
				Default Mode	Default Function	Input/ Output	Value	Input/ Output	Value
GPIO_AD_B0_04	F9	NVCC_GPIO	Digital GPIO	BOOT_MODE[0]	ALT0	Input	100K PD	Input	100K PD
GPIO_AD_B0_05	H13	NVCC_GPIO	Digital GPIO	BOOT_MODE[1]	ALT0	Input	100K PD	Input	100K PD
GPIO_AD_B0_06	G12	NVCC_GPIO	Digital GPIO	JTAG.TMS	ALT0	Input	47K PU	Input	47K PU
GPIO_AD_B0_07	G9	NVCC_GPIO	Digital GPIO	JTAG.TCK	ALT0	Input	100K PD	Input	100K PD

Table continues on the next page...

All information provided in this document is subject to legal disclaimers.

© 2025 NXP B.V. All rights reserved.

Downloaded from Arrow.com.

Table 88. 7 x 7 mm functional contact assignments*...continued*

Ball Name	7 x 7 Ball	Power Group	Ball Type	Default Setting				Default setting on Reset	
				Default Mode	Default Function	Input/ Output	Value	Input/ Output	Value
GPIO_AD_B0_08	G10	NVCC_GPIO	Digital GPIO	JTAG.MOD	ALT0	Input	100K PD	Input	100K PD
GPIO_AD_B0_09	G13	NVCC_GPIO	Digital GPIO	JTAG.TDI	ALT0	Input	47K PU	Input	47K PU
GPIO_AD_B0_10	H9	NVCC_GPIO	Digital GPIO	JTAG.TDO	ALT0	Output	Keeper	Output	Keeper
GPIO_AD_B0_11	G11	NVCC_GPIO	Digital GPIO	JTAG.TRSTB	ALT0	Input	47K PU	Input	47K PU
GPIO_AD_B0_12	K13	NVCC_GPIO	Digital GPIO	GPIO1.IO[12]	ALT5	Input	Keeper	Input	Keeper
GPIO_AD_B0_13	K12	NVCC_GPIO	Digital GPIO	GPIO1.IO[13]	ALT5	Input	Keeper	Input	Keeper
GPIO_AD_B1_03	M13	NVCC_GPIO	Digital GPIO	GPIO1.IO[19]	ALT5	Input	Keeper	Input	Keeper
GPIO_AD_B1_04	K11	NVCC_GPIO	Digital GPIO	GPIO1.IO[20]	ALT5	Input	Keeper	Input	Keeper
GPIO_AD_B1_05	J10	NVCC_GPIO	Digital GPIO	GPIO1.IO[21]	ALT5	Input	Keeper	Input	Keeper
GPIO_AD_B1_06	J11	NVCC_GPIO	Digital GPIO	GPIO1.IO[22]	ALT5	Input	Keeper	Input	Keeper
GPIO_AD_B1_07	L11	NVCC_GPIO	Digital GPIO	GPIO1.IO[23]	ALT5	Input	Keeper	Input	Keeper
GPIO_AD_B1_08	H12	NVCC_GPIO	Digital GPIO	GPIO1.IO[24]	ALT5	Input	Keeper	Input	Keeper
GPIO_AD_B1_09	N12	NVCC_GPIO	Digital GPIO	GPIO1.IO[25]	ALT5	Input	Keeper	Input	Keeper
GPIO_AD_B1_10	L13	NVCC_GPIO	Digital GPIO	GPIO1.IO[26]	ALT5	Input	Keeper	Input	Keeper
GPIO_AD_B1_11	J12	NVCC_GPIO	Digital GPIO	GPIO1.IO[27]	ALT5	Input	Keeper	Input	Keeper
GPIO_AD_B1_12	J9	NVCC_GPIO	Digital GPIO	GPIO1.IO[28]	ALT5	Input	Keeper	Input	Keeper
GPIO_AD_B1_13	H11	NVCC_GPIO	Digital GPIO	GPIO1.IO[29]	ALT5	Input	Keeper	Input	Keeper
GPIO_AD_B1_14	H10	NVCC_GPIO	Digital GPIO	GPIO1.IO[30]	ALT5	Input	Keeper	Input	Keeper

Table continues on the next page...

All information provided in this document is subject to legal disclaimers.

© 2025 NXP B.V. All rights reserved.

Downloaded from Arrow.com.

Table 88. 7 x 7 mm functional contact assignments*...continued*

Ball Name	7 x 7 Ball	Power Group	Ball Type	Default Setting				Default setting on Reset	
				Default Mode	Default Function	Input/ Output	Value	Input/ Output	Value
GPIO_AD_B1_15	J13	NVCC_GPIO	Digital GPIO	GPIO1.IO[31]	ALT5	Input	Keeper	Input	Keeper
GPIO_B0_00	C8	NVCC_GPIO	Digital GPIO	GPIO2.IO[0]	ALT5	Input	Keeper	Input	Keeper
GPIO_B0_01	C9	NVCC_GPIO	Digital GPIO	GPIO2.IO[1]	ALT5	Input	Keeper	Input	Keeper
GPIO_B0_02	D10	NVCC_GPIO	Digital GPIO	GPIO2.IO[2]	ALT5	Input	Keeper	Input	Keeper
GPIO_B0_03	D9	NVCC_GPIO	Digital GPIO	GPIO2.IO[3]	ALT5	Input	Keeper	Input	Keeper
GPIO_B0_04	D8	NVCC_GPIO	Digital GPIO	GPIO2.IO[4]	ALT5	Input	Keeper	Input	100K PD
GPIO_B0_05	A8	NVCC_GPIO	Digital GPIO	GPIO2.IO[5]	ALT5	Input	Keeper	Input	100K PD
GPIO_B0_06	B8	NVCC_GPIO	Digital GPIO	GPIO2.IO[6]	ALT5	Input	Keeper	Input	100K PD
GPIO_B0_07	A9	NVCC_GPIO	Digital GPIO	GPIO2.IO[7]	ALT5	Input	Keeper	Input	100K PD
GPIO_B0_08	B9	NVCC_GPIO	Digital GPIO	GPIO2.IO[8]	ALT5	Input	Keeper	Input	100K PD
GPIO_B0_09	B10	NVCC_GPIO	Digital GPIO	GPIO2.IO[9]	ALT5	Input	Keeper	Input	100K PD
GPIO_B0_10	C10	NVCC_GPIO	Digital GPIO	GPIO2.IO[10]	ALT5	Input	Keeper	Input	100K PD
GPIO_B0_11	A10	NVCC_GPIO	Digital GPIO	GPIO2.IO[11]	ALT5	Input	Keeper	Input	100K PD
GPIO_B0_12	B11	NVCC_GPIO	Digital GPIO	GPIO2.IO[12]	ALT5	Input	Keeper	Input	100K PD
GPIO_B0_13	E10	NVCC_GPIO	Digital GPIO	GPIO2.IO[13]	ALT5	Input	Keeper	Input	100K PD
GPIO_B0_14	E9	NVCC_GPIO	Digital GPIO	GPIO2.IO[14]	ALT5	Input	Keeper	Input	100K PD
GPIO_B0_15	E11	NVCC_GPIO	Digital GPIO	GPIO2.IO[15]	ALT5	Input	Keeper	Input	100K PD
GPIO_B1_00	A11	NVCC_GPIO	Digital GPIO	GPIO2.IO[16]	ALT5	Input	Keeper	Input	Keeper

Table continues on the next page...

All information provided in this document is subject to legal disclaimers.

© 2025 NXP B.V. All rights reserved.

Downloaded from Arrow.com.

Table 88. 7 x 7 mm functional contact assignments*...continued*

Ball Name	7 x 7 Ball	Power Group	Ball Type	Default Setting				Default setting on Reset	
				Default Mode	Default Function	Input/ Output	Value	Input/ Output	Value
GPIO_B1_01	B12	NVCC_GPIO	Digital GPIO	GPIO2.IO[17]	ALT5	Input	Keeper	Input	Keeper
GPIO_B1_02	F10	NVCC_GPIO	Digital GPIO	GPIO2.IO[18]	ALT5	Input	Keeper	Input	Keeper
GPIO_B1_03	C11	NVCC_GPIO	Digital GPIO	GPIO2.IO[19]	ALT5	Input	Keeper	Input	Keeper
GPIO_B1_04	F11	NVCC_GPIO	Digital GPIO	GPIO2.IO[20]	ALT5	Input	Keeper	Input	Keeper
GPIO_B1_05	D11	NVCC_GPIO	Digital GPIO	GPIO2.IO[21]	ALT5	Input	Keeper	Input	Keeper
GPIO_B1_06	C13	NVCC_GPIO	Digital GPIO	GPIO2.IO[22]	ALT5	Input	Keeper	Input	Keeper
GPIO_B1_07	C12	NVCC_GPIO	Digital GPIO	GPIO2.IO[23]	ALT5	Input	Keeper	Input	Keeper
GPIO_B1_08	A12	NVCC_GPIO	Digital GPIO	GPIO2.IO[24]	ALT5	Input	Keeper	Input	Keeper
GPIO_B1_09	B13	NVCC_GPIO	Digital GPIO	GPIO2.IO[25]	ALT5	Input	Keeper	Input	Keeper
GPIO_B1_10	D12	NVCC_GPIO	Digital GPIO	GPIO2.IO[26]	ALT5	Input	Keeper	Input	Keeper
GPIO_B1_11	E12	NVCC_GPIO	Digital GPIO	GPIO2.IO[27]	ALT5	Input	Keeper	Input	Keeper
GPIO_B1_12	F12	NVCC_GPIO	Digital GPIO	GPIO2.IO[28]	ALT5	Input	Keeper	Input	Keeper
GPIO_B1_13	F13	NVCC_GPIO	Digital GPIO	GPIO2.IO[29]	ALT5	Input	Keeper	Input	Keeper
GPIO_B1_14	E13	NVCC_GPIO	Digital GPIO	GPIO2.IO[30]	ALT5	Input	Keeper	Input	Keeper
GPIO_B1_15	D13	NVCC_GPIO	Digital GPIO	GPIO2.IO[31]	ALT5	Input	Keeper	Input	Keeper
GPIO_EMC_00	D4	NVCC_EMC	Digital GPIO	GPIO4.IO[0]	ALT5	Input	Keeper	Input	Keeper
GPIO_EMC_01	E3	NVCC_EMC	Digital GPIO	GPIO4.IO[1]	ALT5	Input	Keeper	Input	Keeper
GPIO_EMC_02	E4	NVCC_EMC	Digital GPIO	GPIO4.IO[2]	ALT5	Input	Keeper	Input	Keeper

Table continues on the next page...

All information provided in this document is subject to legal disclaimers.

© 2025 NXP B.V. All rights reserved.

Downloaded from Arrow.com.

Table 88. 7 x 7 mm functional contact assignments*...continued*

Ball Name	7 x 7 Ball	Power Group	Ball Type	Default Setting				Default setting on Reset	
				Default Mode	Default Function	Input/ Output	Value	Input/ Output	Value
GPIO_EMC_03[1]	F4	NVCC_EMC	Digital GPIO	GPIO4.IO[3]	ALT5	Input	Keeper	Output	Keeper
GPIO_EMC_04	H3	NVCC_EMC	Digital GPIO	GPIO4.IO[4]	ALT5	Input	Keeper	Input	Keeper
GPIO_EMC_05	E2	NVCC_EMC	Digital GPIO	GPIO4.IO[5]	ALT5	Input	Keeper	Input	Keeper
GPIO_EMC_06	H4	NVCC_EMC	Digital GPIO	GPIO4.IO[6]	ALT5	Input	Keeper	Input	Keeper
GPIO_EMC_07	G3	NVCC_EMC	Digital GPIO	GPIO4.IO[7]	ALT5	Input	Keeper	Input	Keeper
GPIO_EMC_08	G4	NVCC_EMC	Digital GPIO	GPIO4.IO[8]	ALT5	Input	Keeper	Input	Keeper
GPIO_EMC_09	D2	NVCC_EMC	Digital GPIO	GPIO4.IO[9]	ALT5	Input	Keeper	Input	Keeper
GPIO_EMC_10	H1	NVCC_EMC	Digital GPIO	GPIO4.IO[10]	ALT5	Input	Keeper	Input	Keeper
GPIO_EMC_11	F2	NVCC_EMC	Digital GPIO	GPIO4.IO[11]	ALT5	Input	Keeper	Input	Keeper
GPIO_EMC_12	J2	NVCC_EMC	Digital GPIO	GPIO4.IO[12]	ALT5	Input	Keeper	Input	Keeper
GPIO_EMC_13	B6	NVCC_EMC	Digital GPIO	GPIO4.IO[13]	ALT5	Input	Keeper	Input	Keeper
GPIO_EMC_14	A6	NVCC_EMC	Digital GPIO	GPIO4.IO[14]	ALT5	Input	Keeper	Input	Keeper
GPIO_EMC_15	D1	NVCC_EMC	Digital GPIO	GPIO4.IO[15]	ALT5	Input	Keeper	Input	Keeper
GPIO_EMC_16	A5	NVCC_EMC	Digital GPIO	GPIO4.IO[16]	ALT5	Input	Keeper	Input	Keeper
GPIO_EMC_17	B5	NVCC_EMC	Digital GPIO	GPIO4.IO[17]	ALT5	Input	Keeper	Input	Keeper
GPIO_EMC_18	C2	NVCC_EMC	Digital GPIO	GPIO4.IO[18]	ALT5	Input	Keeper	Input	Keeper
GPIO_EMC_19	B2	NVCC_EMC	Digital GPIO	GPIO4.IO[19]	ALT5	Input	Keeper	Input	Keeper
GPIO_EMC_20	B1	NVCC_EMC	Digital GPIO	GPIO4.IO[20]	ALT5	Input	Keeper	Input	Keeper

Table continues on the next page...

All information provided in this document is subject to legal disclaimers.

© 2025 NXP B.V. All rights reserved.

Downloaded from Arrow.com.

Table 88. 7 x 7 mm functional contact assignments*...continued*

Ball Name	7 x 7 Ball	Power Group	Ball Type	Default Setting				Default setting on Reset	
				Default Mode	Default Function	Input/ Output	Value	Input/ Output	Value
GPIO_EMC_21	E1	NVCC_EMC	Digital GPIO	GPIO4.IO[21]	ALT5	Input	Keeper	Input	Keeper
GPIO_EMC_22	G2	NVCC_EMC	Digital GPIO	GPIO4.IO[22]	ALT5	Input	Keeper	Input	Keeper
GPIO_EMC_23	H2	NVCC_EMC	Digital GPIO	GPIO4.IO[23]	ALT5	Input	Keeper	Input	Keeper
GPIO_EMC_24	D3	NVCC_EMC	Digital GPIO	GPIO4.IO[24]	ALT5	Input	Keeper	Input	Keeper
GPIO_EMC_25	F3	NVCC_EMC	Digital GPIO	GPIO4.IO[25]	ALT5	Input	Keeper	Input	Keeper
GPIO_EMC_26	A2	NVCC_EMC	Digital GPIO	GPIO4.IO[26]	ALT5	Input	Keeper	Input	Keeper
GPIO_EMC_27	C1	NVCC_EMC	Digital GPIO	GPIO4.IO[27]	ALT5	Input	100K PD	Input	100K PD
GPIO_EMC_28	F1	NVCC_EMC	Digital GPIO	GPIO4.IO[28]	ALT5	Input	Keeper	Input	Keeper
GPIO_EMC_29	G1	NVCC_EMC	Digital GPIO	GPIO4.IO[29]	ALT5	Input	Keeper	Input	Keeper
GPIO_EMC_30	C6	NVCC_EMC	Digital GPIO	GPIO4.IO[30]	ALT5	Input	Keeper	Input	Keeper
GPIO_EMC_31	B4	NVCC_EMC	Digital GPIO	GPIO4.IO[31]	ALT5	Input	Keeper	Input	Keeper
GPIO_EMC_32	D5	NVCC_EMC	Digital GPIO	GPIO3.IO[18]	ALT5	Input	Keeper	Input	Keeper
GPIO_EMC_33	A4	NVCC_EMC	Digital GPIO	GPIO3.IO[19]	ALT5	Input	Keeper	Input	Keeper
GPIO_EMC_34	C3	NVCC_EMC	Digital GPIO	GPIO3.IO[20]	ALT5	Input	Keeper	Input	Keeper
GPIO_EMC_35	C4	NVCC_EMC	Digital GPIO	GPIO3.IO[21]	ALT5	Input	Keeper	Input	Keeper
GPIO_EMC_36	B3	NVCC_EMC	Digital GPIO	GPIO3.IO[22]	ALT5	Input	Keeper	Input	Keeper
GPIO_EMC_37	A3	NVCC_EMC	Digital GPIO	GPIO3.IO[23]	ALT5	Input	Keeper	Input	Keeper
GPIO_EMC_38	C5	NVCC_EMC	Digital GPIO	GPIO3.IO[24]	ALT5	Input	Keeper	Input	Keeper

Table continues on the next page...

All information provided in this document is subject to legal disclaimers.

© 2025 NXP B.V. All rights reserved.

Downloaded from Arrow.com.

Table 88. 7 x 7 mm functional contact assignments*...continued*

Ball Name	7 x 7 Ball	Power Group	Ball Type	Default Setting				Default setting on Reset	
				Default Mode	Default Function	Input/ Output	Value	Input/ Output	Value
GPIO_EMC_39	B7	NVCC_EMC	Digital GPIO	GPIO3.IO[25]	ALT5	Input	Keeper	Input	Keeper
GPIO_EMC_40	A7	NVCC_EMC	Digital GPIO	GPIO3.IO[26]	ALT5	Input	Keeper	Input	Keeper
GPIO_EMC_41	D6	NVCC_EMC	Digital GPIO	GPIO3.IO[27]	ALT5	Input	Keeper	Input	Keeper
GPIO_SD_B0_00	J4	NVCC_SD0	Digital GPIO	GPIO3.IO[12]	ALT5	Input	Keeper	Input	Keeper
GPIO_SD_B0_01	K4	NVCC_SD0	Digital GPIO	GPIO3.IO[13]	ALT5	Input	Keeper	Input	Keeper
GPIO_SD_B0_02	K3	NVCC_SD0	Digital GPIO	GPIO3.IO[14]	ALT5	Input	Keeper	Input	Keeper
GPIO_SD_B0_03	K1	NVCC_SD0	Digital GPIO	GPIO3.IO[15]	ALT5	Input	Keeper	Input	Keeper
GPIO_SD_B0_04	J3	NVCC_SD0	Digital GPIO	GPIO3.IO[16]	ALT5	Input	Keeper	Input	Keeper
GPIO_SD_B0_05	K2	NVCC_SD0	Digital GPIO	GPIO3.IO[17]	ALT5	Input	Keeper	Input	Keeper
GPIO_SD_B1_00	L6	NVCC_SD1	Digital GPIO	GPIO3.IO[0]	ALT5	Input	Keeper	Input	Keeper
GPIO_SD_B1_01	J7	NVCC_SD1	Digital GPIO	GPIO3.IO[1]	ALT5	Input	Keeper	Input	Keeper
GPIO_SD_B1_02	L4	NVCC_SD1	Digital GPIO	GPIO3.IO[2]	ALT5	Input	Keeper	Input	Keeper
GPIO_SD_B1_03	L3	NVCC_SD1	Digital GPIO	GPIO3.IO[3]	ALT5	Input	Keeper	Input	Keeper
GPIO_SD_B1_04	M4	NVCC_SD1	Digital GPIO	GPIO3.IO[4]	ALT5	Input	Keeper	Input	Keeper
GPIO_SD_B1_05	M5	NVCC_SD1	Digital GPIO	GPIO3.IO[5]	ALT5	Input	Keeper	Input	Keeper
GPIO_SD_B1_06	L5	NVCC_SD1	Digital GPIO	GPIO3.IO[6]	ALT5	Input	Keeper	Input	Keeper
GPIO_SD_B1_07	K5	NVCC_SD1	Digital GPIO	GPIO3.IO[7]	ALT5	Input	Keeper	Input	Keeper
GPIO_SD_B1_08	N5	NVCC_SD1	Digital GPIO	GPIO3.IO[8]	ALT5	Input	Keeper	Input	Keeper

Table continues on the next page...

All information provided in this document is subject to legal disclaimers.

© 2025 NXP B.V. All rights reserved.

Downloaded from Arrow.com.

Table 88. 7 x 7 mm functional contact assignments...*continued*

Ball Name	7 x 7 Ball	Power Group	Ball Type	Default Setting				Default setting on Reset	
				Default Mode	Default Function	Input/ Output	Value	Input/ Output	Value
GPIO_SD_B1_09	K6	NVCC_SD1	Digital GPIO	GPIO3.IO[9]	ALT5	Input	Keeper	Input	Keeper
GPIO_SD_B1_10	M6	NVCC_SD1	Digital GPIO	GPIO3.IO[10]	ALT5	Input	Keeper	Input	Keeper
GPIO_SD_B1_11	N6	NVCC_SD1	Digital GPIO	GPIO3.IO[11]	ALT5	Input	Keeper	Input	Keeper
ONOFF	M7	VDD_SNVS_IN	Digital GPIO	ONOFF	-	Input	100K PU	Input	100K PU
PMIC_ON_REQ	K8	VDD_SNVS_IN	Digital GPIO	PMIC_ON_REQ	-	Output	100K PU	Output	100K PU
POR_B	N7	VDD_SNVS_IN	Digital GPIO	POR_B	-	Input	100K PU	Input	100K PU
TEST_MODE	L7	VDD_SNVS_IN	Digital GPIO	TEST_MODE	-	Input	100K PD	Input	100K PD
RTC_XTALI	N8	-	-	-	-	-	-	-	-
RTC_XTALO	N9	-	-	-	-	-	-	-	-
USB_OTG1_DN	L9	-	-	-	-	-	-	-	-
USB_OTG1_DP	M9	-	-	-	-	-	-	-	-
USB_OTG1_VBUS	M8	-	-	-	-	-	-	-	-
XTALI	M10	-	-	-	-	-	-	-	-
XTALO	L10	-	-	-	-	-	-	-	-

[1] This pin output is in a high level until the system reset is complete.

6.3.3 7 x 7 mm, 0.5 mm pitch, ball map

Table 89 shows the 7 x 7 mm, 0.5 mm pitch ball map for the i.MX RT1046.

Table 89. 7x7 mm, 0.5 mm pitch, ball map

	1	2	3	4	5	6	7	8	9	10	11	12	13
A	VSS	GPIO_EMC_26	GPIO_EMC_37	GPIO_EMC_33	GPIO_EMC_16	GPIO_EMC_14	GPIO_EMC_40	GPIO_B0_05	GPIO_B0_07	GPIO_B0_11	GPIO_B1_00	GPIO_B1_08	VSS
B	GPIO_EMC_20	GPIO_EMC_19	GPIO_EMC_36	GPIO_EMC_31	GPIO_EMC_17	GPIO_EMC_13	GPIO_EMC_39	GPIO_B0_06	GPIO_B0_08	GPIO_B0_09	GPIO_B0_12	GPIO_B1_01	GPIO_B1_09

Table continues on the next page...

All information provided in this document is subject to legal disclaimers.

© 2025 NXP B.V. All rights reserved.

Downloaded from Arrow.com.

Table 89. 7x7 mm, 0.5 mm pitch, ball map *...continued*

C	GPIO_EMC_27	GPIO_EMC_18	GPIO_EMC_34	GPIO_EMC_35	GPIO_EMC_38	GPIO_EMC_30	VSS	GPIO_B0_00	GPIO_B0_01	GPIO_B0_10	GPIO_B1_03	GPIO_B1_07	GPIO_B1_06
D	GPIO_EMC_15	GPIO_EMC_09	GPIO_EMC_24	GPIO_EMC_00	GPIO_EMC_32	GPIO_EMC_41	VSS	GPIO_B0_04	GPIO_B0_03	GPIO_B0_02	GPIO_B1_05	GPIO_B1_10	GPIO_B1_15
E	GPIO_EMC_21	GPIO_EMC_05	GPIO_EMC_01	GPIO_EMC_02	VDD_SOC_IN	VDD_SOC_IN	VDD_SOC_IN	VDD_SOC_IN	GPIO_B0_14	GPIO_B0_13	GPIO_B0_15	GPIO_B1_11	GPIO_B1_14
F	GPIO_EMC_28	GPIO_EMC_11	GPIO_EMC_25	GPIO_EMC_03	NVCC_EMC	VDD_SOC_IN	VDD_SOC_IN	VDD_SOC_IN	GPIO_AD_B0_04	GPIO_B1_02	GPIO_B1_04	GPIO_B1_12	GPIO_B1_13
G	GPIO_EMC_29	GPIO_EMC_22	GPIO_EMC_07	GPIO_EMC_08	NVCC_EMC	VSS	VSS	NVCC_GPIO	GPIO_AD_B0_07	GPIO_AD_B0_08	GPIO_AD_B0_11	GPIO_AD_B0_06	GPIO_AD_B0_09
H	GPIO_EMC_10	GPIO_EMC_23	GPIO_EMC_04	GPIO_EMC_06	VSS	VSS	VSS	NVCC_GPIO	GPIO_AD_B0_10	GPIO_AD_B1_14	GPIO_AD_B1_13	GPIO_AD_B1_08	GPIO_AD_B0_05
J	VSS	GPIO_EMC_12	GPIO_SD_B0_04	GPIO_SD_B0_00	NVCC_SD0	NVCC_SD1	GPIO_SD_B1_01	VSS	GPIO_AD_B1_12	GPIO_AD_B1_05	GPIO_AD_B1_06	GPIO_AD_B1_11	GPIO_AD_B1_15
K	GPIO_SD_B0_03	GPIO_SD_B0_05	GPIO_SD_B0_02	GPIO_SD_B0_01	GPIO_SD_B1_07	GPIO_SD_B1_09	VDD_SNVS_IN	PMIC_ON_REQ	NGND_KEL0	VDD_SNVS_CAP	GPIO_AD_B1_04	GPIO_AD_B0_13	GPIO_AD_B0_12
L	DCDC_IN	DCDC_IN	GPIO_SD_B1_03	GPIO_SD_B1_02	GPIO_SD_B1_06	GPIO_SD_B1_00	TEST_MODE	VDD_USB_CAP	USB_OTG1_DN	XTALO	GPIO_AD_B1_07	VDDA_ADC_3P3	GPIO_AD_B1_10
M	DCDC_LP	DCDC_LP	DCDC_GND	GPIO_SD_B1_04	GPIO_SD_B1_05	GPIO_SD_B1_10	ONOFF	USB_OTG1_VBUS	USB_OTG1_DP	XTALI	VDD_HIGH_IN	VSS	GPIO_AD_B1_03
N	VSS	DCDC_IN_Q	DCDC_GND	DCDC_PSWITCH	GPIO_SD_B1_08	GPIO_SD_B1_11	POR_B	RTC_XTALI	RTC_XTALO	VDD_HIGH_CAP	NVCC_PLL	GPIO_AD_B1_09	VSS

7 Revision history

Table 90 provides a revision history for this data sheet.

Table 90. i.MX RT1040 Data Sheet document revision history

Document ID	Release date	Description
IMXRT1040CECv.5.0	11/2025	• Updated 7 x 7 mm, 0.5 mm pitch, ball map.
IMXRT1040CECv.4.0	04/2025	• Added a new part number "MIMXRT1043DJM6B". • Updated Ordering information for the part number MIMXRT1043DJM6B.

Table continues on the next page...

All information provided in this document is subject to legal disclaimers.

© 2025 NXP B.V. All rights reserved.

Downloaded from Arrow.com.

Table 90. i.MX RT1040 Data Sheet document revision history*...continued*

Document ID	Release date	Description
IMXRT1040CECv.3.0	09/2024	• Updated "512 KB OCRAM" to "512 KB FlexRAM in Features. • Updated "512 KB TCM" to "512 KB FlexRAM" in Figure 2. • Added one footnote for GPIO_EMC_03 in 9 x 9 mm supplies contact assignments and functional contact assignments, and 11 x 11 mm supplies contact assignments and functional contact assignments. • Added the package and information of RT1046. • Added the package and information of RT1043. • Updated the feature "On-chip RAM (512 KB)" to "FlexRAM (512 KB)" for Part Numbers: MIMXRT1041DFP6B, MIMXRT1042DFP6B, MIMXRT1042DJM6B, MIMXRT1041DJM6B in Ordering information. • Updated the feature "600 MHz, industrial with MPU/FPU" to "600 MHz, commercial grade for general purpose, with MPU/FPU" for Part Numbers: MIMXRT1042DJM6B and MIMXRT1041DJM6B in Ordering information. • Updated "TCM" to "FlexRAM" in the 'Internal Memory' in Figure 2 • Added 11 x 11 MM thermal resistance. • Modified the 'Max. operating range' for 'System frequency/Bus frequency' in Table 11.
IMXRT1040CECv.2.0	01/2023	• Added new part numbers "MIMXRT1042DJM6B" and "MIMXRT1041DJM6B" and relevant information in the document. • Added 11 x 11 mm package information. • Updated Table 84 as per 11 x 11 mm, 0.8 mm pitch, ball map
IMXRT1040CECv.1.0	09/2022	• Initial release

All information provided in this document is subject to legal disclaimers.

© 2025 NXP B.V. All rights reserved.

Downloaded from Arrow.com.

Legal information

Data sheet status

Document status[1][2]	Product status[3]	Definition
Objective [short] data sheet	Development	This document contains data from the objective specification for product development.
Preliminary [short] data sheet	Qualification	This document contains data from the preliminary specification.
Product [short] data sheet	Production	This document contains the product specification.

[1] Please consult the most recently issued document before initiating or completing a design.
[2] The term 'short data sheet' is explained in section "Definitions".
[3] The product status of device(s) described in this document may have changed since this document was published and may differ in case of multiple devices. The latest product status information is available on the Internet at URL https://www.nxp.com.

Definitions

Draft — A draft status on a document indicates that the content is still under internal review and subject to formal approval, which may result in modifications or additions. NXP Semiconductors does not give any representations or warranties as to the accuracy or completeness of information included in a draft version of a document and shall have no liability for the consequences of use of such information.

Short data sheet — A short data sheet is an extract from a full data sheet with the same product type number(s) and title. A short data sheet is intended for quick reference only and should not be relied upon to contain detailed and full information. For detailed and full information see the relevant full data sheet, which is available on request via the local NXP Semiconductors sales office. In case of any inconsistency or conflict with the short data sheet, the full data sheet shall prevail.

Product specification — The information and data provided in a Product data sheet shall define the specification of the product as agreed between NXP Semiconductors and its customer, unless NXP Semiconductors and customer have explicitly agreed otherwise in writing. In no event however, shall an agreement be valid in which the NXP Semiconductors product is deemed to offer functions and qualities beyond those described in the Product data sheet.

Disclaimers

Limited warranty and liability — Information in this document is believed to be accurate and reliable. However, NXP Semiconductors does not give any representations or warranties, expressed or implied, as to the accuracy or completeness of such information and shall have no liability for the consequences of use of such information. NXP Semiconductors takes no responsibility for the content in this document if provided by an information source outside of NXP Semiconductors.

In no event shall NXP Semiconductors be liable for any indirect, incidental, punitive, special or consequential damages (including - without limitation - lost profits, lost savings, business interruption, costs related to the removal or replacement of any products or rework charges) whether or not such damages are based on tort (including negligence), warranty, breach of contract or any other legal theory.

Notwithstanding any damages that customer might incur for any reason whatsoever, NXP Semiconductors' aggregate and cumulative liability towards customer for the products described herein shall be limited in accordance with the Terms and conditions of commercial sale of NXP Semiconductors.

Right to make changes — NXP Semiconductors reserves the right to make changes to information published in this document, including without limitation specifications and product descriptions, at any time and without notice. This document supersedes and replaces all information supplied prior to the publication hereof.

Suitability for use — NXP Semiconductors products are not designed, authorized or warranted to be suitable for use in life support, life-critical or safety-critical systems or equipment, nor in applications where failure or malfunction of an NXP Semiconductors product can reasonably be expected to result in personal injury, death or severe property or environmental damage. NXP Semiconductors and its suppliers accept no liability for inclusion and/or use of NXP Semiconductors products in such equipment or applications and therefore such inclusion and/or use is at the customer's own risk.

All information provided in this document is subject to legal disclaimers.

© 2025 NXP B.V. All rights reserved.

Downloaded from Arrow.com.

Applications — Applications that are described herein for any of these products are for illustrative purposes only. NXP Semiconductors makes no representation or warranty that such applications will be suitable for the specified use without further testing or modification.

Customers are responsible for the design and operation of their applications and products using NXP Semiconductors products, and NXP Semiconductors accepts no liability for any assistance with applications or customer product design. It is customer's sole responsibility to determine whether the NXP Semiconductors product is suitable and fit for the customer's applications and products planned, as well as for the planned application and use of customer's third party customer(s). Customers should provide appropriate design and operating safeguards to minimize the risks associated with their applications and products.

NXP Semiconductors does not accept any liability related to any default, damage, costs or problem which is based on any weakness or default in the customer's applications or products, or the application or use by customer's third party customer(s). Customer is responsible for doing all necessary testing for the customer's applications and products using NXP Semiconductors products in order to avoid a default of the applications and the products or of the application or use by customer's third party customer(s). NXP does not accept any liability in this respect.

Limiting values — Stress above one or more limiting values (as defined in the Absolute Maximum Ratings System of IEC 60134) will cause permanent damage to the device. Limiting values are stress ratings only and (proper) operation of the device at these or any other conditions above those given in the Recommended operating conditions section (if present) or the Characteristics sections of this document is not warranted. Constant or repeated exposure to limiting values will permanently and irreversibly affect the quality and reliability of the device.

Terms and conditions of commercial sale — NXP Semiconductors products are sold subject to the general terms and conditions of commercial sale, as published at https://www.nxp.com/profile/terms, unless otherwise agreed in a valid written individual agreement. In case an individual agreement is concluded only the terms and conditions of the respective agreement shall apply. NXP Semiconductors hereby expressly objects to applying the customer's general terms and conditions with regard to the purchase of NXP Semiconductors products by customer.

No offer to sell or license — Nothing in this document may be interpreted or construed as an offer to sell products that is open for acceptance or the grant, conveyance or implication of any license under any copyrights, patents or other industrial or intellectual property rights.

Quick reference data — The Quick reference data is an extract of the product data given in the Limiting values and Characteristics sections of this document, and as such is not complete, exhaustive or legally binding.

Export control — This document as well as the item(s) described herein may be subject to export control regulations. Export might require a prior authorization from competent authorities.

Suitability for use in non-automotive qualified products — Unless this document expressly states that this specific NXP Semiconductors product is automotive qualified, the product is not suitable for automotive use. It is neither qualified nor tested in accordance with automotive testing or application requirements. NXP Semiconductors accepts no liability for inclusion and/or use of non-automotive qualified products in automotive equipment or applications.

In the event that customer uses the product for design-in and use in automotive applications to automotive specifications and standards, customer (a) shall use the product without NXP Semiconductors' warranty of the product for such automotive applications, use and specifications, and (b) whenever customer uses the product for automotive applications beyond NXP Semiconductors' specifications such use shall be solely at customer's own risk, and (c) customer fully indemnifies NXP Semiconductors for any liability, damages or failed product claims resulting from customer design and use of the product for automotive applications beyond NXP Semiconductors' standard warranty and NXP Semiconductors' product specifications.

HTML publications — An HTML version, if available, of this document is provided as a courtesy. Definitive information is contained in the applicable document in PDF format. If there is a discrepancy between the HTML document and the PDF document, the PDF document has priority.

Translations — A non-English (translated) version of a document, including the legal information in that document, is for reference only. The English version shall prevail in case of any discrepancy between the translated and English versions.

Security — Customer understands that all NXP products may be subject to unidentified vulnerabilities or may support established security standards or specifications with known limitations. Customer is responsible for the design and operation of its applications and products throughout their lifecycles to reduce the effect of these vulnerabilities on customer's applications and products. Customer's responsibility also extends to other open and/or proprietary technologies supported by NXP products for use in customer's applications. NXP accepts no liability for any vulnerability. Customer should regularly check security updates from NXP and follow up appropriately.

Customer shall select products with security features that best meet rules, regulations, and standards of the intended application and make the ultimate design decisions regarding its products and is solely responsible for compliance with all legal, regulatory, and security related requirements concerning its products, regardless of any information or support that may be provided by NXP.

NXP has a Product Security Incident Response Team (PSIRT) (reachable at PSIRT@nxp.com) that manages the investigation, reporting, and solution release to security vulnerabilities of NXP products.

NXP B.V. — NXP B.V. is not an operating company and it does not distribute or sell products.

Trademarks

Notice: All referenced brands, product names, service names, and trademarks are the property of their respective owners.

All information provided in this document is subject to legal disclaimers.

© 2025 NXP B.V. All rights reserved.

Downloaded from Arrow.com.

NXP — wordmark and logo are trademarks of NXP B.V.

All information provided in this document is subject to legal disclaimers.

© 2025 NXP B.V. All rights reserved.

Downloaded from Arrow.com.

Contents

1 i.MX RT1040 Introduction....2
1.1 Features....2
1.2 Ordering information....5
2 Architectural Overview....10
2.1 Block diagram....10
3 Modules List....13
3.1 Special signal considerations....20
3.2 Recommended connections for unused analog interfaces....22
4 Electrical Characteristics....22
4.1 Chip-Level conditions....23
4.1.1 Absolute maximum ratings....23
4.1.2 Thermal resistance....24
4.1.3 Operating ranges....25
4.1.4 External clock sources....27
4.1.5 Maximum supply currents....27
4.1.6 Low power mode supply currents....28
4.1.7 USB PHY current consumption....29
4.2 System power and clocks....29
4.2.1 Power supplies requirements and restrictions..29
4.2.2 Integrated LDO voltage regulator parameters..30
4.2.3 PLL's electrical characteristics....32
4.2.4 Arm PLL....33
4.2.5 On-chip oscillators....33
4.3 I/O parameters....34
4.3.1 I/O DC parameters....35
4.3.2 I/O AC parameters....38
4.3.3 Output buffer impedance parameters....39
4.4 System modules....41
4.4.1 Reset timings parameters....41
4.4.2 WDOG reset timing parameters....41
4.4.3 SCAN JTAG Controller (SJC) timing parameters....42
4.4.4 Debug trace timing specifications....43
4.5 External memory interface....44
4.5.1 SEMC specifications....44
4.5.2 FlexSPI parameters....48
4.6 Display and graphics....53
4.6.1 LCD Controller (LCDIF) timing parameters....53
4.7 Audio....54
4.7.1 SAI/I2S switching specifications....54
4.7.2 SPDIF timing parameters....56
4.8 Analog....57
4.8.1 DCDC....57
4.8.2 A/D converter....58
4.8.3 ACMP....64
4.9 Communication interfaces....65
4.9.1 LPSPI timing parameters....66
4.9.2 LPI2C module timing parameters....68
4.9.3 Ultra High Speed SD/SDIO/MMC Host Interface (uSDHC) AC timing....69
4.9.4 Ethernet controller (ENET) AC electrical specifications....73
4.9.5 Flexible Controller Area Network (FLEXCAN) AC electrical specifications....76
4.9.6 LPUART electrical specifications....76
4.9.7 USB PHY parameters....76
4.10 Timers....77
4.10.1 Pulse Width Modulator (PWM) characteristics.77
4.10.2 Quad timer timing....77
5 Boot mode configuration....78
5.1 Boot mode configuration pins....78
5.2 Boot device interface allocation....79
6 Package information and contact assignments 83
6.1 9 x 9 mm package information....83
6.1.1 9 x 9 mm, 0.65 mm pitch, ball matrix....83
6.1.2 9 x 9 mm supplies contact assignments and functional contact assignments....85
6.1.3 9 x 9 mm, 0.65 mm pitch, ball map....93
6.2 11 x 11 mm package information....94
6.2.1 11 x 11 mm, 0.8 mm pitch, ball matrix....94
6.2.2 11 x 11 mm supplies contact assignments and functional contact assignments....95
6.2.3 11 x 11 mm, 0.8 mm pitch, ball map....103
6.3 7 x 7 mm package information....104
6.3.1 7 x 7 mm, 0.5 mm pitch, ball matrix....105
6.3.2 7 x 7 mm supplies contact assignments and functional contact assignments....105
6.3.3 7 x 7 mm, 0.5 mm pitch, ball map....113
7 Revision history....114
Legal information....116

All information provided in this document is subject to legal disclaimers.

© 2025 NXP B.V. All rights reserved.

Downloaded from Arrow.com.

Please be aware that important notices concerning this document and the product(s) described herein, have been included in section 'Legal information'.

© 2025 NXP B.V. All rights reserved.

For more information, please visit: https://www.nxp.com

Date of release: 20 November 2025
Document identifier: IMXRT1040CEC

Downloaded from Arrow.com.