TITLE: TETHERED OBD CAP, METAL WIRE, AHD 9 POSITION SERIES	DWG NO: AHDC169-TMOBDBK	REV: A1	SH: 1	OF: 1

REVISIONS

REV	ECO	DESCRIPTION	DATE	BY	APPR
A1		RELEASE CUSTOMER DRAWING	06NOV13	DRP	

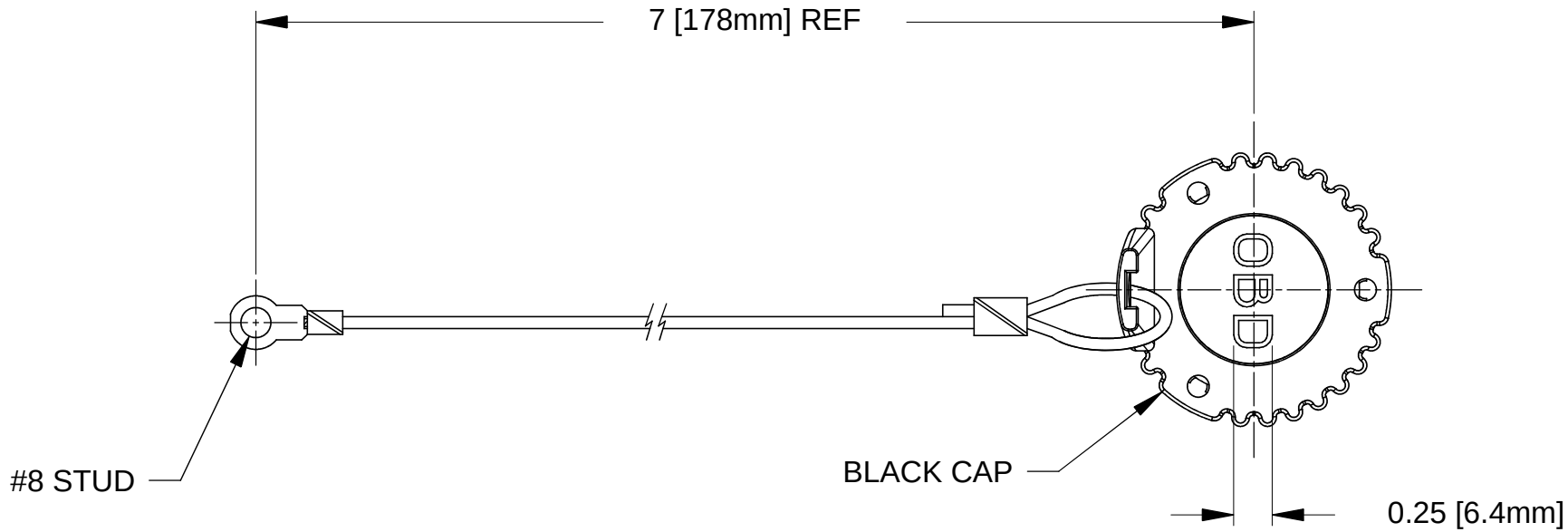

NOTES: UNLESS OTHERWISE SPECIFIED

1. COMPATIBLE WITH AHD SERIES 9 POSITION RECEPTACLES .
2. ALL COMPONENTS ARE RoHS COMPLIANT.
3. ALL DIMENSIONS ARE FOR REFERENCE USE ONLY.

QUANTITY	PART NUMBER	DESCRIPTION	ITEM
	AHDC169-TMOBDBK		

MATERIALS LIST

UNLESS OTHERWISE SPECIFIED
1) All dimensions are in metric(mm).
2) Tolerances are as follows:
1 PL DEC ±0.30
2 PL DEC ±0.15
3 PL DEC ±0.08
Fractions ±1/64
Angles ±1°
3) Note reference = X

MATERIAL SPECIFICATIONS:

PROCESS SPECIFICATIONS:

NEXT ASS'Y:

SIGNATURES		DATE
DRAWN:	DRP	06NOV13
CHECKED:		
ENGINEER:		
APPROVAL:		
CUSTOMER:		

THIS DRAWING IS SUPPLIED FOR INFORMATION ONLY. DESIGN FEATURES, SPECIFICATIONS AND PERFORMANCE DATA SHOWN HEREON ARE THE PROPERTY OF THE AMPHENOL CORPORATION. NO RIGHTS OF REPRODUCTION ARE IMPLIED. ALL DIMENSIONS ARE SUBJECT TO NORMAL MANUFACTURING VARIATIONS.

Amphenol

Sine Systems - www.amphenol-sine.com
44724 Morley Drive
Clinton Township, MI 48036

TETHERED OBD CAP, METAL WIRE,
AHD 9 POSITION SERIES

SIZE	TYPE	DWG NO:	REVISION
A	C-	AHDC169-TMOBDBK	A1

SCALE: NONE SHEET 1 OF 1

Downloaded from Arrow.com.