© 2022 TE Connectivity. All Rights Reserved.

REVISIONS					
P	LTR	DESCRIPTION	DATE	DWN	APVD
	A	INITIAL REVISION	22FEB2022	KR	RM

SECTION A-A

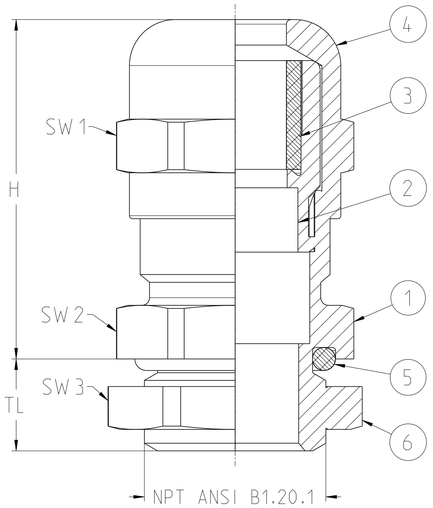

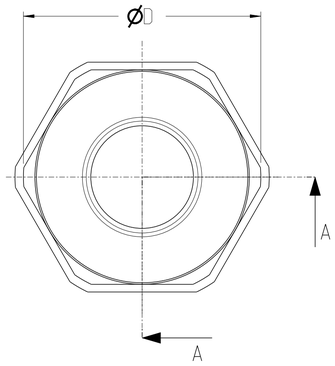

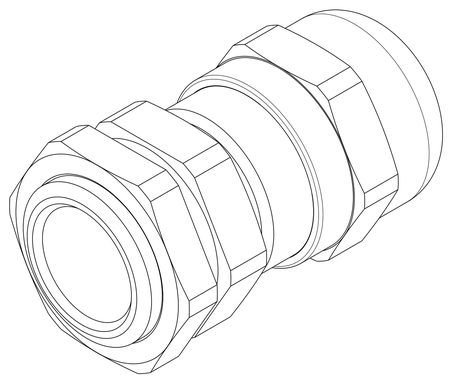

TCPN	TE Product Type (Entrelec)	NPT ANSI B1.20.1	TL	H	ØD	SW1	SW2	SW3	Clamping Range Ø min - max
1SNG625047R0000	EM-SGL-NPT12-MET-A	NPT 1/2"	13.0	25.6	24.5	22	22	24	5.0 - 9.0
1SNG625048R0000	EM-SGL-NPT12-MET-B	NPT 1/2"	13.0	25.5	24.5	22	22	24	6.0 - 12.0
1SNG625049R0000	EM-SGL-NPT12-MET-C	NPT 1/2"	13.0	28.0	26.8	24	24	24	7.0 - 12.0
1SNG625050R0000	EM-SGL-NPT12-MET-D	NPT 1/2"	13.0	28.0	26.8	24	24	24	10.0 - 14.0
1SNG625051R0000	EM-SGL-NPT34-MET-A	NPT 3/4"	13.0	36.0	33.0	30	30	34	9.0 - 16.0
1SNG625052R0000	EM-SGL-NPT34-MET-B	NPT 3/4"	13.0	36.0	33.0	30	30	34	13.0 - 18.0
1SNG625053R0000	EM-SGL-NPT1-MET-A	NPT 1"	13.0	43.6	48.5	40	43	42	12.0 - 20.0
1SNG625054R0000	EM-SGL-NPT1-MET-B	NPT 1"	13.0	43.6	48.5	40	43	42	18.0 - 25.0
1SNG625055R0000	EM-SGL-NPT114-MET-A	NPT 1 1/4"	25.6	47.8	55.5	50	50	52	22.0 - 32.0
1SNG625056R0000	EM-SGL-NPT112-MET-A	NPT 1 1/2"	26.0	48.9	64.0	58	58	60	30.0 - 38.0
1SNG625057R0000	EM-SGL-NPT2-MET-A	NPT 2"	27.0	52.8	70.0	64	64	74	34.0 - 44.0

RPT	QTY	DOC TITLE	DRAWING NUMBER	MATERIAL	COMMENTS
6	1	LOCK NUT	-	Brass (Nickel plated)	-
5	1	O-RING	-	NBR	-
4	1	METAL GLAND CAP	-	Brass (Nickel plated)	-
3	1	SEAL	-	CR	-
2	1	PLASTIC INSERT	-	PA6 V2	-
1	1	METAL GLAND BODY	-	Brass (Nickel plated)	-

THIS DRAWING IS A CONTROLLED DOCUMENT.

DIMENSIONS: mm

TOLERANCES UNLESS OTHERWISE SPECIFIED:
0 PLC ±
1 PLC ±1
2 PLC ±1
3 PLC ±1
4 PLC ±1
ANGLES ±

MATERIAL: REF. TABLE -

FINISH: REF. TABLE -

DWN Rajan n. Kasi 22FEB2022
CHK Rafeeq. Mohd 22FEB2022
APVD Rafeeq. Mohd 22FEB2022
PRODUCT SPEC NPT-STD-GLAND-BRASS-LN
APPLICATION SPEC -
WEIGHT -

TE Connectivity

NAME - NPT-STD-GLAND-BRASS-LN -

SIZE	CAGE CODE	DRAWING NO	RESTRICTED TO
A1	00779	1SNP061343-0100	-

CUSTOMER DRAWING | SCALE 5:1 | SHEET 1 OF 1 | REV A1

4805 (3/13)

Downloaded from Arrow.com.