SUREWARE™
ULTRA RUGGED HARDWARE

BOARD-TO-BOARD GUIDE POST STANDOFF

GPSO SERIES

GPSO
Use With:
NVAX, APX6, ADX6, UMPX, UDX6

GPSO	–	BOARD STACK HEIGHT	–	LEAD STYLE	–	MATERIAL	–	KIT OPTION
		Specify BOARD STACK HEIGHT from chart		**–01** = Press-In **–02** = Press-In with Nut		**–01** = 303 Stainless Steel with MIL-C-13924 black oxide finish		**–N** = No hardware (Standoff only) Leave blank for kit

SPECIFICATIONS

Locking Compound:
Nylon

BOARD STACK HEIGHT	A	B	C
–0400	(4.00) .157	(3.15) .124	(3.65) .144
–0500	(5.00) .197	(4.15) .163	(4.65) .183
–0515	(5.15) .203	(4.30) .169	(4.80) .189
–0700	(7.00) .276	(6.15) .242	(6.65) .262
–0715	(7.15) .281	(6.30) .248	(6.80) .268
–0865	(8.65) .341	(7.80) .307	(8.30) .327
–0900	(9.00) .354	(8.15) .321	(8.65) .341
–0915	(9.15) .360	(8.30) .327	(8.80) .346
–1000	(10.00) .394	(9.15) .360	(9.65) .380
–1015	(10.15) .400	(9.30) .366	(9.80) .386
–1115	(11.15) .439	(10.30) .406	(10.80) .425
–1200	(12.00) .472	(11.15) .439	(11.65) .459
–1215	(12.15) .478	(11.30) .445	(11.80) .465
–1315	(13.15) .518	(12.30) .484	(12.80) .504
–1415	(14.15) .557	(13.30) .524	(13.80) .543
–1515	(15.15) .596	(14.30) .563	(14.80) .583
–1524	(15.24) .600	(14.39) .567	(14.89) .586
–1615	(16.15) .636	(15.30) .602	(15.80) .622

Notes:
Standoffs to be used with (1.57 mm) .062" min thick boards. Threaded options PCB max thickness of (3.16 mm) .124".

Some sizes, styles and options are non-standard, non-returnable.

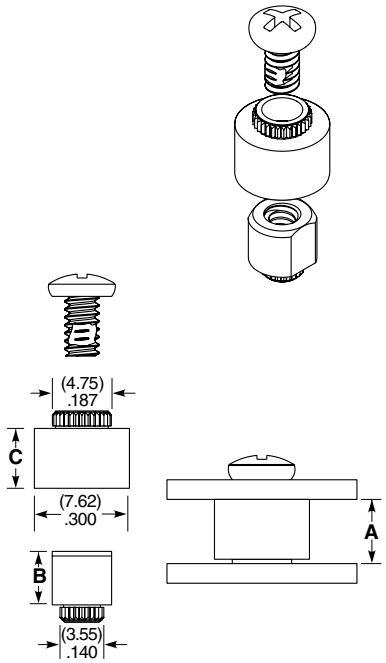

-01 LEAD STYLE

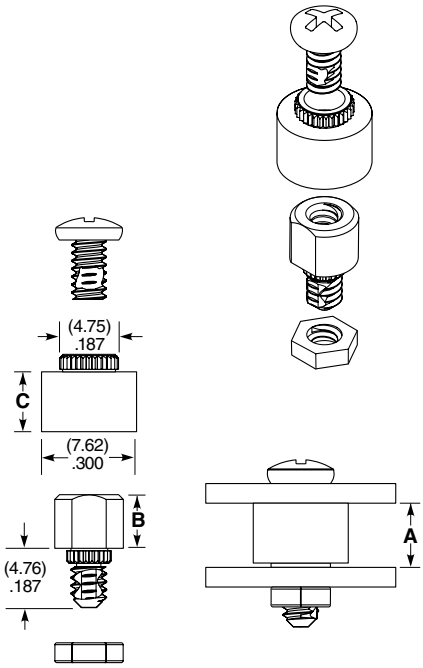

-02 LEAD STYLE

Components are to be packaged in separate bags unassembled.
Top and bottom components available for purchase separately, contact Samtec.

APPLICATIONS

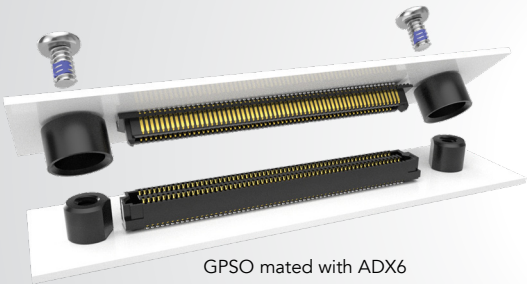

GPSO mated with ADX6

GPSO mated with UMPX

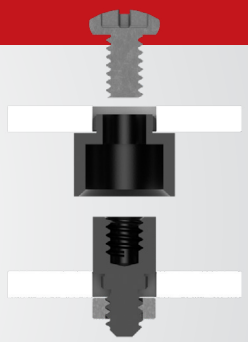

Alignment starts before connectors engage.

Allows for 0.035" of initial misalignment

Unless otherwise approved in writing by Samtec, all parts and components are designed and built according to Samtec's specifications which are subject to change without notice.
Downloaded from Arrow.com.