256 kb Low Power Serial SRAMs

N25S818HA

32 k x 8 Bit Organization

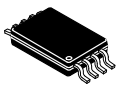

TSSOP-8
T SUFFIX
CASE 948AL



SOIC-8
S SUFFIX
CASE 751BD

MARKING DIAGRAM

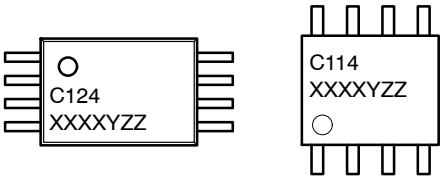

XXXX = Date Code
Y = Assembly Code
ZZ = Lot Traceability

ORDERING INFORMATION

Device	Package	Shipping†
N25S818HAS21I	SOIC-8 (Pb-Free)	100 Units / Tube
N25S818HAT21I	TSSOP-8 (Pb-Free)	100 Units / Tube

DISCONTINUED (Note 1)

N25S818HAS21IT	SOIC-8 (Pb-Free)	3000 / Tape & Reel
N25S818HAT21IT	TSSOP-8 (Pb-Free)	3000 / Tape & Reel

† For information on tape and reel specifications, including part orientation and tape sizes, please refer to our Tape and Reel Packaging Specifications Brochure, BRD8011/D.

1. **DISCONTINUED:** This device is not available. Please contact your **onsemi** representative for information. The most current information on this device may be available on www.onsemi.com.

Introduction

The **onsemi** serial SRAM family includes several integrated memory devices including this 256 kb serially accessed Static Random Access Memory, internally organized as 32 k words by 8 bits. The devices are designed and fabricated using **onsemi** advanced CMOS technology to provide both high-speed performance and low power. The devices operate with a single chip select ($\overline{CS}$) input and use a simple Serial Peripheral Interface (SPI) serial bus. A single data in and data out line is used along with a clock to access data within the devices. The N25S818HA devices include a $\overline{HOLD}$ pin that allows communication to the device to be paused. While paused, input transitions will be ignored. The devices can operate over a wide temperature range of −40 °C to +85 °C and can be available in several standard package offerings.

Features

- **Power Supply Range:** 1.7 to 1.95 V
- **Very Low Standby Current:** Typical Isb as low as 200 nA
- **Very Low Operating Current:** As low as 3 mA
- **Simple Memory Control:**
  Single chip select ($\overline{CS}$)
  Serial input (SI) and serial output (SO)
- **Flexible Operating Modes:**
  Word read and write
  Page mode (32 word page)
  Burst mode (full array)
- **Organization:** 32 k x 8 bit
- **Self Timed Write Cycles**
- **Built-in Write Protection ($\overline{CS}$ High)**
- **$\overline{HOLD}$ Pin for Pausing Communication**
- **High Reliability:** Unlimited write cycles
- Green SOIC and TSSOP
- These Devices are Pb-Free, Halogen Free/BFR Free and are RoHS Compliant

© Semiconductor Components Industries, LLC, 2012

Downloaded from Arrow.com.

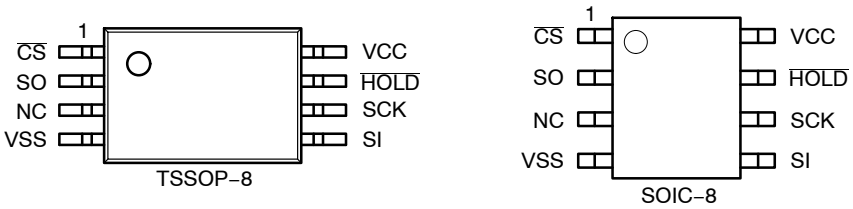

Figure 1. Pin Connections
(Top View)

Table 1. DEVICE OPTIONS

Part Number	Density	Power Supply (V)	Speed (MHz)	Package	Typical Standby Current	Read/Write Operating Current
N25S818HAS2	256 Kb	1.8	16	SOIC	200 nA	3 mA @ 1 Mhz
N25S818HAT2				TSSOP		

Table 2. PIN NAMES

Pin Name	Pin Function
$\overline{CS}$	Chip Select Input
SCK	Serial Clock Input
SI	Serial Data Input
SO	Serial Data Output
$\overline{HOLD}$	Hold Input
NC	No Connect
V_{CC}	Power
V_{SS}	Ground

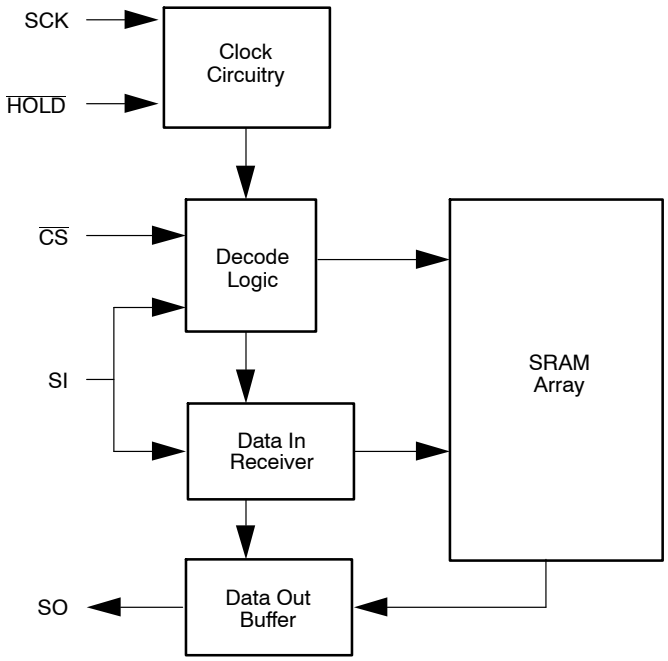

Figure 2. Functional Block Diagram

Share Feedback
Your Opinion Matters

Downloaded from Arrow.com.

Table 3. ABSOLUTE MAXIMUM RATINGS

Item	Symbol	Rating	Unit
Voltage on any pin relative to V_{SS}	$V_{IN,OUT}$	–0.3 to V_{CC} + 0.3	V
Voltage on V_{CC} Supply Relative to V_{SS}	V_{CC}	–0.3 to 4.5	V
Power Dissipation	P_D	500	mW
Storage Temperature	T_{STG}	–40 to 125	°C
Operating Temperature	T_A	–40 to +85	°C
Soldering Temperature and Time	T_{SOLDER}	260°C, 10 sec	°C

Stresses exceeding those listed in the Maximum Ratings table may damage the device. If any of these limits are exceeded, device functionality should not be assumed, damage may occur and reliability may be affected.

Table 4. OPERATING CHARACTERISTICS (Over Specified Temperature Range)

Item	Symbol	Test Conditions	Min	Typ (Note 2)	Max	Unit
Supply Voltage	V_{CC}	1.8 V Device	1.7		1.95	V
Input High Voltage	V_{IH}		0.7 x V_{CC}		V_{CC} + 0.3	V
Input Low Voltage	V_{IL}		–0.3		0.8	V
Output High Voltage	V_{OH}	I_{OH} = –0.4 mA	V_{CC} – 0.5			V
Output Low Voltage	V_{OL}	I_{OL} = 1 mA			0.2	V
Input Leakage Current	I_{LI}	$\overline{CS}$ = V_{CC}, V_{IN} = 0 to V_{CC}			0.5	μA
Output Leakage Current	I_{LO}	$\overline{CS}$ = V_{CC}, V_{OUT} = 0 to V_{CC}			0.5	μA
Read/Write Operating Current	I_{CC1}	F = 1 MHz, I_{OUT} = 0			3	mA
	I_{CC2}	F = 10 MHz, I_{OUT} = 0			6	mA
	I_{CC3}	F = fCLK MAX, I_{OUT} = 0			10	mA
Standby Current	I_{SB}	$\overline{CS}$ = V_{CC}, V_{IN} = V_{SS} or V_{CC}		200	500	nA

2. Typical values are measured at Vcc = Vcc Typ., T_A = 25 °C and are not 100% tested.

Table 5. CAPACITANCE (Note 3)

Item	Symbol	Test Condition	Min	Max	Unit
Input Capacitance	C_{IN}	V_{IN} = 0 V, f = 1 MHz, T_A = 25 °C		7	pF
I/O Capacitance	$C_{I/O}$	V_{IN} = 0 V, f = 1 MHz, T_A = 25 °C		7	pF

3. These parameters are verified in device characterization and are not 100% tested

Share Feedback
Your Opinion Matters

Downloaded from Arrow.com.

Table 6. TIMING TEST CONDITIONS

Item	
Input Pulse Level	0.1 V_{CC} to 0.9 V_{CC}
Input Rise and Fall Time	5 ns
Input and Output Timing Reference Levels	0.5 V_{CC}
Output Load	CL = 100 pF
Operating Temperature	−40 to +85 °C

Table 7. TIMING

Item	Symbol	Min	Max	Units
Clock Frequency	f_{CLK}		16	MHz
Clock Rise Time	t_R		2	μs
Clock Fall Time	t_F		2	μs
Clock High Time	t_{HI}	32		ns
Clock Low Time	t_{LO}	32		ns
Clock Delay Time	t_{CLD}	32		ns
$\overline{CS}$ Setup Time	t_{CSS}	32		ns
$\overline{CS}$ Hold Time	t_{CSH}	50		ns
$\overline{CS}$ Disable Time	t_{CSD}	32		ns
SCK to $\overline{CS}$	t_{SCS}	5		ns
Data Setup Time	t_{SU}	10		ns
Data Hold Time	t_{HD}	10		ns
Output Valid From Clock Low	t_V		32	ns
Output Hold Time	t_{HO}	0		ns
Output Disable Time	t_{DIS}		20	ns
$\overline{HOLD}$ Setup Time	t_{HS}	10		ns
$\overline{HOLD}$ Hold Time	t_{HH}	10		ns
$\overline{HOLD}$ Low to Output High−Z	t_{HZ}	10		ns
$\overline{HOLD}$ High to Output Valid	t_{HV}		50	ns

Share Feedback
Your Opinion Matters

Downloaded from Arrow.com.

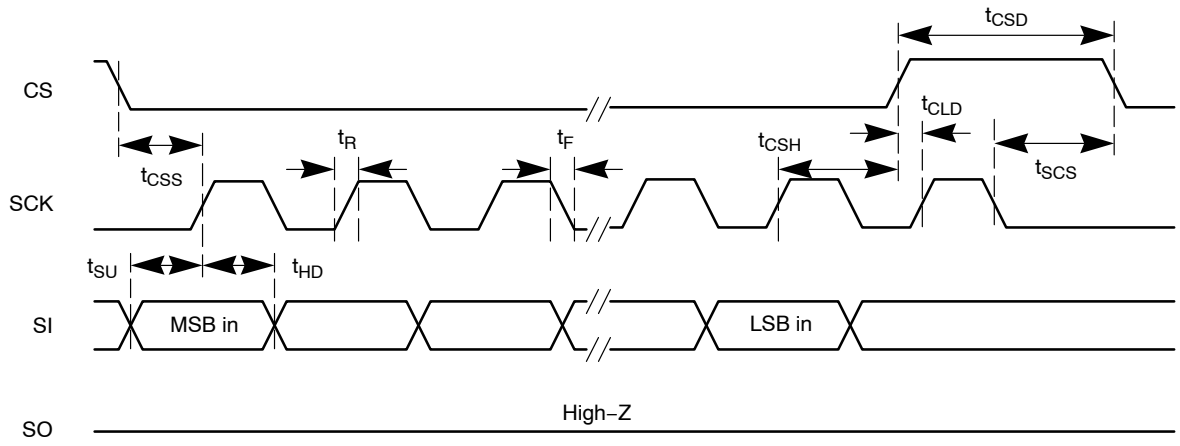

Figure 3. Serial Input Timing

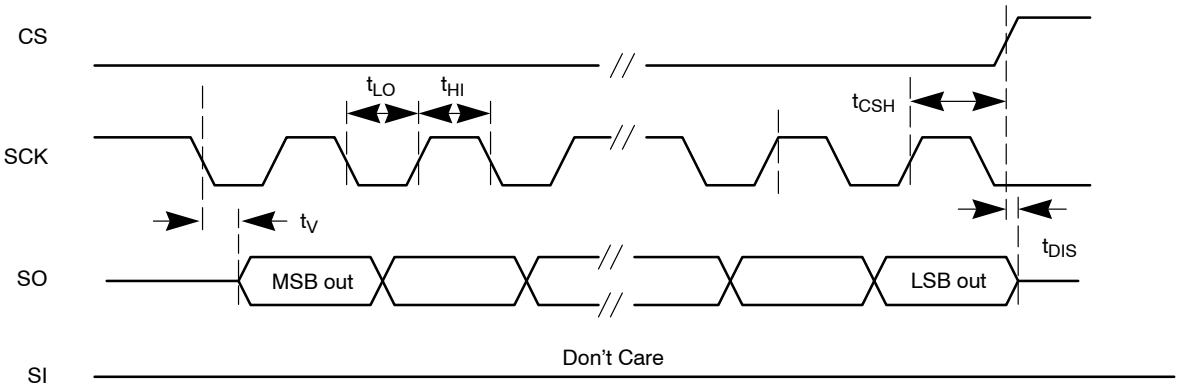

Figure 4. Serial Output Timing

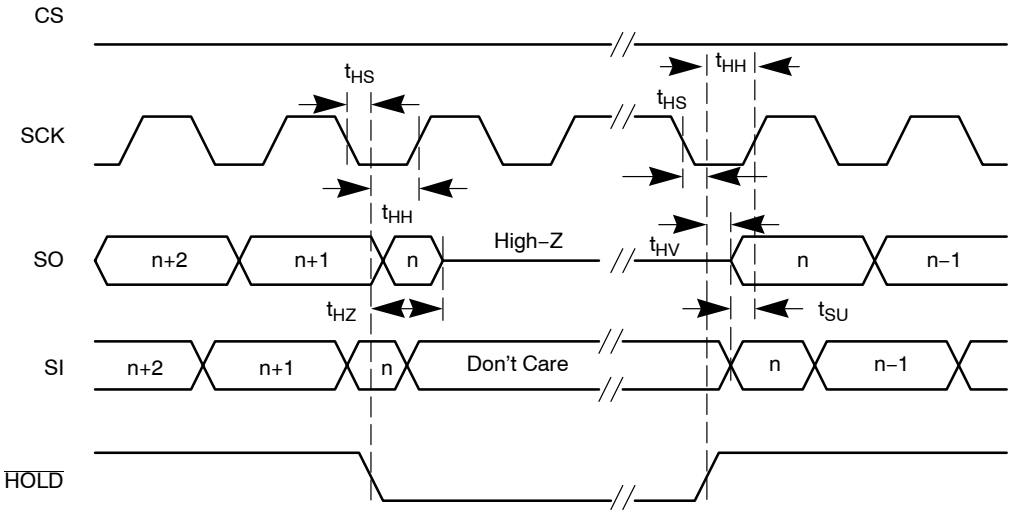

Figure 5. Hold Timing

Share Feedback
Your Opinion Matters

Downloaded from Arrow.com.

Table 8. CONTROL SIGNAL DESCRIPTIONS

Signal	Name	I/O	Description
$\overline{CS}$	Chip Select	I	A low level selects the device and a high level puts the device in standby mode. If $\overline{CS}$ is brought high during a program cycle, the cycle will complete and then the device will enter standby mode. When $\overline{CS}$ is high, SO is in high-Z. $\overline{CS}$ must be driven low after power-up prior to any sequence being started.
SCK	Serial Clock	I	Synchronizes all activities between the memory and controller. All incoming addresses, data and instructions are latched on the rising edge of SCK. Data out is updated on SO after the falling edge of SCK.
SI	Serial Data In	I	Receives instructions, addresses and data on the rising edge of SCK.
SO	Serial Data Out	O	Data is transferred out after the falling edge of SCK.
$\overline{HOLD}$	Hold	I	A high level is required for normal operation. Once the device is selected and a serial sequence is started, this input may be taken low to pause serial communication without resetting the serial sequence. The pin must be brought low while SCK is low for immediate use. If SCK is not low, the Hold function will not be invoked until the next SCK high to low transition. The device must remain selected during this sequence. SO is high−Z during the Hold time and SI and SCK are inputs are ignored. To resume operations, $\overline{HOLD}$ must be pulled high while the SCK pin is low. Lowering the $\overline{HOLD}$ input at any time will take to SO output to High-Z.

FUNCTIONAL OPERATION

Basic Operation

The 256 Kb serial SRAM is designed to interface directly with a standard Serial Peripheral Interface (SPI) common on many standard micro-controllers. It may also interface with other non-SPI ports by programming discrete I/O lines to operate the device.

The serial SRAM contains an 8−bit instruction register and is accessed via the SI pin. The $\overline{CS}$ pin must be low and the $\overline{HOLD}$ pin must be high for the entire operation. Data is sampled on the first rising edge of SCK after $\overline{CS}$ goes low. If the clock line is shared, the user can assert the $\overline{HOLD}$ input and place the device into a Hold mode. After releasing the $\overline{HOLD}$ pin, the operation will resume from the point where it was held.

The following table contains the possible instructions and formats. All instructions, addresses and data are transferred MSB first and LSB last.

Table 9. INSTRUCTION SET

Instruction	Instruction Format	Description
READ	0000 0011	Read data from memory starting at selected address
WRITE	0000 0010	Write data to memory starting at selected address
RDSR	0000 0101	Read status register
WRSR	0000 0001	Write status register

READ Operations

The serial SRAM READ is selected by enabling $\overline{CS}$ low. First, the 8-bit READ instruction is transmitted to the device followed by the 16-bit address with the MSB being a don't care. After the READ instruction and addresses are sent, the data stored at that address in memory is shifted out on the SO pin after the output valid time from the clock edge.

If operating in page mode, after the initial word of data is shifted out, the data stored at the next memory location on the page can be read sequentially by continuing to provide clock pulses. The internal address pointer is automatically incremented to the next higher address on the page after each word of data is read out. This can be continued for the entire page length of 32 words long. At the end of the page, the addresses pointer will be wrapped to the 0 word address within the page and the operation can be continuously looped over the 32 words of the same page.

If operating in burst mode, after the initial word of data is shifted out, the data stored at the next memory location can be read sequentially by continuing to provide clock pulses. The internal address pointer is automatically incremented to the next higher address after each word of data is read out. This can be continued for the entire array and when the highest address is reached (7FFFh), the address counter wraps to the address 0000h. This allows the burst read cycle to be continued indefinitely.

All READ operations are terminated by pulling $\overline{CS}$ high.

Share Feedback
Your Opinion Matters

Downloaded from Arrow.com.

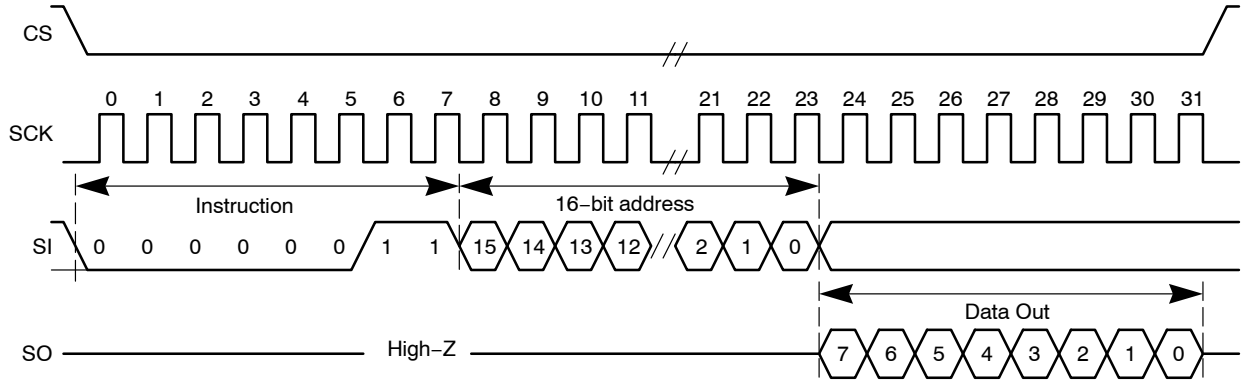

Figure 6. Word READ Sequence

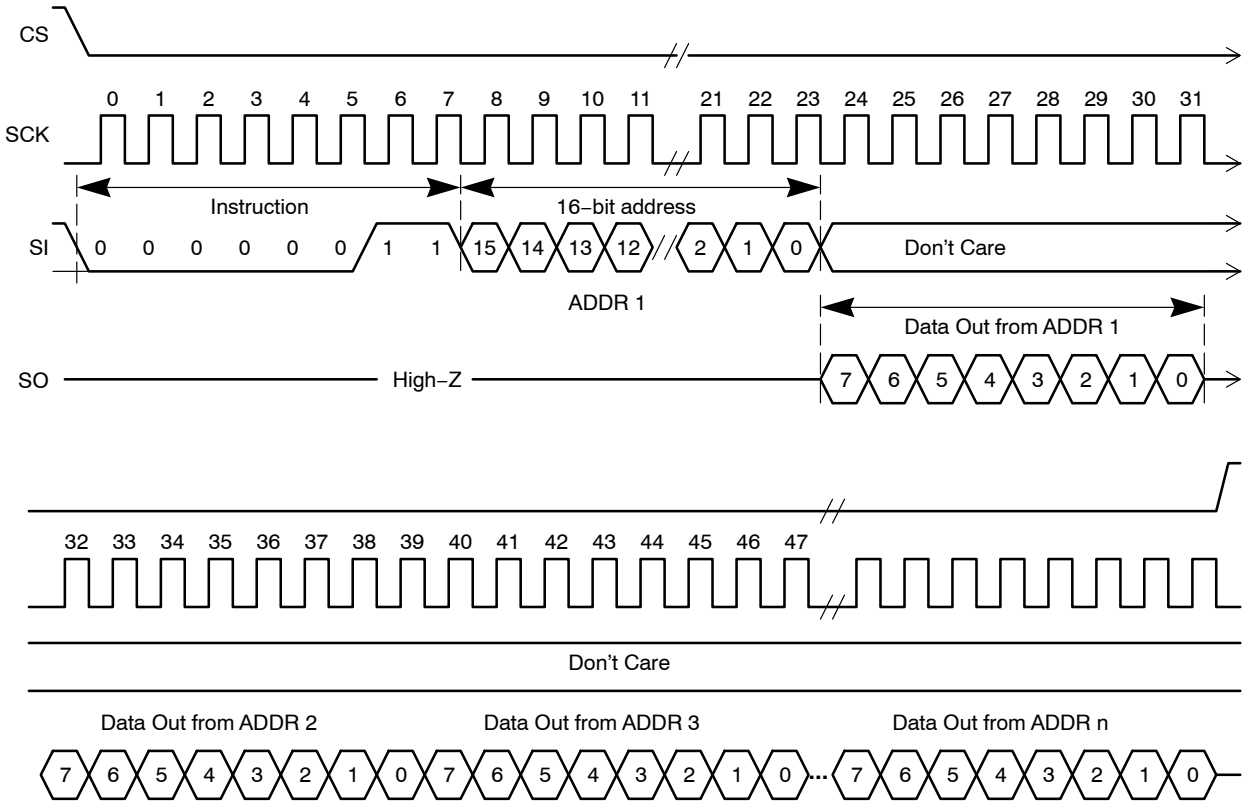

Figure 7. Page and Burst READ Sequence

Share Feedback
Your Opinion Matters

Downloaded from Arrow.com.

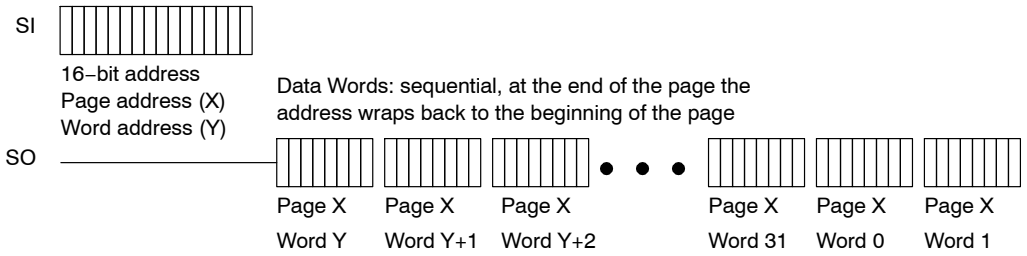

Figure 8. Page READ Sequence

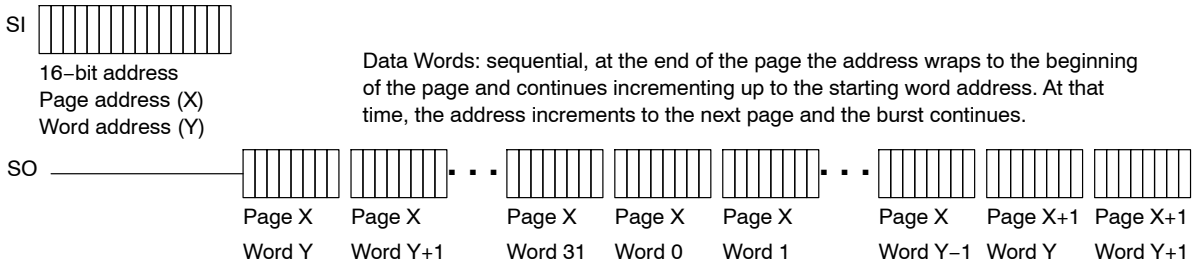

Figure 9. Burst READ Sequence

WRITE Operations

The serial SRAM WRITE is selected by enabling $\overline{CS}$ low. First, the 8-bit WRITE instruction is transmitted to the device followed by the 16-bit address with the MSB being a don't care. After the WRITE instruction and addresses are sent, the data to be stored in memory is shifted in on the SI pin.

If operating in page mode, after the initial word of data is shifted in, additional data words can be written as long as the address requested is sequential on the same page. Simply write the data on SI pin and continue to provide clock pulses. The internal address pointer is automatically incremented to the next higher address on the page after each word of data is written in. This can be continued for the entire page length of 32 words long. At the end of the page, the addresses pointer will be wrapped to the 0 word address within the page and the operation can be continuously looped over the 32 words of the same page. The new data will replace data already stored in the memory locations.

If operating in burst mode, after the initial word of data is shifted in, additional data words can be written to the next sequential memory locations by continuing to provide clock pulses. The internal address pointer is automatically incremented to the next higher address after each word of data is read out. This can be continued for the entire array and when the highest address is reached (7FFFh), the address counter wraps to the address 0000h. This allows the burst write cycle to be continued indefinitely. Again, the new data will replace data already stored in the memory locations.

All WRITE operations are terminated by pulling $\overline{CS}$ high.

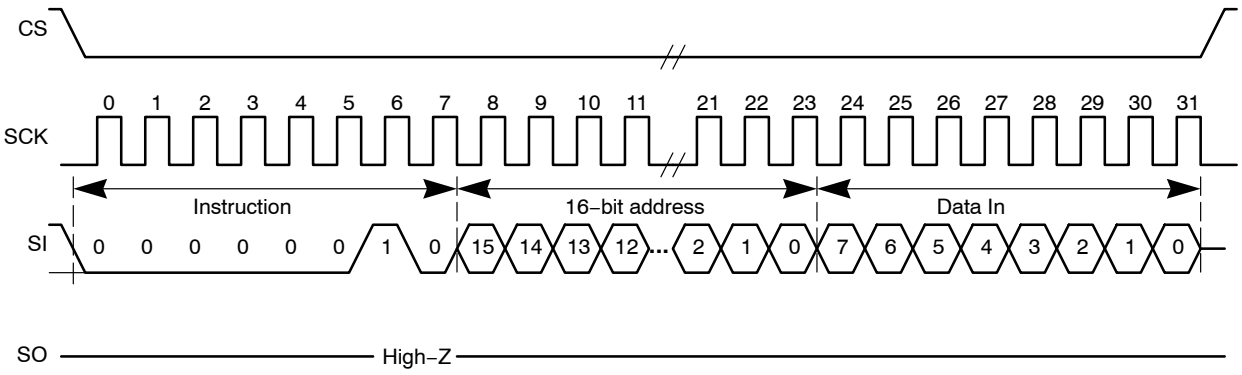

Figure 10. Word WRITE Sequence

Share Feedback
Your Opinion Matters

Downloaded from Arrow.com.

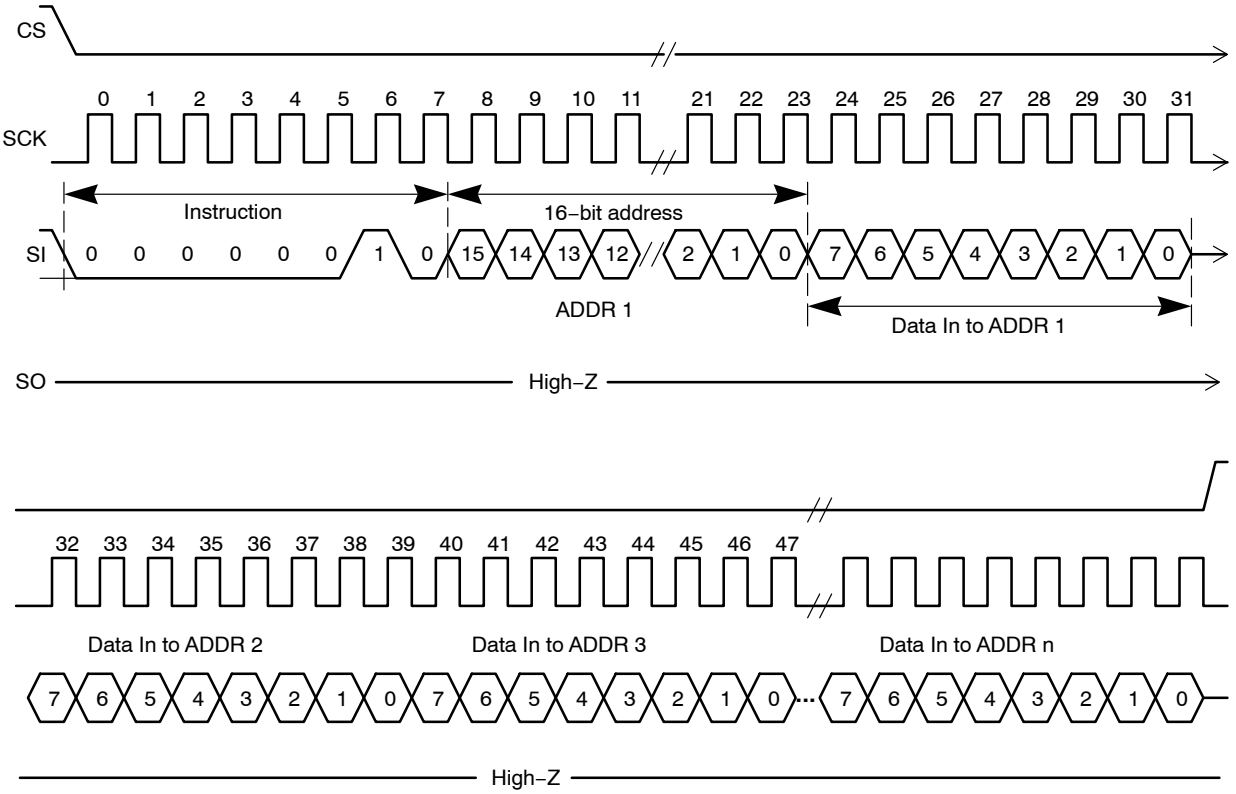

Figure 11. Page and Burst WRITE Sequence

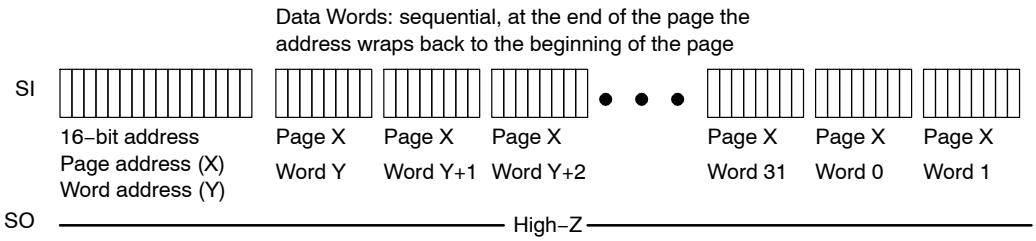

Figure 12. Page WRITE Sequence

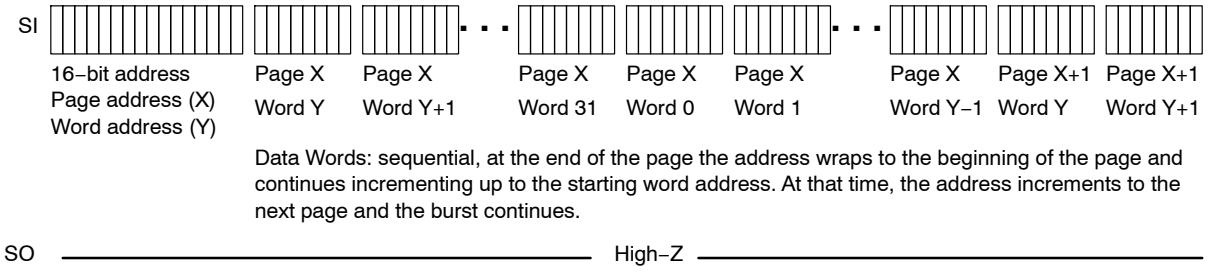

Figure 13. Burst WRITE Sequence

Share Feedback
Your Opinion Matters

Downloaded from Arrow.com.

WRITE Status Register Instruction (WRSR)

This instruction provides the ability to write the status register and select among several operating modes. Several of the register bits must be set to a low ‘0’ if any of the other bits are written. The timing sequence to write to the status register is shown below, followed by the organization of the status register.

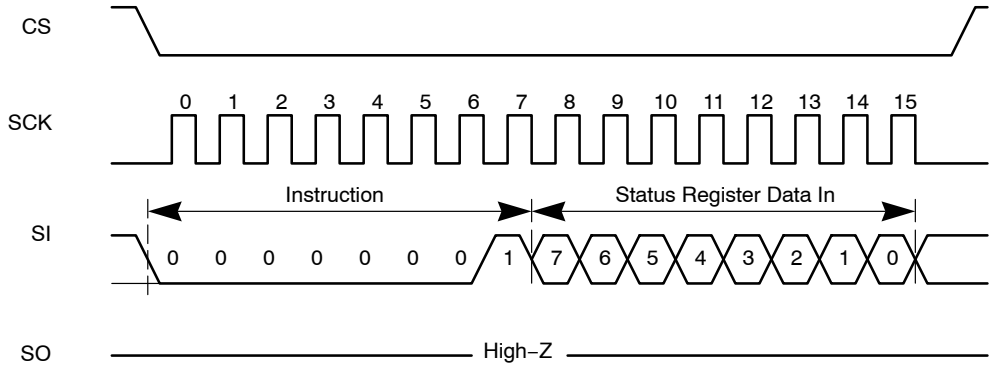

Figure 14. WRITE Status Register Sequence

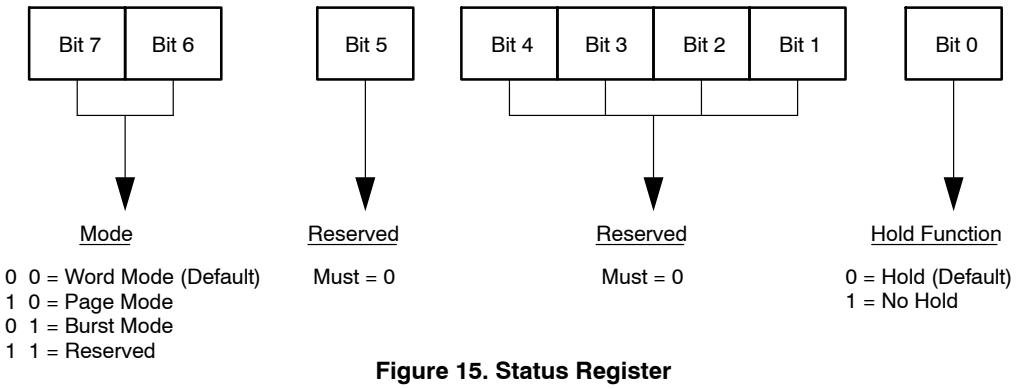

Figure 15. Status Register

READ Status Register Instruction (RDSR)

This instruction provides the ability to read the Status register. The register may be read at any time by performing the following timing sequence.

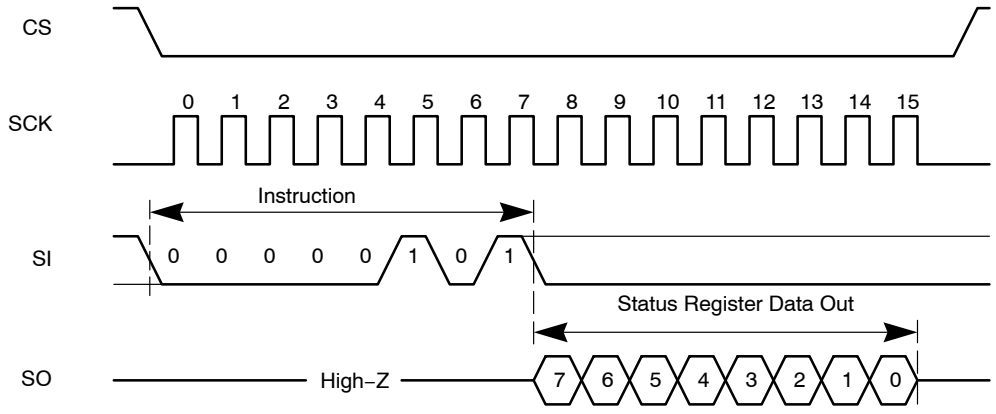

Figure 16. READ Status Register Instruction (RDSR)

Power-Up State

The serial SRAM enters a know state at power-up time. The device is in low−power standby state with $\overline{CS}$ = 1. A low level on $\overline{CS}$ is required to enter an active state.

Share Feedback
Your Opinion Matters

Downloaded from Arrow.com.

REVISION HISTORY

Revision	Description of Changes	Date
10	Initial Production Data Sheet version release document version release	6/12/2012
11	N25S818HAS21IT, N25S818HAT21IT OPN Marked as Discontinued + Rebranded the Data Sheet to **onsemi** format	10/21/2025

This document has undergone updates prior to the inclusion of this revision history table. The changes tracked here only reflect updates made on the noted approval dates.

Share Feedback
Your Opinion Matters

Downloaded from Arrow.com.



SCALE 1:1

SOIC−8
CASE 751AZ
ISSUE B

DATE 18 MAY 2015

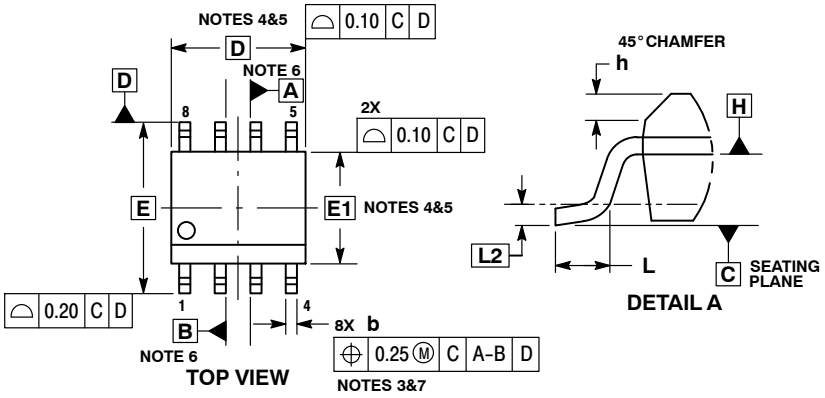

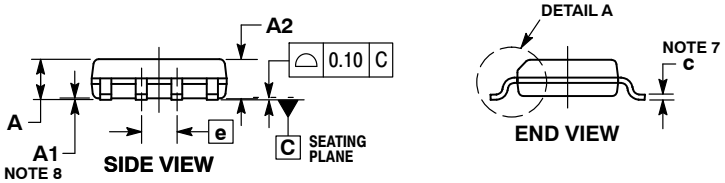

NOTES:
1. DIMENSIONING AND TOLERANCING PER ASME Y14.5M, 1994.
2. CONTROLLING DIMENSION: MILLIMETERS.
3. DIMENSION b DOES NOT INCLUDE DAMBAR PROTRUSION. ALLOWABLE PROTRUSION SHALL BE 0.004 mm IN EXCESS OF MAXIMUM MATERIAL CONDITION.
4. DIMENSION D DOES NOT INCLUDE MOLD FLASH, PROTRUSIONS OR GATE BURRS. MOLD FLASH, PROTRUSIONS OR GATE BURRS SHALL NOT EXCEED 0.006 mm PER SIDE. DIMENSION E1 DOES NOT INCLUDE INTERLEAD FLASH OR PROTRUSION. INTERLEAD FLASH OR PROTRUSION SHALL NOT EXCEED 0.010 mm PER SIDE.
5. THE PACKAGE TOP MAY BE SMALLER THAN THE PACKAGE BOTTOM. DIMENSIONS D AND E1 ARE DETERMINED AT THE OUTERMOST EXTREMES OF THE PLASTIC BODY AT DATUM H.
6. DIMENSIONS A AND B ARE TO BE DETERMINED AT DATUM H.
7. DIMENSIONS b AND c APPLY TO THE FLAT SECTION OF THE LEAD BETWEEN 0.10 TO 0.25 FROM THE LEAD TIP.
8. A1 IS DEFINED AS THE VERTICAL DISTANCE FROM THE SEATING PLANE TO THE LOWEST POINT ON THE PACKAGE BODY.

	MILLIMETERS	
DIM	MIN	MAX
A	---	1.75
A1	0.10	0.25
A2	1.25	---
b	0.31	0.51
c	0.10	0.25
D	4.90 BSC	
E	6.00 BSC	
E1	3.90 BSC	
e	1.27 BSC	
h	0.25	0.41
L	0.40	1.27
L2	0.25 BSC	

RECOMMENDED SOLDERING FOOTPRINT*

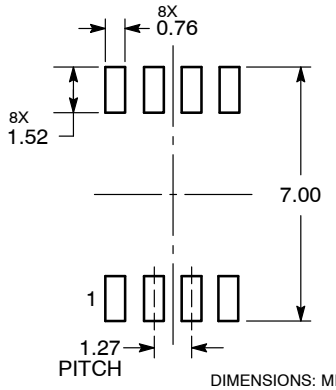

DIMENSIONS: MILLIMETERS

*For additional information on our Pb−Free strategy and soldering details, please download the **onsemi** Soldering and Mounting Techniques Reference Manual, SOLDERRM/D.

GENERIC MARKING DIAGRAM*

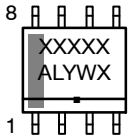

XXXXX = Specific Device Code
A = Assembly Location
L = Wafer Lot
Y = Year
W = Work Week
▪ = Pb−Free Package

*This information is generic. Please refer to device data sheet for actual part marking. Pb−Free indicator, “G” or microdot “▪”, may or may not be present. Some products may not follow the Generic Marking.

DOCUMENT NUMBER:	**98AON34918E**	Electronic versions are uncontrolled except when accessed directly from the Document Repository. Printed versions are uncontrolled except when stamped “CONTROLLED COPY” in red.
DESCRIPTION:	**SOIC−8**	**PAGE 1 OF 1**

onsemi and onsemi are trademarks of Semiconductor Components Industries, LLC dba **onsemi** or its subsidiaries in the United States and/or other countries. **onsemi** reserves the right to make changes without further notice to any products herein. **onsemi** makes no warranty, representation or guarantee regarding the suitability of its products for any particular purpose, nor does **onsemi** assume any liability arising out of the application or use of any product or circuit, and specifically disclaims any and all liability, including without limitation special, consequential or incidental damages. **onsemi** does not convey any license under its patent rights nor the rights of others.

Downloaded from Arrow.com.

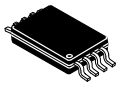

SCALE 2:1

TSSOP−8 3.00x4.00x0.90, 0.65P
CASE 948S
ISSUE D

DATE 24 OCT 2025

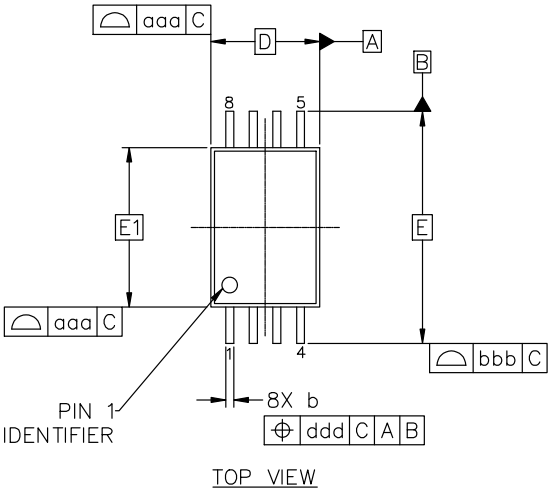

TOP VIEW

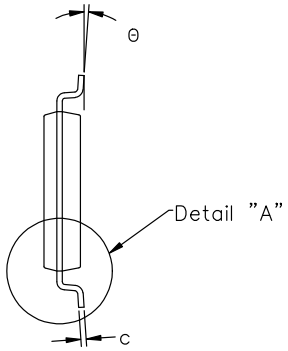

FRONT VIEW

MILLIMETERS			
DIM	MIN	NOM	MAX
A	0.90	1.00	1.10
A1	0.05	0.10	0.15
A2	0.80	0.90	1.00
b	0.19	0.25	0.30
c	0.09	0.15	0.20
D	3.00 BSC		
E	6.40 BSC		
E1	4.40 BSC		
L	0.50	0.60	0.70
L1	1.00 REF		
L2	0.25 BSC		
θ	0°	4°	8°
TOLERANCE FORM & POSITION			
aaa	0.10		
bbb	0.20		
ccc	0.10		
ddd	0.10		
eee	0.05		

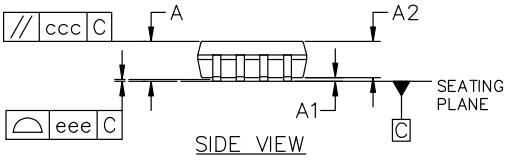

SIDE VIEW

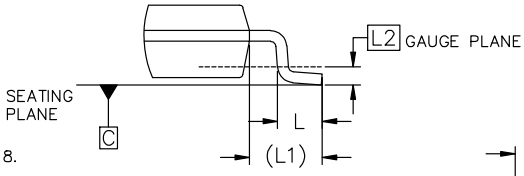

DETAIL "A"
SCALE 2:1

NOTES:
1. DIMENSIONING AND TOLERANCING AS PER ASME Y14.5M, 2018.
2. CONTROLLING DIMENSION: MILLIMETERS.
3. DIMENSION "D" DOES NOT INCLUDE MOLD FLASH, PROTRUSIONS OR GATE BURRS. MOLD FLASH, PROTRUSION OR GATE BURRS SHALL NOT EXCEED 0.15 PER SIDE.
4. DIMENSION "E1" DOES NOT INCLUDE INTERLEAD FLASH OR PROTRUSION. INTERLEAD FLASH OR PROTRUSION SHALL NOT EXCEED 0.25 PER SIDE.
5. DIMENSION "b" DOES NOT INCLUDE DAMBAR PROTRUSION. ALLOWABLE DAMBAR PROTRUSION SHALL BE 0.08mm TOTAL IN EXCESS OF THE "b" DIMENSION AT MAXIMUM MATERIAL CONDITION. DAMBAR CANNOT BE LOCATED ON THE LOWER RADIUS OF THE FOOT. MINIMUM SPACE BETWEEN PROTRUSION AND ADJACENT LEAD IS 0.07mm.

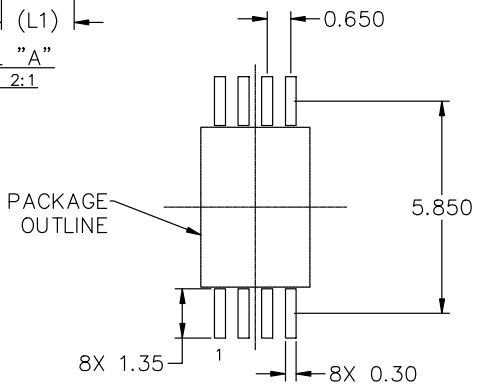

RECOMMENDED MOUNTING FOOTPRINT

*For additional information on our Pb−Free strategy and soldering details, please download the onsemi Soldering and Mounting Techniques Reference Manual, SOLDERRM/D.

GENERIC MARKING DIAGRAM*



XXX = Specific Device Code
A = Assembly Location
Y = Year
WW = Work Week
▪ = Pb−Free Package

*This information is generic. Please refer to device data sheet for actual part marking. Pb−Free indicator, "G" or microdot "▪", may or may not be present. Some products may not follow the Generic Marking.

DOCUMENT NUMBER:	**98AON00697D**	Electronic versions are uncontrolled except when accessed directly from the Document Repository. Printed versions are uncontrolled except when stamped "CONTROLLED COPY" in red.
DESCRIPTION:	**TSSOP−8 3.00x4.00x0.90, 0.65P**	**PAGE 1 OF 1**

onsemi and onsemi are trademarks of Semiconductor Components Industries, LLC dba **onsemi** or its subsidiaries in the United States and/or other countries. **onsemi** reserves the right to make changes without further notice to any products herein. **onsemi** makes no warranty, representation or guarantee regarding the suitability of its products for any particular purpose, nor does **onsemi** assume any liability arising out of the application or use of any product or circuit, and specifically disclaims any and all liability, including without limitation special, consequential or incidental damages. **onsemi** does not convey any license under its patent rights nor the rights of others.

Downloaded from Arrow.com.

onsemi, ONSEMI , and other names, marks, and brands are registered and/or common law trademarks of Semiconductor Components Industries, LLC dba "**onsemi**" or its affiliates and/or subsidiaries in the United States and/or other countries. **onsemi** owns the rights to a number of patents, trademarks, copyrights, trade secrets, and other intellectual property. A listing of **onsemi**'s product/patent coverage may be accessed at www.onsemi.com/site/pdf/Patent−Marking.pdf. **onsemi** reserves the right to make changes at any time to any products or information herein, without notice. The information herein is provided "as−is" and **onsemi** makes no warranty, representation or guarantee regarding the accuracy of the information, product features, availability, functionality, or suitability of its products for any particular purpose, nor does **onsemi** assume any liability arising out of the application or use of any product or circuit, and specifically disclaims any and all liability, including without limitation special, consequential or incidental damages. Buyer is responsible for its products and applications using **onsemi** products, including compliance with all laws, regulations and safety requirements or standards, regardless of any support or applications information provided by **onsemi**. "Typical" parameters which may be provided in **onsemi** data sheets and/or specifications can and do vary in different applications and actual performance may vary over time. All operating parameters, including "Typicals" must be validated for each customer application by customer's technical experts. **onsemi** does not convey any license under any of its intellectual property rights nor the rights of others. **onsemi** products are not designed, intended, or authorized for use as a critical component in life support systems or any FDA Class 3 medical devices or medical devices with a same or similar classification in a foreign jurisdiction or any devices intended for implantation in the human body. Should Buyer purchase or use **onsemi** products for any such unintended or unauthorized application, Buyer shall indemnify and hold **onsemi** and its officers, employees, subsidiaries, affiliates, and distributors harmless against all claims, costs, damages, and expenses, and reasonable attorney fees arising out of, directly or indirectly, any claim of personal injury or death associated with such unintended or unauthorized use, even if such claim alleges that **onsemi** was negligent regarding the design or manufacture of the part. **onsemi** is an Equal Opportunity/Affirmative Action Employer. This literature is subject to all applicable copyright laws and is not for resale in any manner.

ADDITIONAL INFORMATION

TECHNICAL PUBLICATIONS:
Technical Library: www.onsemi.com/design/resources/technical−documentation
onsemi Website: www.onsemi.com

ONLINE SUPPORT: www.onsemi.com/support
For additional information, please contact your local Sales Representative at www.onsemi.com/support/sales

◊

Downloaded from Arrow.com.