THIS DRAWING IS UNPUBLISHED. RELEASED FOR PUBLICATION -,- .
© COPYRIGHT - By - ALL RIGHTS RESERVED.

LOC	DIST
GP	00

REVISIONS

P	LTR	DESCRIPTION	DATE	DWN	APVD
	B	REVISED PER ECO-12-015754	30AUG2012	CJV	SLB

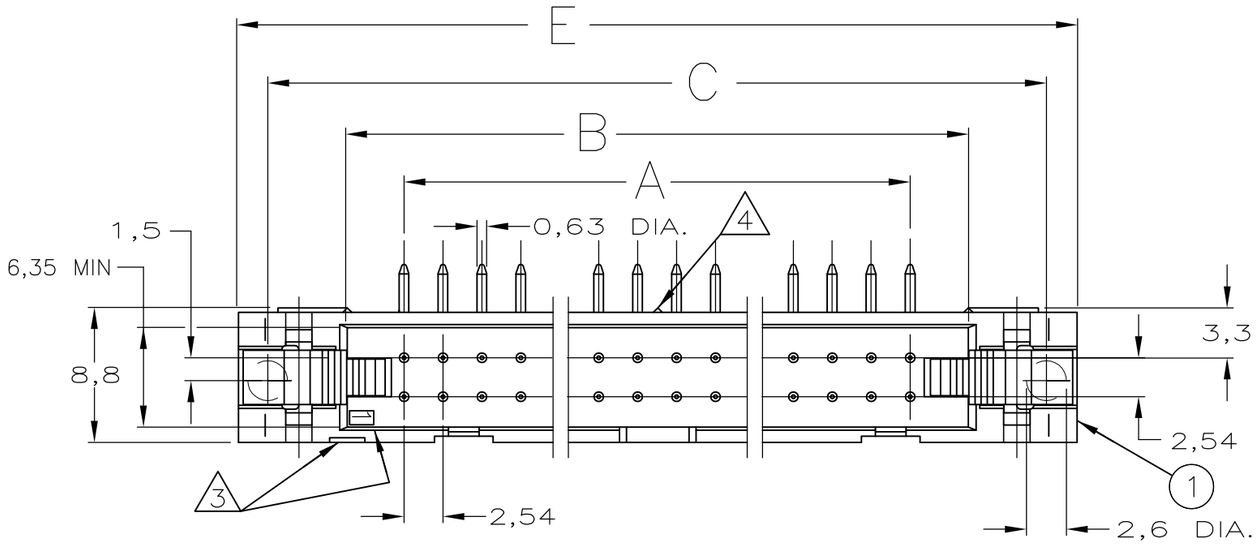

NOTES

1. SNAP-IN POLARIZERS PN 927636-2 OR 927637-2 CAN BE APPLIED.
2. THERE IS NO WINDOW FOR SNAP-IN POLARIZERS AT THIS END IN 10 AND 14 POS HEADERS.
3. INDICATION OF FIRST POSITION.
4. THERE IS NO CENTER STAND-OFF IN 10-26 POS HEADERS.

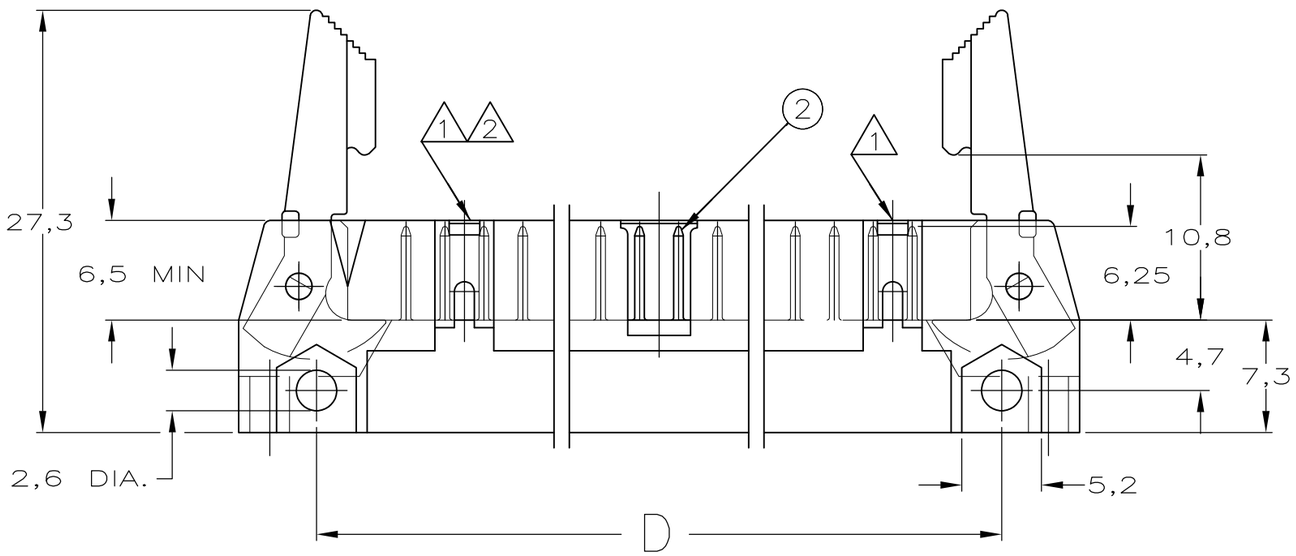

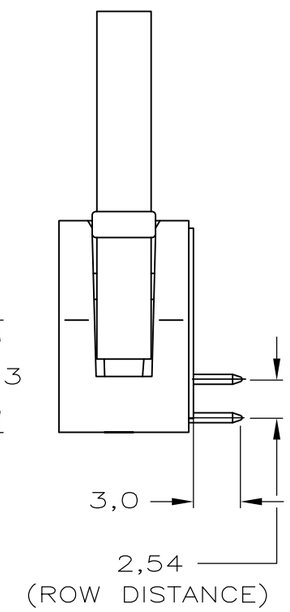

RECOMMENDED PCB-HOLE PATTERN

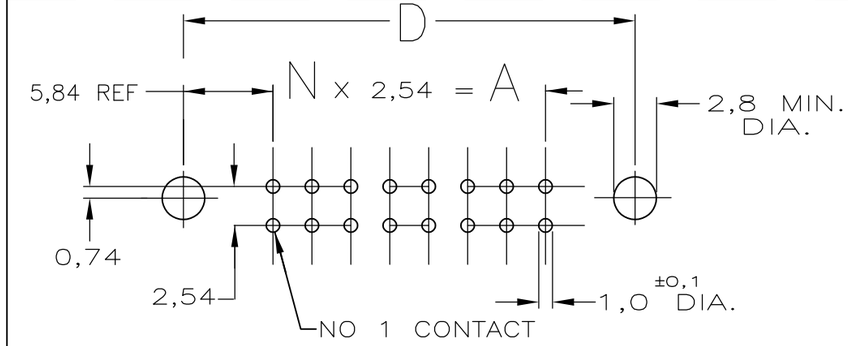

2	PIN-CONTACT	BRASS	MATING SIDE: 0,8µm AU OR 0,8µm AMP DURAGOLD® / OVER 1,27µm NI SOLDER SIDE: MIN. 3,0µm SN OVER 1,27µm NI
1	HOUSING	GLASS FILLED POLYESTER	BLACK

E	D	C	B	A	NO OF POSITIONS	PART NUMBER
100,6	90,4	96,5	86,4	78,7	64	6-828584-4
95,5	85,3	91,4	81,3	73,7	60	6-828584-0
82,8	72,6	78,7	68,6	61,0	50	5-828584-0
70,1	59,9	66,0	55,9	48,3	40	4-828584-0
62,5	52,3	58,4	48,3	40,6	34	3-828584-4
52,3	42,2	48,3	38,1	30,5	26	2-828584-6
44,7	34,5	40,6	30,5	22,9	20	2-828584-0
39,6	29,5	35,6	25,4	17,8	16	1-828584-6
37,1	26,9	33,0	22,9	15,2	14	1-828584-4
32,0	21,8	27,9	17,8	10,2	10	1-828584-0

THIS DRAWING IS A CONTROLLED DOCUMENT.
DIMENSIONING AND TOLERANCING PER ASME Y14.5M-2009

DIMENSIONS: mm

TOLERANCES UNLESS OTHERWISE SPECIFIED:
0 PLC ± -
1 PLC ± -
2 PLC ± -
3 PLC ± -
4 PLC ± -
ANGLES ± -

MATERIAL -
FINISH -

DWN J.v.LIEMPT 29-11-93
CHK R.VERSTIJNEN -
APVD L.v.SOEST -
PRODUCT SPEC —
APPLICATION SPEC —
WEIGHT —

TE Connectivity

NAME AMP-LATCH HEADER 90°

VERSION

SIZE	CAGE CODE	DRAWING NO	RESTRICTED TO
A3	00779	C-828584	—

CUSTOMER DRAWING

SCALE	SHEET	REV
—	1 OF 1	B

OBSOLETE
NOT the LATEST REVISION

Downloaded from Arrow.com.