PRODUCT CATALOG

HIROSE ELECTRIC CO.,LTD.

FH63S Series

0.5mm Pitch, Height 2.8mm Lower Contact, One-Action Lock, 2-point Contact, 125℃ Compatible, FPC/FFC/Shielded FFC Connector

FH™

OneAction Flip-Lock Pioneer Hirose

Robust

One Action

Automotive

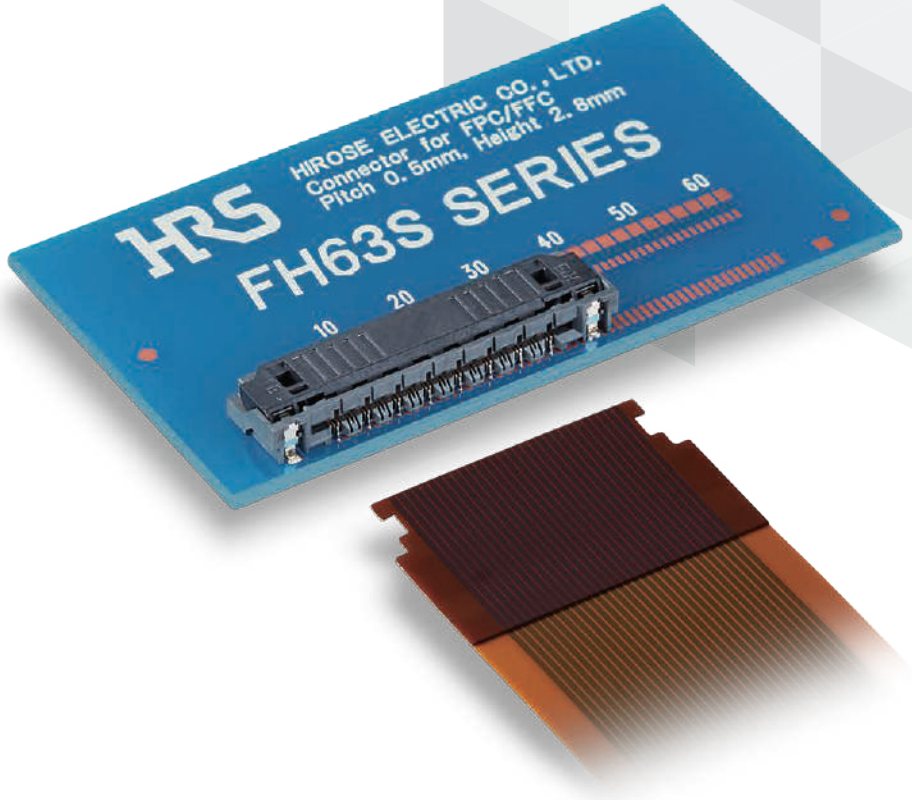

Product Page
https://www.hirose.com/en/product/series/FH63S

Jun. 2023

Jan.1.2024 Copyright 2024 HIROSE ELECTRIC CO., LTD. All Rights Reserved.

Downloaded from Arrow.com.

Feautures

1. Automatic one action locking design

One action locking by simply inserting FPC after mounting contributes to enhanced workability. (Remove FPC by operating lock to release.)
Lock lever operation is not required when mating the FPC. Insertion can be performed using one hand.
The FH63S Series's locking design contributes to reducing assembly time. The lock lever is not damaged by operation and incomplete mating resulting from lock lever operation does not occur.

Dimension Diagram : 30pos.

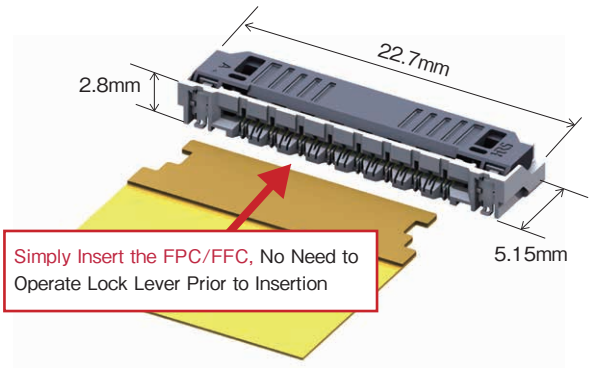

2. Dust prevention

High contact reliability by independent spring two-point contact design that prevents contact failure by dust.

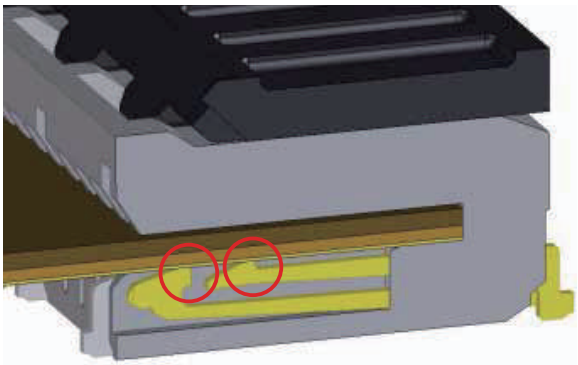

3. Supports FPC/FFC/Shielded FFC

FH63S allows you to choose from FPC, FFC and shielded FFC.
Shielded FPC enables EMI prevention.

Supports FPC/FFC/Shielded FFC

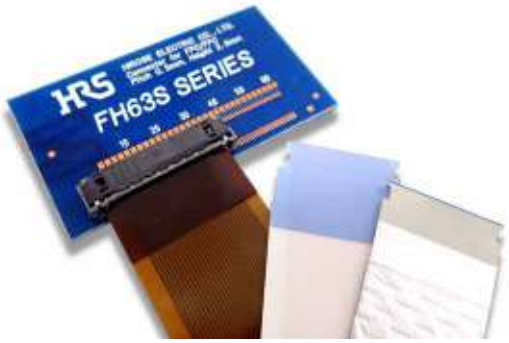

FPC FFC Shielded FFC

Shield FFC Supports EMI Prevention

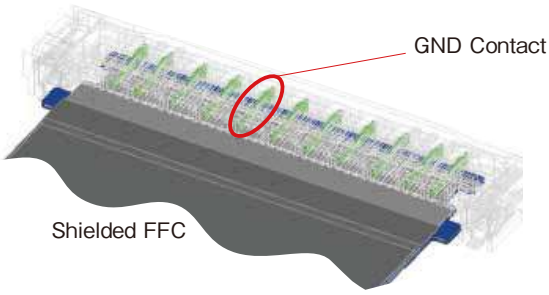

GND Contact and FFC GND Plate Contact at Multiple Points.

Jan.1.2024 Copyright 2024 HIROSE ELECTRIC CO., LTD. All Rights Reserved.

Downloaded from Arrow.com.

4. High FPC retention force

After the single FPC/FFC insertion action, the connector locks automatically. The lock lever holds the notches on both sides of the FPC for high FPC retention force even at small pin counts.

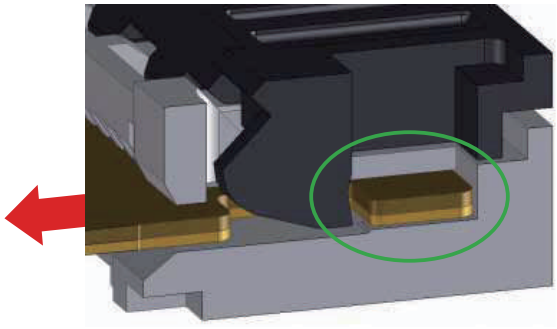

Robust Lock Firmly Retains FPC/FFC.

5. FPC/FFC mating detection

The position of the notches on both sides of the FPC can be checked from above after FPC/FFC insertion, preventing incomplete insertion.

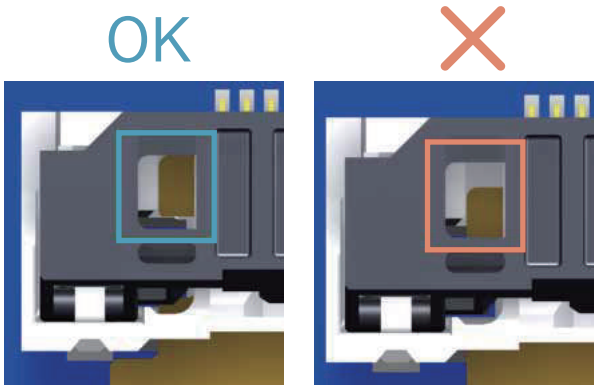

Mated Condition (Correct Position)

Incomplete Insertion (Incorrect Position)

FPC/FFC Can be Checked from Above After Mating

6. Environmental compatibility

Halogen free

*As defined by IEC 61249-2-21.
Br : 900ppm Max, Cl : 900ppm Max, Br+Cl : 1,500ppm Max.

Jan.1.2024 Copyright 2024 HIROSE ELECTRIC CO., LTD. All Rights Reserved.

Downloaded from Arrow.com.

Product Specifications

Rated Current	0.5A	Operating Temperature (Note 1)	-55 to +125℃
Rated Voltage	50V AC/DC	Operating Humidity Range	RH 90% Max. (No Condensation)
		Storage Temperature Range (Note 2)	-10 to +60℃
		Storage Humidity Range	RH 90% Max. (No Condensation)

Adaptive FPC Contact Specifications	Thickness : = 0.30 ± 0.05mm Signal Layout : Gold Plating, GND Plate : Tin Plating

Item	Specification	Conditions
Insulation Resistance	500MΩ Min.	100V DC
Withstanding Voltage	No flashover or insulation breakdown	150V AC rms per 1 min.
Contact Resistance	100mΩ Max. Including FPC/FFC conductor resistance	1mA AC
Mating Durability (Insertion / Withdrawal)	Contact Resistance : 100mΩ Max. No damage, cracks, or parts dislocation	10 cycles
Vibration	No electrical discontinuity of 1μs or more Contact resistance : 100mΩ Max. No damage, cracks, or parts dislocation	Frequency : 10 to 55Hz, single amplitude of 0.75mm, 10 cycles in each of the 3 directions
Shock	No electrical discontinuity of 1μs or more Contact resistance : 100mΩ Max. No damage, cracks, or parts dislocation	Acceleration of 981m/s^2, duration of 6 ms, sine half-wave waveform, 3 cycles in each of the 3 axes
Damp Heat (Steady State)	Contact resistance : 100mΩ Max. Insulation resistance : 50MΩ Min. No damage, cracks, or parts dislocation	96 hours at temperature of +60℃ and humidity of 90 to 95%
Temperature Cycle	Contact resistance : 100mΩ Max. Insulation resistance : 50MΩ Min. No damage, cracks, or parts dislocation	Temperature : -40 → +15 to +35 → +125 → +15 to +35℃ Time : 30 → 2 to 3 → 30 → 2 to 3 (Minutes) 5 cycles
Soldering Heat Resistance	No deformation of components affecting performance	Reflow : Recommended Temperature Profile Manual Soldering : 350 ± 10℃ for 5 seconds

Note 1 : Includes temperature rise due to current flow. The heat resistant when using FFC is 105℃. When the heat resistant temperature is less than 125℃ for FPC and 105℃ for FFC, the heat resistant temperature of the FPC/FFC is applied.
Note 2 : The term "storage" refers to products stored for long period of time prior to mounting and use. Operating temperature and humidity range are applicable to the non-energized state after board mounting.

Jan.1.2024 Copyright 2024 HIROSE ELECTRIC CO., LTD. All Rights Reserved.

Downloaded from Arrow.com.

Materials / Finish

Part	Materials	Color / Finish	UL Standard
Insulator	LCP	Gray	UL94V-0
		Black	
Signal Contact	Copper Alloy	Nickel Barrier Gold Plating	-
Ground Contact		Pure Tin Reflow Plating	-
Retention Tabs	SUS	Pure Tin Reflow Plating	-

Product Number Structure

FH63S - 30S - 0.5 SH (##)

❶ ❷ ❸ ❹ ❺

❶ Series Name	FH63S	❹ Termination Type	SH : SMT
❷ No. of Pos.	10 to 40	❺ Specifications	Blank : Standard 3,500pcs per reel (05) : 2,000pcs per reel (99) : 500pcs per reel (For trial production)
❸ Contact Pitch	0.5mm		

Jan.1.2024 Copyright 2024 HIROSE ELECTRIC CO., LTD. All Rights Reserved.

Downloaded from Arrow.com.

Connector Dimensions

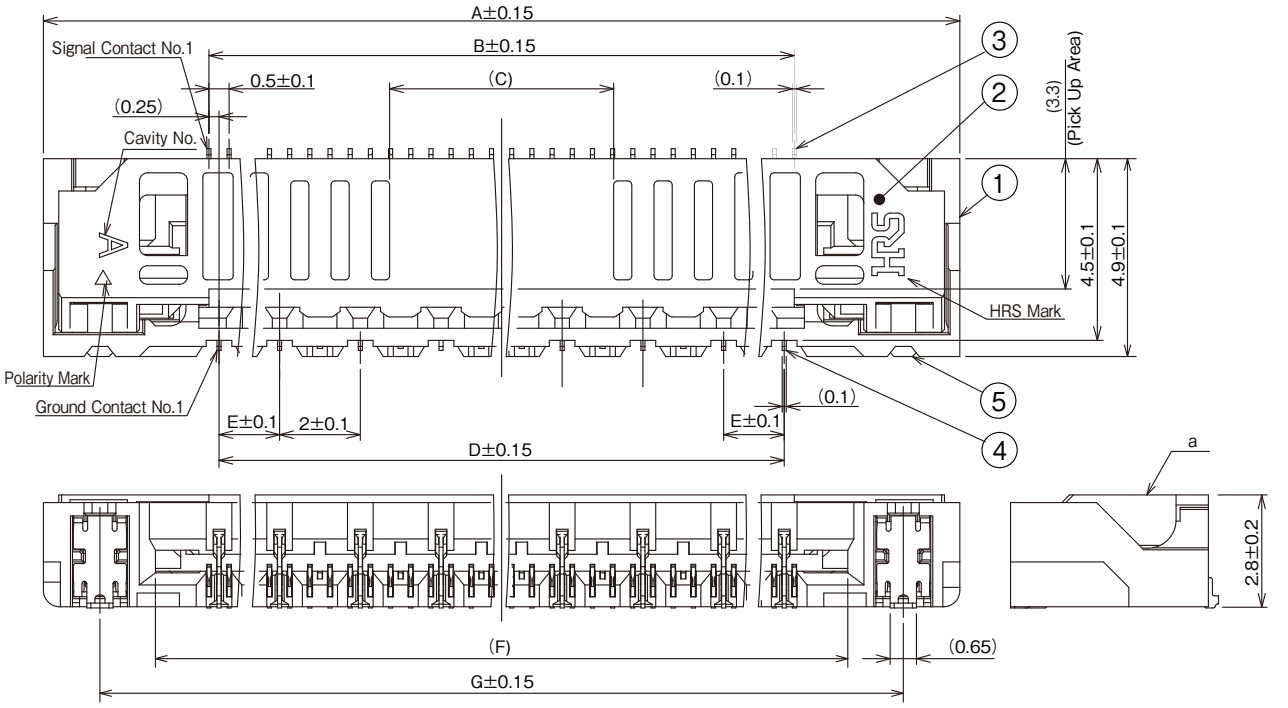

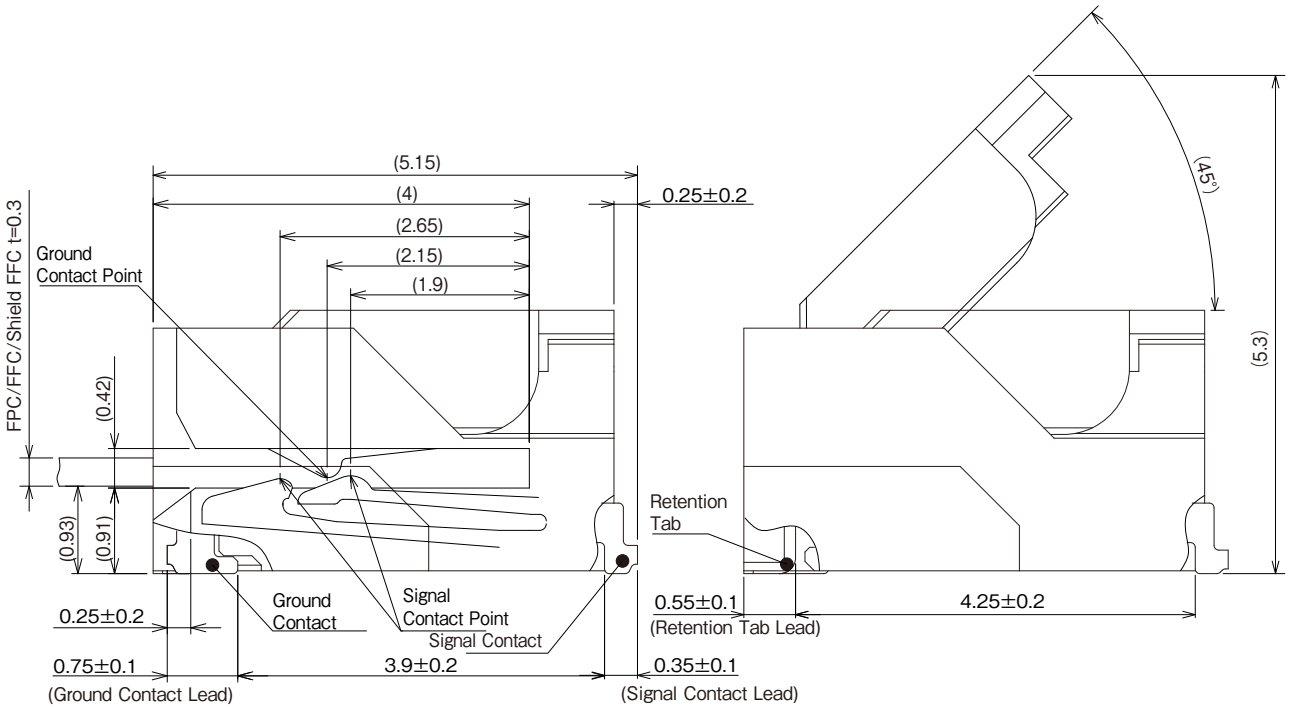

Note 1 : The dimension in parentheses are for reference.
Note 2 : The coplanarity of the contact and retention tab lead should be 0.1mm Max.
Note 3 : Packaged in tape and reel. Check the packaging specifications for details.
Note 4 : Sink holes or slits may be added for improvements.
Note 5 : Black spots may appear on the mold however this does not represent a quality issue.
Note 6 : This product is halogen-free.
(Br : 900ppm maximum, Cl : 900ppm maximum, Cl + Br combined : 1,500ppm maximum)

Jan.1.2024 Copyright 2024 HIROSE ELECTRIC CO., LTD. All Rights Reserved.

Downloaded from Arrow.com.

Unit : mm

Part No.	HRS No.	No. of Pos.	A	B	C	D	E	F	G	Purchase Unit (##) : (00)	Purchase Unit (##) : (05)	Purchase Unit (##) : (99)
FH63S-10S-0.5SH(##)	CL0580-4414-0-##	10	12.7	4.5	5.55	4.0	2.0	7.15	9.9	3,500pcs per reel	-	500pcs per reel
FH63S-20S-0.5SH(##)	CL0580-4419-0-##	20	17.7	9.5	6.55	9.0	1.5	12.15	14.9			
FH63S-30S-0.5SH(##)	CL0580-4415-0-##	30	22.7	14.5	5.55	14.0	2.0	17.15	19.9			
FH63S-40S-0.5SH(##)	CL0580-4416-0-##	40	27.7	19.5	10.55	19.0	1.5	22.15	24.9			
FH63S-50S-0.5SH(##)	Under Planning (Note)	50	32.7	24.5	15.55	24.0	2.0	27.15	29.9	-	2,000pcs per reel	
FH63S-60S-0.5SH(##)	Under Planning (Note)	60	37.7	29.5	20.55	29.0	1.5	32.15	34.9			

Note : Products without HRS No. are currently being planned for development. Please contact a Hirose representative regarding questions on pin count variation development.

Jan.1.2024 Copyright 2024 HIROSE ELECTRIC CO., LTD. All Rights Reserved.

Downloaded from Arrow.com.

Recommended PCB Mounting Pattern, Metal Mask Dimensions

● Recommended PCB Mounting Pattern

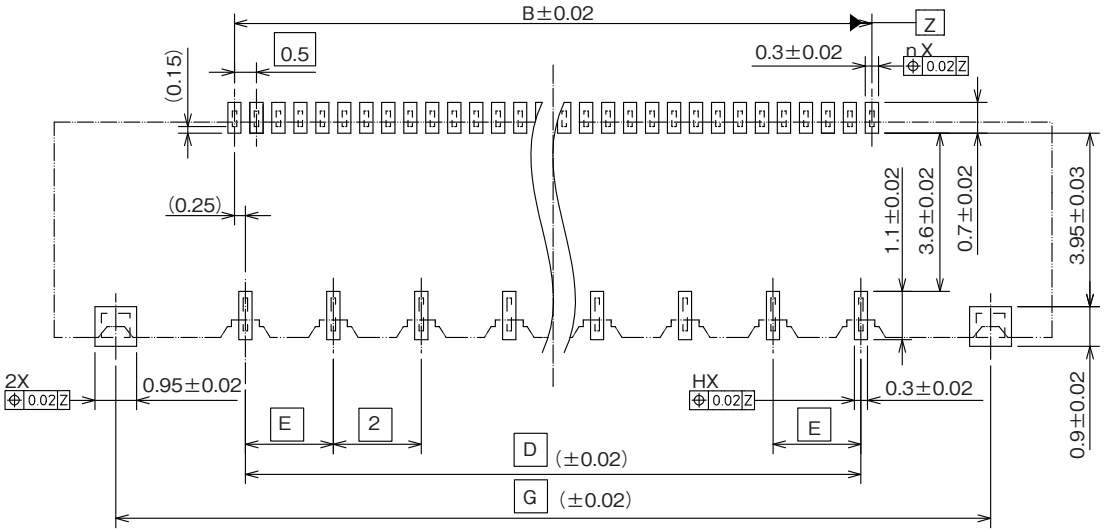

● Recommended Metal Mask Dimensions

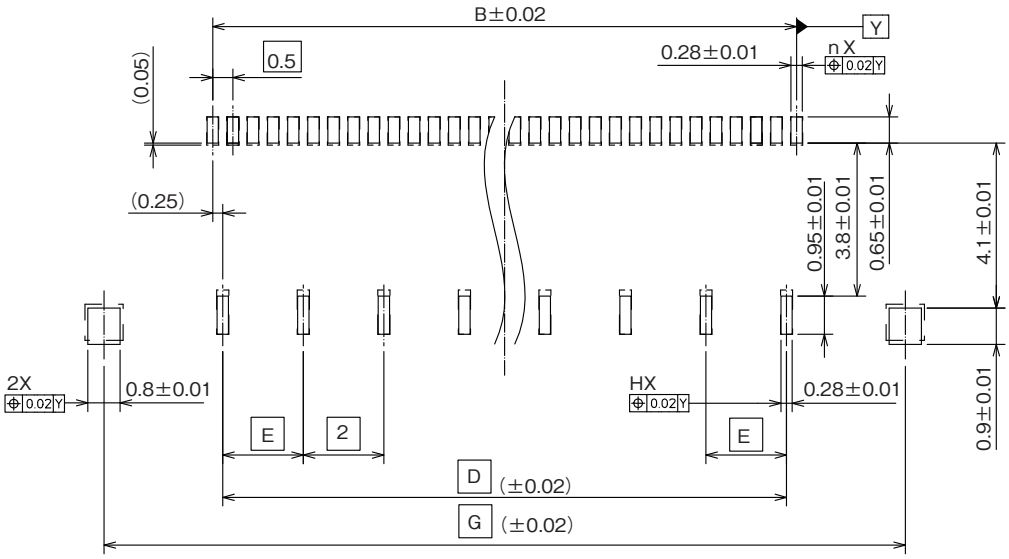

Recommended PCB Mounting Thickness : 0.12
Note : 'n' indicates the number of positions.

● Recommended PCB Mounting Pattern, Metal Mask Dimensions and FPC/FFC Dimensions Table

Unit : mm

Part No.	HRS No.	No. of Pos.	B	D	E	G	H
FH63S-10S-0.5SH(##)	CL0580-4414-0-##	10	4.5	4.0	2.0	9.9	3.0
FH63S-20S-0.5SH(##)	CL0580-4419-0-##	20	9.5	9.0	1.5	14.9	6.0
FH63S-30S-0.5SH(##)	CL0580-4415-0-##	30	14.5	14.0	2.0	19.9	8.0
FH63S-40S-0.5SH(##)	CL0580-4416-0-##	40	19.5	19.0	1.5	24.9	11.0
FH63S-50S-0.5SH(##)	Under Planning (Note)	50	24.5	24.0	2.0	29.9	13.0
FH63S-60S-0.5SH(##)	Under Planning (Note)	60	29.5	29.0	1.5	34.9	16.0

Note : Products without HRS No. are currently being planned for development. Please contact a Hirose representative regarding questions on pin count variation development.

Jan.1.2024 Copyright 2024 HIROSE ELECTRIC CO., LTD. All Rights Reserved.

Downloaded from Arrow.com.

Recommended FPC/FFC, Shielded FFC

● Recommended FPC/FFC Dimensions

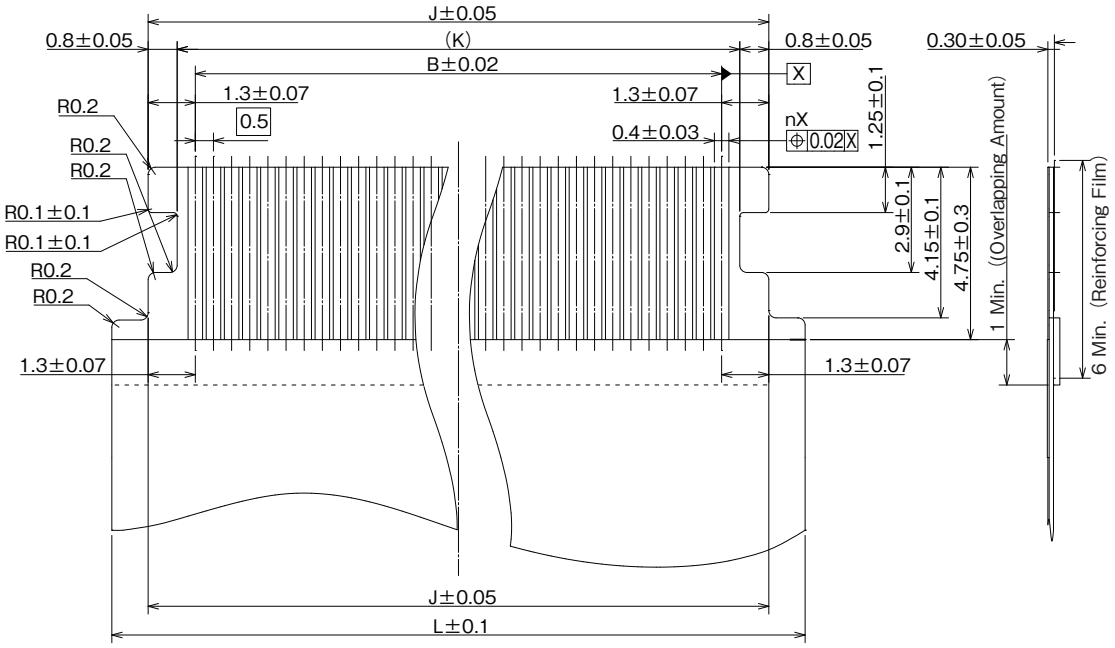

● Recommended Shielded FFC Dimensions

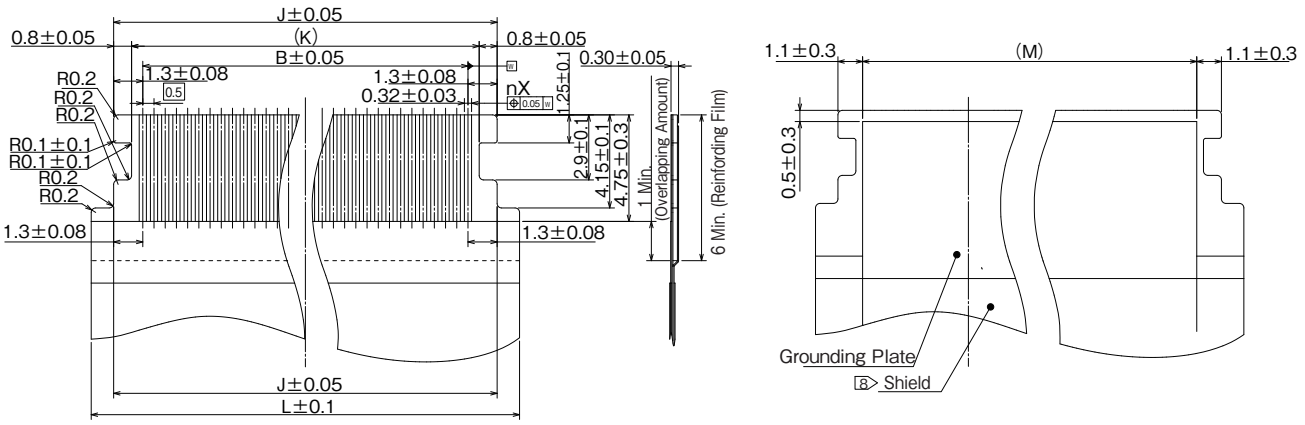

Note : 'n' indicates the number of positions.
8 Place the shield on top of the ground plate.

● Recommended Dimensions of FPC/FFC/Shielded FFC

Unit : mm

Part No.	HRS No.	No. of Pos.	B	J	K	L	M
FH63S-10S-0.5SH(##)	CL0580-4414-0-##	10	4.5	7.1	5.5	9.1	4.9
FH63S-20S-0.5SH(##)	CL0580-4419-0-##	20	9.5	12.1	10.5	14.1	9.9
FH63S-30S-0.5SH(##)	CL0580-4415-0-##	30	14.5	17.1	15.5	19.1	14.9
FH63S-40S-0.5SH(##)	CL0580-4416-0-##	40	19.5	22.1	20.5	24.1	19.9
FH63S-50S-0.5SH(##)	Under Planning (Note)	50	24.5	27.1	25.5	29.1	24.9
FH63S-60S-0.5SH(##)	Under Planning (Note)	60	29.5	32.1	30.5	34.1	29.9

Note : Products without HRS No. are currently being planned for development. Please contact a Hirose representative regarding questions on pin count variation development.

Jan.1.2024 Copyright 2024 HIROSE ELECTRIC CO., LTD. All Rights Reserved.

Downloaded from Arrow.com.

Packaging Specifications

● Embossed Carrier Tape Dimensions

Tape Width 24mm or Less

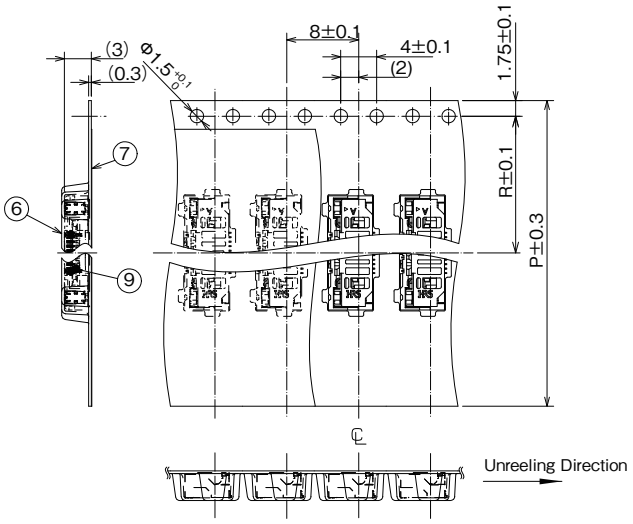

Tape Width 32mm or More

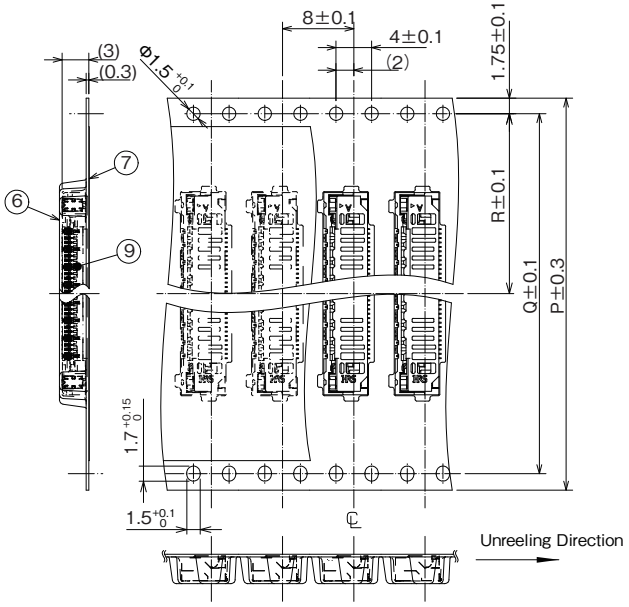

● Reel Dimensions

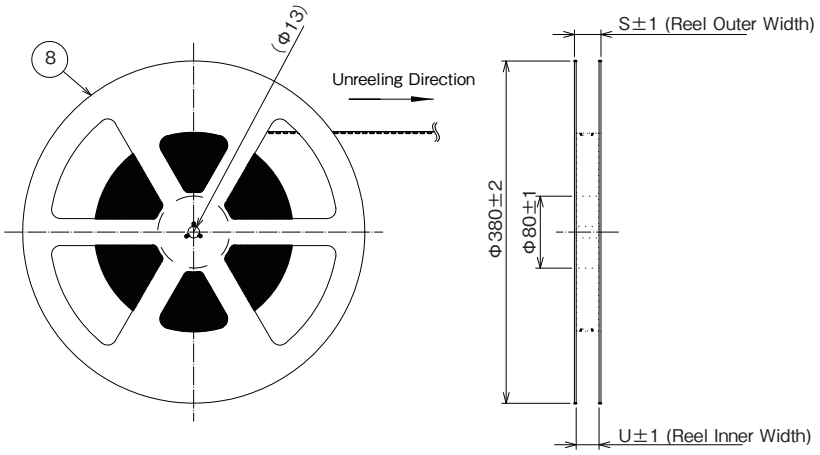

Note : The package complies with JIS C 0806 and IEC 60286-3 (Packaging of components for automatic handling).

Jan.1.2024 Copyright 2024 HIROSE ELECTRIC CO., LTD. All Rights Reserved.

Downloaded from Arrow.com.

● Leader, Trailer Dimensions

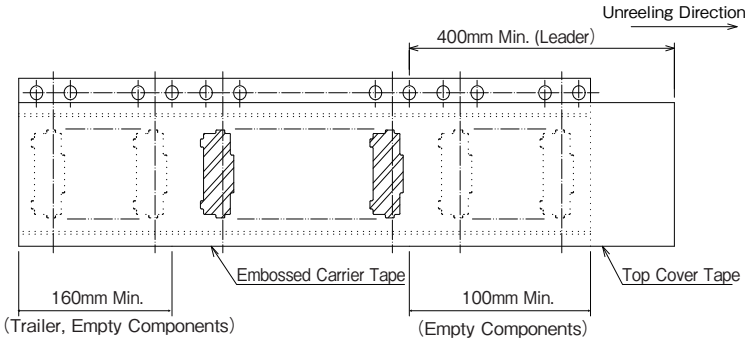

Unit : mm

Part No.	HRS No.	No. of Pos.	P	Q	R	S	U
FH63S-10S-0.5SH(##)	CL0580-4414-0-##	10	24.0	-	11.5	29.4	25.4
FH63S-20S-0.5SH(##)	CL0580-4419-0-##	20	32.0	28.4	14.2	37.4	33.4
FH63S-30S-0.5SH(##)	CL0580-4415-0-##	30	44.0	40.4	20.2	49.4	45.4
FH63S-40S-0.5SH(##)	CL0580-4416-0-##	40	44.0	40.4	20.2	49.4	45.4
FH63S-50S-0.5SH(##)	Under Planning (Note)	50	56.0	52.4	26.2	61.4	57.4
FH63S-60S-0.5SH(##)	Under Planning (Note)	60	56.0	52.4	26.2	61.4	57.4

Note : Products without HRS No. are currently being planned for development. Please contact a Hirose representative regarding questions on pin count variation development.

Jan.1.2024 Copyright 2024 HIROSE ELECTRIC CO., LTD. All Rights Reserved.

Downloaded from Arrow.com.

Recommended FPC/FFC/Shielded FFC Construction

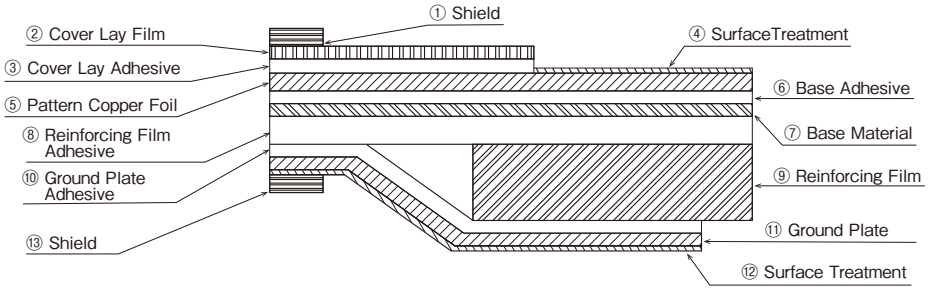

	Material Name	FPC Materials	FPC Thickness (μm)	FFC Materials	FFC Shield FFC Thickness (μm)	FFC FFC Thickness (μm)
①	Shield Tape	—	—		—	—
②	Cover Lay Film	Polyimide 1mil	25	Polyester	12	12
③	Cover Lay Adhesive	Thermosetting Adhesive	25	Adhesive	30	30
④	Surface Treatment	Nickel Underplate 1- 6μm +Gold Plated 0.2μm	(3.7)	Nickel Foundation 0.5 - 5μm +Gold Plated 0.05 - 1μm	(3.275)	(3.275)
⑤	Pattern Copper Foil	Rolled Copper 1oz	35	Annealed Copper Foil	35	35
⑥	Base Adhesive	Thermosetting Adhesive	25	Adhesive	15	30
⑦	Base Material	Polyimide 1mil	25	Polyester	12	12
⑧	Reinforcing Film Adhesive	Thermosetting Adhesive	30	Adhesive	30	30
⑨	Reinforcing Film	Polyimide 8mil	175	Polyester	150	188
⑩	Grounding Plate Adhesive	—	—	Adhesive	15	—
⑪	Grounding Plate	—	—	Conductive Tape Tin Plated 1 to 5μm	37	—
⑫	Surface Treatment	—	—			
⑬	Shield Tape	—				—

Note 1 : This is a reference FPC/FFC/Shielded FFC construction.
Make the thickness of the FPC/FFC mated portion 0.30 ± 0.05mm in reference to the FPC construction.
Note 2 : Contact an FPC/FFC/Shielded FFC maker for details on component construction.

Jan.1.2024 Copyright 2024 HIROSE ELECTRIC CO., LTD. All Rights Reserved.

Downloaded from Arrow.com.

Temperature Profile

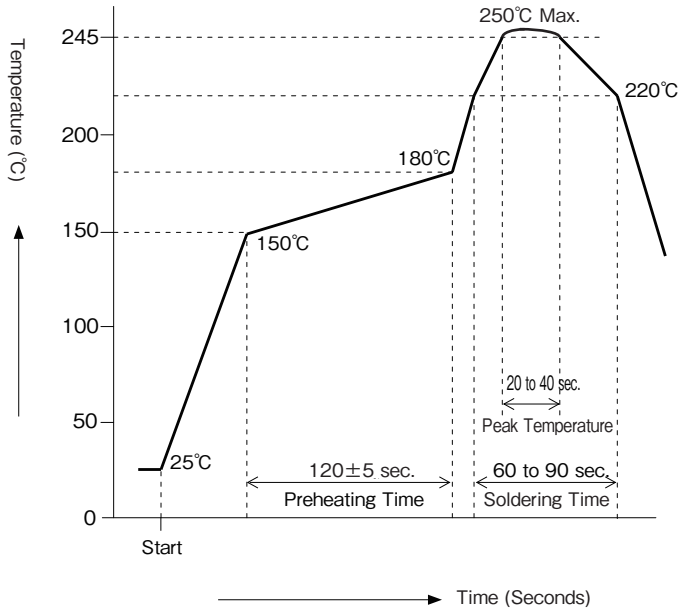

Reflow Method : IR/Hot Air
Reflow Environment : Room Air
Solder : Paste Type Sn/3.0Ag/0.5Cu
(M705-GRN360-K2-V made by Senju Metal Industry Co.)
Test PCB : PCB Material and Size
Glass Epoxy 45×25×1mm
As Listed in Recommended PCB Mounting Pattern
Metal Mask : Thickness and Opening Size
As Listed in Recommended Metal Mask Dimensions

This temperature profile is for the above conditions.
The temperature profile may vary depending on the type of cream solder, the manufacturer, the board size and other conditions such as mounting materials. Please check the mounting status before use.

Connector Operation and Points to Note

This connector requires care during handling. In order to prevent damage and contact failure etc. (incorrect mating, disconnection of FPC pattern) of connectors and FPC, please use after confirming the following.
This connector supports FPC, FFC and Shielded FFC, however only FPC is written below for convenience.

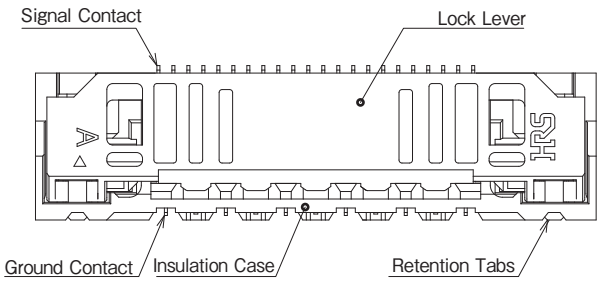

<Diagram of the Connector's Top Surface>

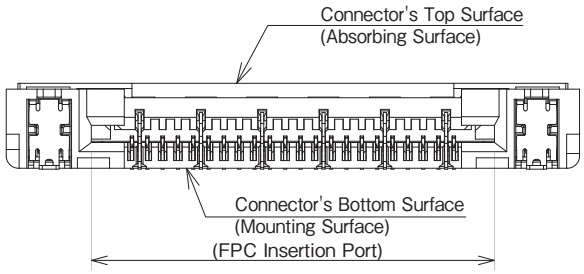

<Diagram of the Connector's Front Surface>

Jan.1.2024 Copyright 2024 HIROSE ELECTRIC CO., LTD. All Rights Reserved.

Downloaded from Arrow.com.

1. Initial Delivery State

This product is delivered with the lock lever closed. The lock lever does not need to be operated before FPC insertion.

[Caution]
- Do not open the lock lever when FPC is not inserted.
  Additionally, the lock lever does not need to be opened except to remove the FPC. (Ex.1)
- Do not operate the connector until it is mounted on the board. (Ex.1)

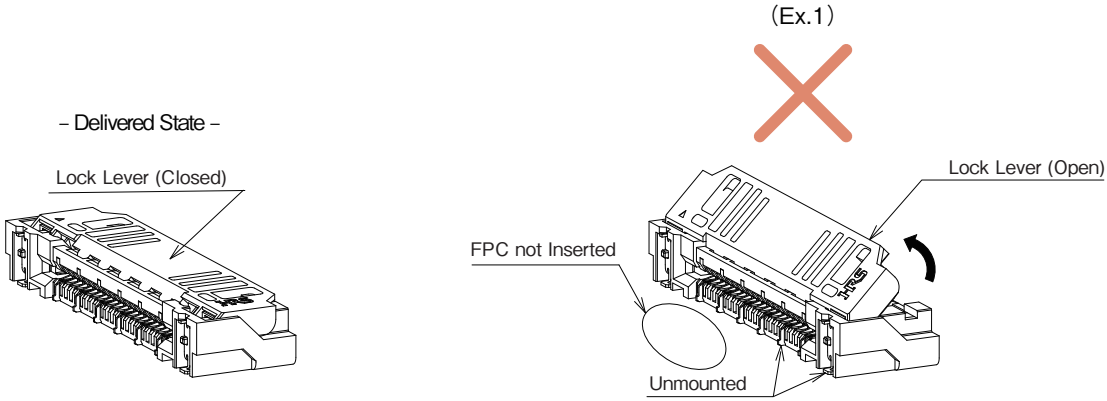

2. FPC Insertion

Insert the FPC fully to the back of the connector and parallel in respect to the board. (Ex.2)

[Caution]
- Please confirm that the lock lever is closed when you insert FPC.
  Do not insert FPC while the lock lever is open. (Ex.3)
- Do not insert FPC while at the same time pressing the lock lever. (Ex.4)
- Insert FPC straight after positioning its tip end in a horizontal plane in reference to the guides on both ends of the connector mating port.
- Insert in a manner that it won't be diagonal to the insertion direction. (Ex.5)
- When inserting, do not move the FPC in a vertical, lateral or diagonal direction. (Ex.6)

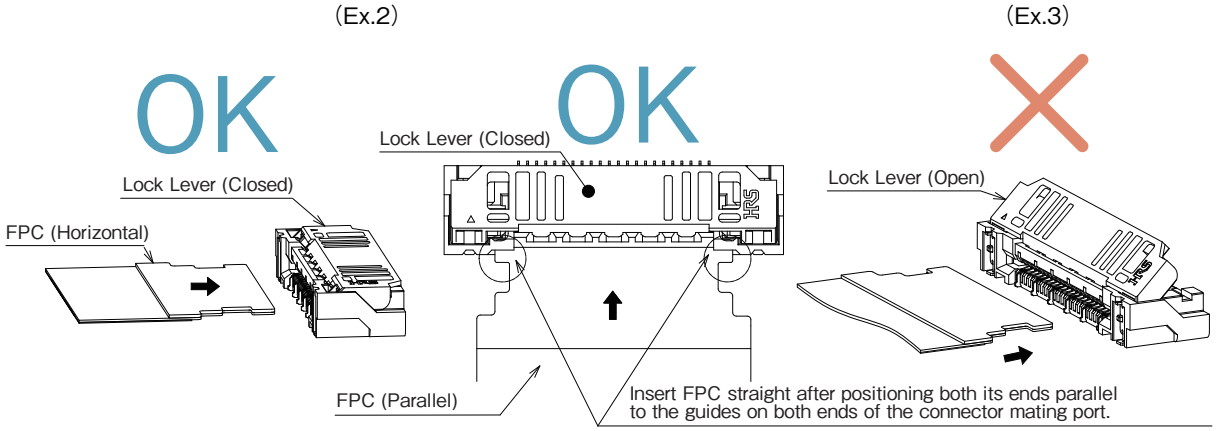

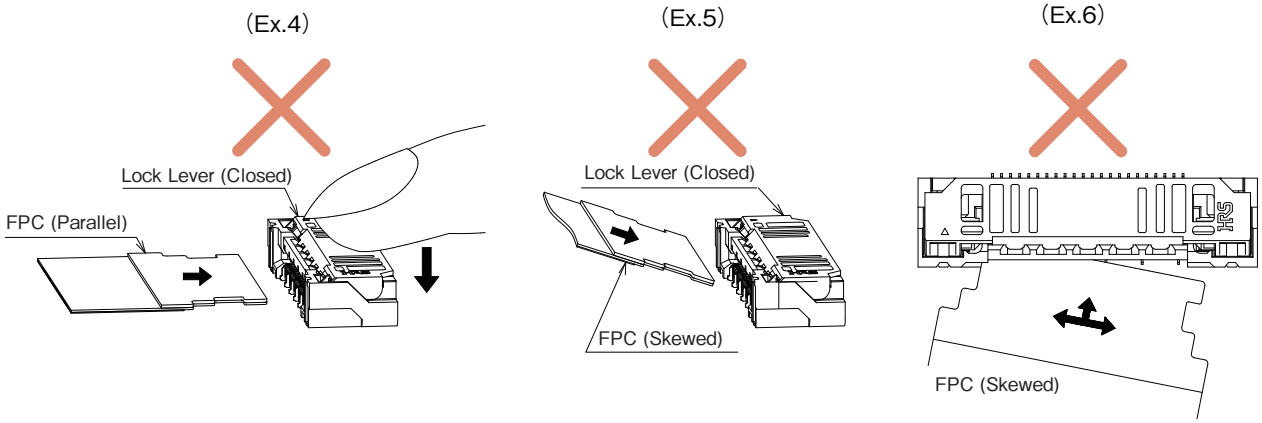

Jan.1.2024 Copyright 2024 HIROSE ELECTRIC CO., LTD. All Rights Reserved.

Downloaded from Arrow.com.

3. FPC Mating Confirmation

Visually confirm the insertion status once FPC insertion is completed. (Ex.7)
(This connector uses the lock protrusion of the lock lever for positioning FPC.)

[Caution]
· Avoid shallow insertion or insertion at a slant. (Ex.8) (Ex.9)
· The lock lever does not need to be operated after FPC insertion due to the one action lock design.

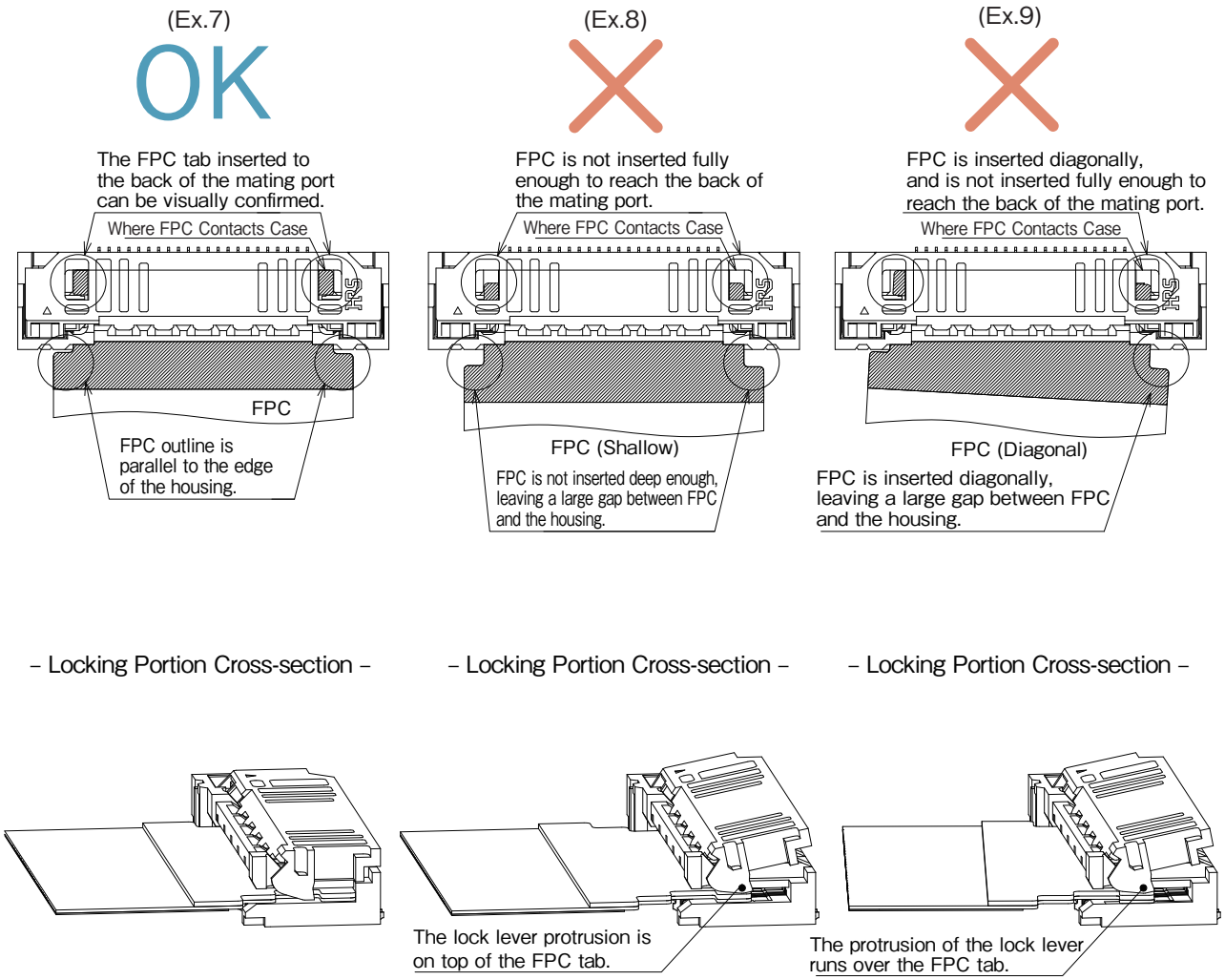

Jan.1.2024 Copyright 2024 HIROSE ELECTRIC CO., LTD. All Rights Reserved.

Downloaded from Arrow.com.

4. How to Unlock the Lock Lever

Slowly raise the actuator and release the lock. (Ex.10)

[Caution]
- When releasing the lock, operate the lock lever around the center. (Ex.11)
- When releasing the lock, do not operate only one side of the lock lever. (Ex.12)
- As the lock lever cannot be opened to over 45°, do not open it over this angle. (Ex.13)
- Do not pull or raise the lock lever by grabbing it. (Ex.14)
- Be sure to operate the lock lever by hand, and do not operate it with sharp-edged tools such as tweezers etc. (Ex.15)
- Don't apply an excessive force to the housing during operation. (Ex.16)
- The FPC insertion direction for this connector is different from the direction of the lock lever operation section. Do not attempt to open from the FPC insertion side. (Ex.17)

(Ex.10)

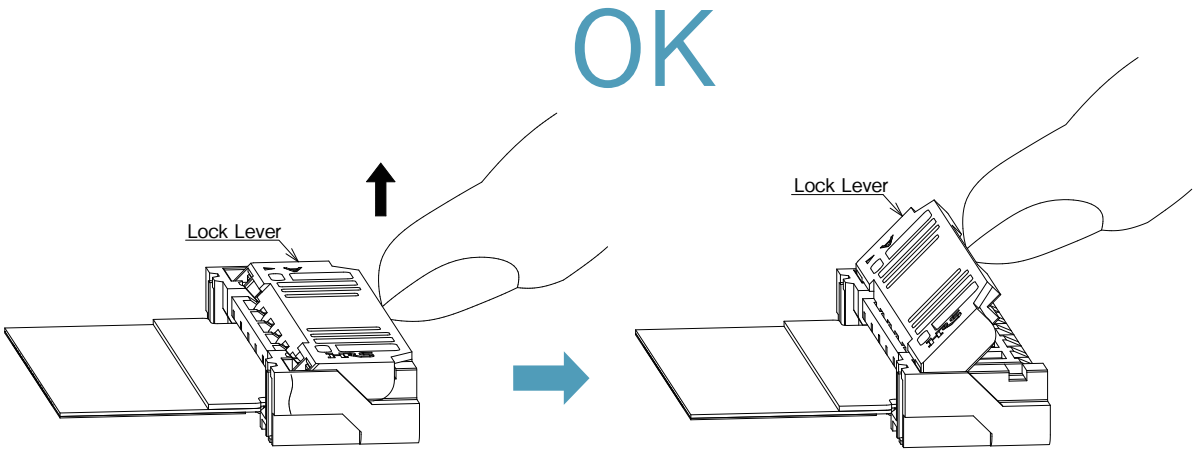

(Ex.11)

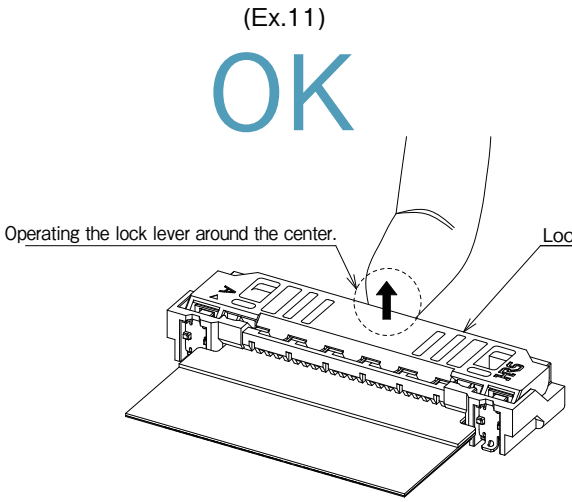

(Ex.12)

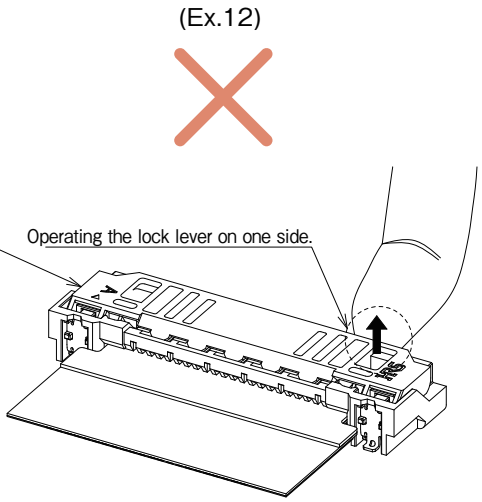

Jan.1.2024 Copyright 2024 HIROSE ELECTRIC CO., LTD. All Rights Reserved.

Downloaded from Arrow.com.

(Ex.13)

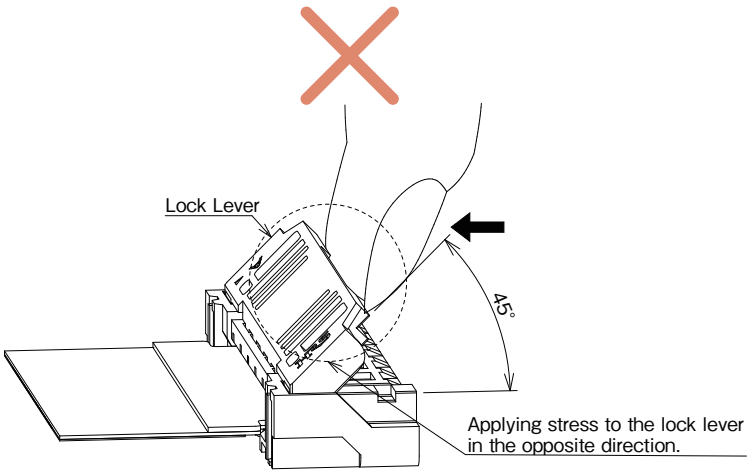

(Ex.14)

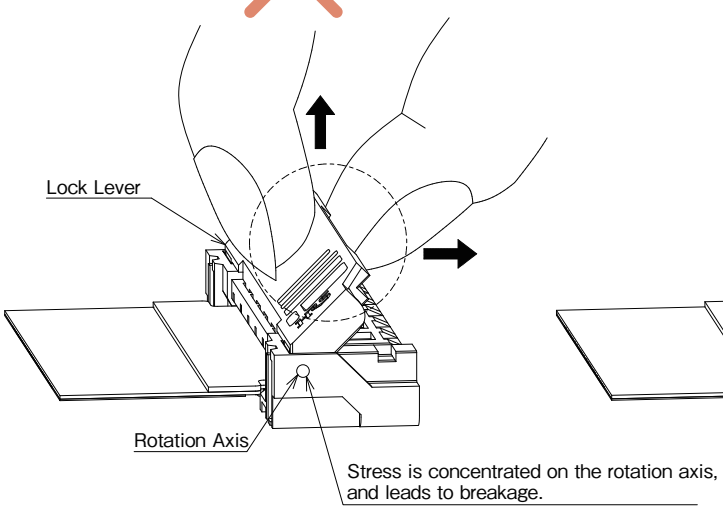

(Ex.15)

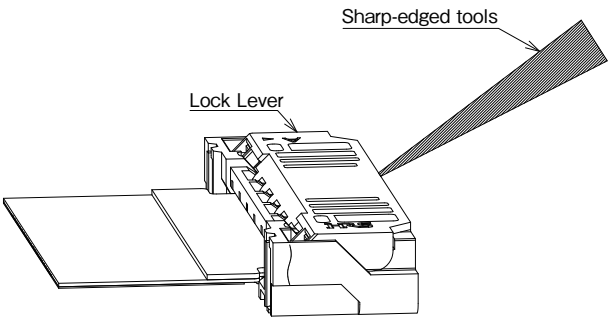

(Ex.16)

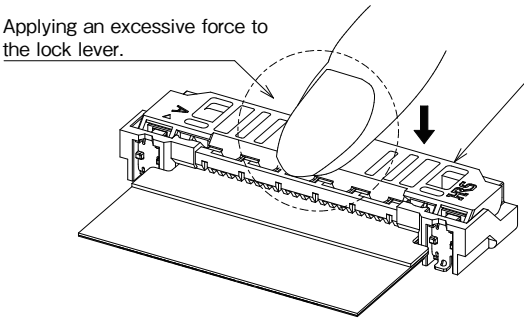

(Ex.17)

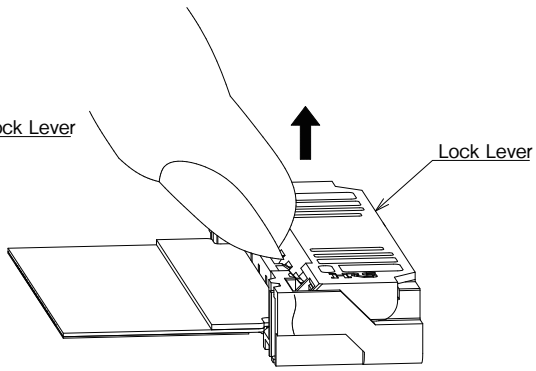

Jan.1.2024 Copyright 2024 HIROSE ELECTRIC CO., LTD. All Rights Reserved.

Downloaded from Arrow.com.

5. FPC Removal

After releasing the lock lever, pull out the FPC in the horizontal direction. (Ex.18)
When removing the FPC, do not press the lock lever. (Ex.19)
The released lock lever may close automatically but this is not a product defect. (Ex.20)

[Caution]
· Do not pull out the FPC while the lever is locked. (Ex.21)
· This connector is designed with an FPC retention mechanism with the lock lever. When pulling out the FPC, do not apply stress above or from the sides. (Ex.22)

(Ex.18)

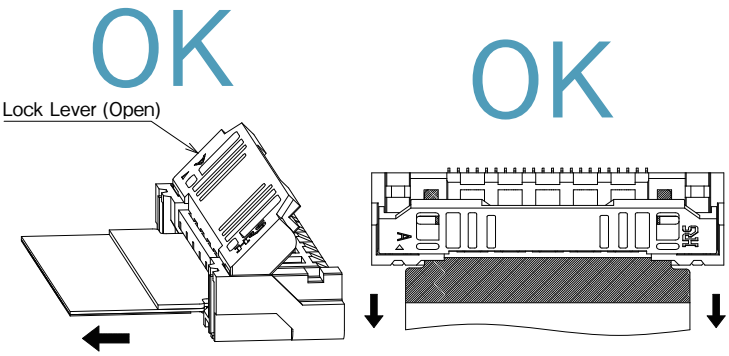

(Ex.19)

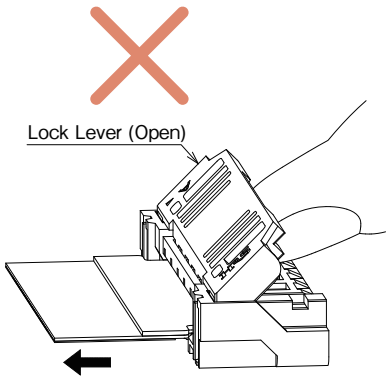

(Ex.20)

– After FPC Removal –

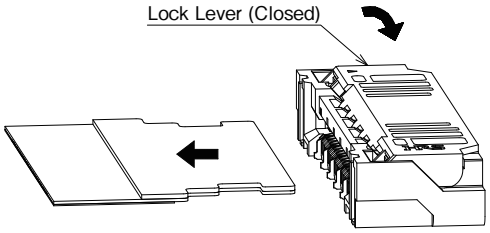

(Ex.21)

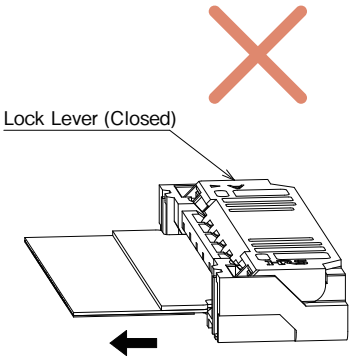

(Ex.22)

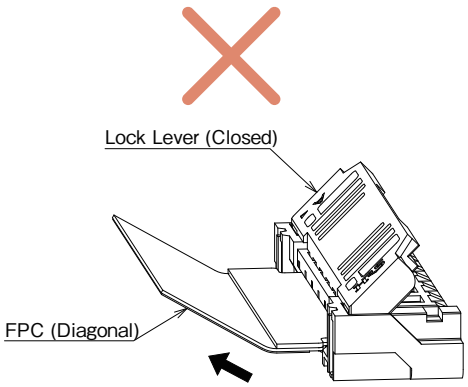

(Ex.23)

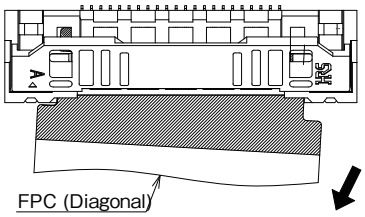

Jan.1.2024 Copyright 2024 HIROSE ELECTRIC CO., LTD. All Rights Reserved.

Downloaded from Arrow.com.

[PCB Layout Cautions]

Stress leading to contact failure may be applied to the connector depending on the routing of the FPC the connector will be mated with.
In order to prevent failure, please consider the following during mechanical design.

[Caution]
- When routing the FPC for use, make sure it has enough slack and do not pull tightly.
- Please check that the reinforcing film is placed horizontal to the board surface. (Ex.23)
- Please insure there is no load applied to the connector in the pulling, inserting or lateral directions.
  Using an FPC bent close to the connector may cause contact failure or FPC FPC damage/disconnection.
  Therefore, please take some measure to secure the FPC etc. (Ex.24)(Ex.25)
- Do not place mounted parts that interfere with the FPC. (Ex.26)
- Please make adjustments with FPC manufacturer for FPC flexibility.
- Please ensure the FPC has adequate insertion space when designing the layout so that it is not inserted diagonally.
  Additionally, insertion becomes difficult if the FPC is too short, so pleasue ensure an adequate FPC length and component layout.
- When you design the board/layout, please secure space needed for connector operation.

(Ex.23)

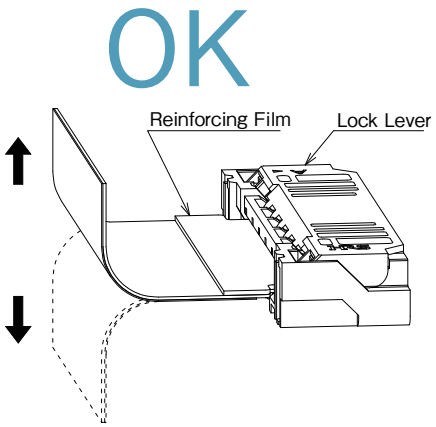

(Ex.24)

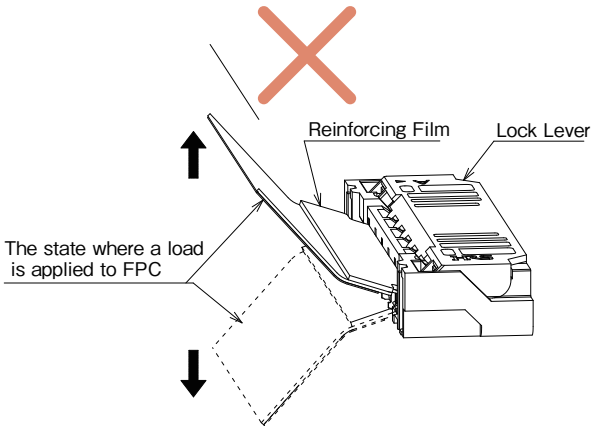

(Ex.25)

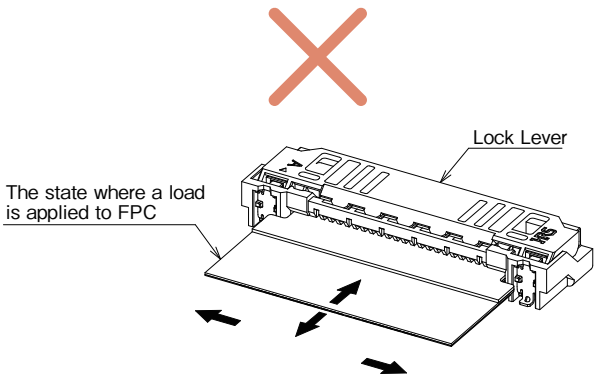

(Ex.26)

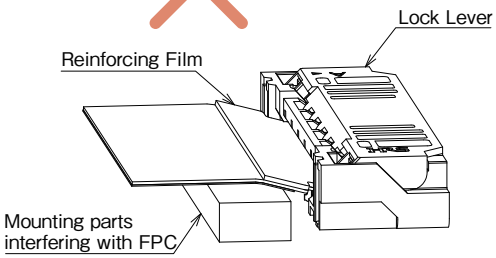

Jan.1.2024 Copyright 2024 HIROSE ELECTRIC CO., LTD. All Rights Reserved.

Downloaded from Arrow.com.

[Board Mounting Notes]

Please be careful of the following during board mounitng.

[Caution]
- Please confirm the recommended PCB mounting pattern, metal mask opening size and FPC design.
- If the PCB mounting pattern is narrower than recommended or the metal mask opening is wider than recommended, solder (flux) wicking is more likely to occur.
  If there is difference from the recommendation, please use after checking the mounted state.
- The dimensional difference between the bottom surface of the contact lead and the mold is designed to be minimal. When there is silk print etc. on the bottom surface of the connector, the lower surface of the connector may be pushed up, resulting in solder not applied or defective fillet formation.
  When there is silk print etc. on the bottom surface of the connector, please use after checking the mounted state.
- Use the reflow conditions within the specifications designated by Hirose.
  The mounted status may vary due to external conditions such as the type of cream solder, manufacturer, and board size. Please use after checking the mounted state.
- Please control the board warpage as much as possible. While the coplanarity of this connector is 0.1mm or less, defective soldering could occur if the board warpage is considerable.
- When mounted on FPC, be sure to provide a reinforcing plate to ease handling. We recommend a reinforcing plate of 0.3mm or thicker made of glass epoxy material.
- Do not apply excessive force (1N or more) when pulling out the emboss from the reel or suctioning the connector from the emboss.

[Cautions When Handling the Board After Mounting]

Please be careful of the following when handling the board after mounting.

[Caution]
- Refrain from handing that may put strain on the board during the assembly process, such as splitting a board into several pieces or screwing the board to a frame. Otherwise the connector may be damaged.
- Board deflection should be 1mm or less when the board width is 100mm. (Ex.27)
  Board deflection may cause stress to the connector resulting in damage.

(Example 27)

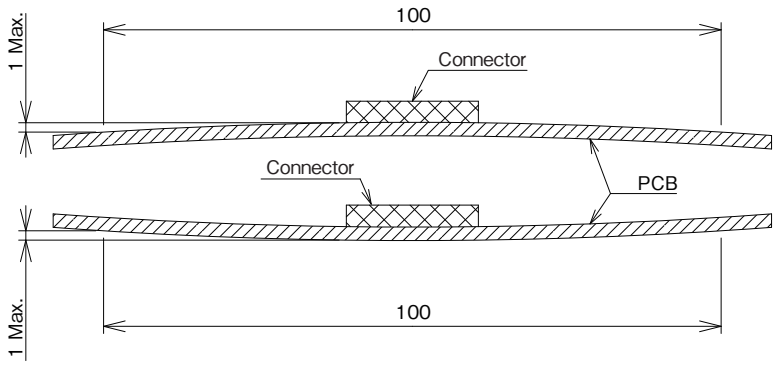

[Cautions for Manual Soldering]

Note the following when performing soldering during repair, etc.

[Caution]
- Do not perform manual soldering with the FPC inserted in the connector.
- Please be careful not to apply excessive heat, or allow the solder iron to touch any place other than the connector contact lead.
  Failure to do so may result in connector deformation or melting.
- Do not supply an excessive amount of solder (flux).
  If too much solder (flux) is supplied to the contact, the solder or flux could adhere on the contact point and cause contact failure.
  Additionally, supplying excessive solder to the retention tabs may result in actuator rotation failure, causing connector damage.

Jan.1.2024 Copyright 2024 HIROSE ELECTRIC CO., LTD. All Rights Reserved.

Downloaded from Arrow.com.

Jan.1.2024 Copyright 2024 HIROSE ELECTRIC CO., LTD. All Rights Reserved.

While Taking into Consideration

Specifications mentioned in this catalog are reference values.
When considering to order or use this product, please review the Drawing and Product Specifications sheets.
Use an appropriate cable when using the connector in combination with cables.
If considering usage of a non-specified cable, please contact your sales representative.
If assembly process is done by jigs & tools which are not identified by Hirose, the warranty of the product may be affected.
If considering usage for below mentioned applications, please contact your sales representative.
In cases where the application will demand a high level of reliability, such as automotive, medical instruments, public infrastructure, aerospace/defense etc. Hirose must review before assurance of reliability can be given.

HIROSE

HIROSE ELECTRIC CO.,LTD. 2-6-3,Nakagawa Chuoh,Tsuzuki-Ku,Yokohama-Shi 224-8540,JAPAN
https://www.hirose.com

※The contents of this catalog are current as of date of 6/2023. Contents are subject to change without notice for the purpose of improvements.
※The HRS logo and "HIROSE" are trademarks of HIROSE ELECTRIC CO., LTD.

Downloaded from Arrow.com.