3-644748 -1 Product Details

Live Product Chat

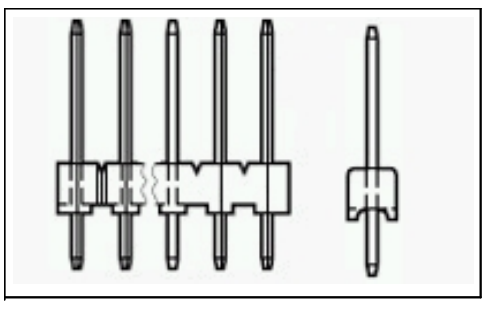

3-644748 -1

TE Part Number: 3 -644748-1

Active

Add to Part List

MTA, CST -100 II, MT -6 and SL Connectors and Headers

Always EU RoHS/ELV Compliant (Statement of Compliance)

Product Highlights:

- MTA-100 Connectors
- Number of Positions = 3
- Mating Type = Header
- Wire-to-Board Application
- 2.54 mm Contact Centerline Spacing

View all Features | Find Similar Products

Quick Links

- Check Pricing & Availability
- Search for Tooling
- View Mating Products (102)
- Product Feature Selector
- Contact Us About This Product

Documentation & Additional Information

Product Drawings:

- MTA-100 HEADER ASSEMBLY, NARROW .025 SQUARE STRAIGHT... (PDF, English)

Catalog Pages/Data Sheets:

- None Available

Product Specifications:

- Connector, MTA 100 (PDF, English)

Application Specifications:

- None Available

Instruction Sheets:

- None Available

CAD Files:

- None Available

List all Documents

Additional Information:

- Product Line Information

Related Products:

- Tooling
- Mating Products (102)

Product Features (Please use the Product Drawing for all design activity)

Product Type Features:

- Product Type = MTA-100 Connectors
- Number of Positions = 3
- Mating Type = Header
- PCB Mount Angle = Vertical
- PCB Retention Feature = Yes
- Mating Polarization = Without
- Mating Connector Lock = Without
- Four Points of Contact = Without
- Shrouded = No
- Mounting Ears = Without
- PCB Thickness (mm [in]) = 1.60 [0.063]
- Post Size (mm [in]) = 0.64 [.025]

Mechanical Attachment:

- Panel Attachment = Without

Electrical Characteristics:

- Voltage Rating (VAC) = 250

Termination Related Features:

- Solder Tail Contact Plating = Tin
- Termination (Solder) Post Length (mm [in]) = 2.79 [0.110]

Body Related Features:

- Narrow = Yes
- Post Number(s) Omitted = 2
- Solder Tail Contact Material = Copper Alloy
- PCB Retention Method = Boardlock(s)

Contact Related Features:

- Contact Centerline Spacing (mm [in]) = 2.54 [0.100]
- Contact Shape = Square
- Contact Mating Area Plating Material = Tin
- Contact Material = Copper Alloy
- Retention Post(s) Location = 1, 3

Housing Related Features:

- Housing Color = Natural
- Housing Flammability Rating = UL 94V-0
- Housing Material = Thermoplastic Polyester

Configuration Related Features:

- Backwall/Post Interruption(s) = Without

Industry Standards:

- RoHS/ELV Compliance = RoHS compliant, ELV compliant
- Lead Free Solder Processes = Wave solder capable to 240°C
- RoHS/ELV Compliance History = Always was RoHS compliant

Conditions for Usage:

- Terminate To = Printed Circuit Board

Operation/Application:

- Application = Wire-to-Board

Other:

- Brand = AMP

© 2008 Tyco Electronics Corporation All Rights Reserved

Downloaded from Arrow.com.