DIALIGHT PART NO.	LED COLOR
598-2E00-107F	WHITE (X=0.24,Y=0.21)
598-2E00-102F	

NOTES:
1. PIN NUMBERS ARE FOR REFERENCE ONLY, DESIGNATION NON-EXISTENT ON PART.
2. LABELING FOR REEL AND OUTSIDE OF ALUMINUM BAG, DIALIGHT P/N, QUANTITY PER REEL, DATE CODE, INTENSITY BIN CODE, LOT NUMBER AND COUNTRY OF ORIGIN.
3. THIS PRODUCT IS RoHS COMPLIANT. EACH BAG IS TO BE MARKED WITH RoHS COMPLIANT LABEL OR EQUIVALENT MARKINGS. LED MUST BE Pb FREE.
4. MOISTURE SENSITIVITY LEVEL 3.
5. QUANTITY : PART NUMBERS END WITH 107F REFER AS 3000 PCS/ REEL
   PART NUMBERS END WITH 102F REFER AS 20 PCS/ STRIP

REV	ECN NO	REVISIONS	DRN	CKD	APP	DATE
A	106183	NEW RELEASE	JSG	CS	NO	31MAY23

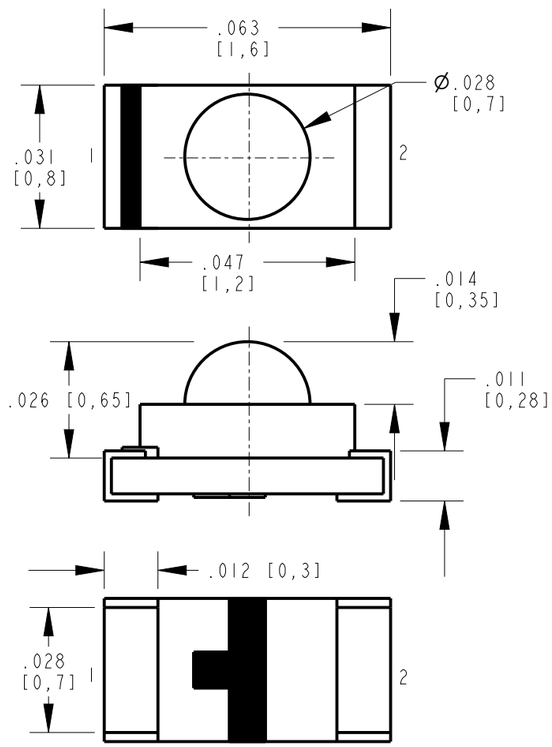

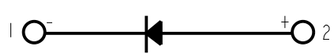

LED SCHEMATIC

Carrier Tape Dimension

TAPING SPECIFICATIONS

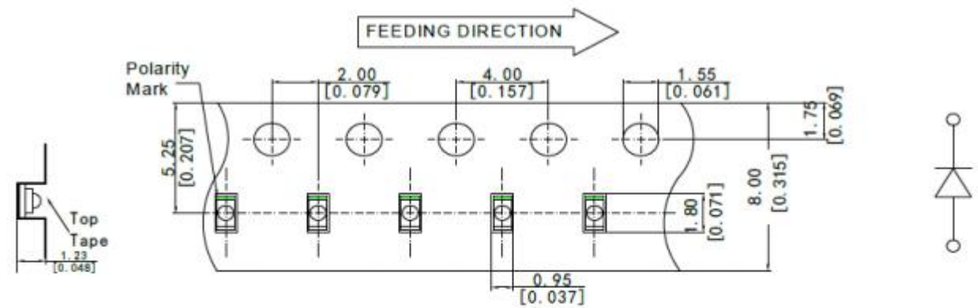

Carrier Tape Dimension

Reel Dimension

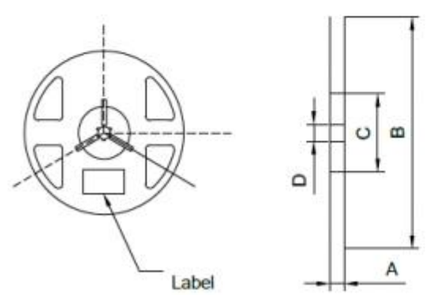

A	8.0±0.1mm
B	178±1mm
C	60±1mm
D	13.0±0.5mm

TOLERANCE (UNLESS OTHERWISE SPECIFIED): ±0.003(±0.1mm)

RECOMMENDED RoHS SOLDER PROFILE

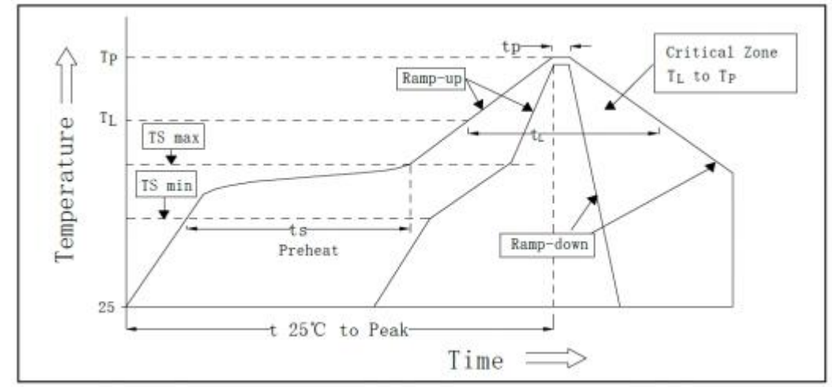

MARK	DEFINITION	CONDITION
TS_{max}	MAXIMUM OF PRE-HEATING TEMPERATURE	200°C
TS_{min}	MINIMUM OF PRE-HEATING TEMPERATURE	150°C
T_s	TIME FORM Tsmin To Tsmax	60s-120s
T_L	REFERENCE TEMPERATURE	217°C
t_L	RETENTION TIME FOR T_L	60s-150s
T_P	PEAK TEMPERATURE	260°C
t_P	TIME FOR PEAK TEMPERATURE	WITHIN 10s
DTr/Dt	TEMPERATURE RISING RATE	WITHIN 3°C/sec
DTd/Dt	TEMPERATURE DECREASING RATE	WITHIN 6°C/sec

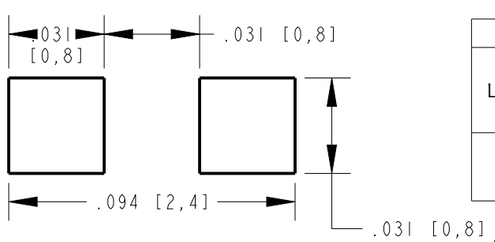

RECOMMENDED SOLDER PAD LAYOUT

ABSOLUTE MAXIMUM RATINGS AT 25°C							
LED COLOR	POWER DISSIPATON (mW)	FORWARD CURRENT (mA)	PEAK FORWARD CURRENT (mA)	OPERATING TEMPRATURE (°C)	STORAGE TEMPRATURE (°C)	DERATING CURVE FROM 25°C (mA/°C)	ELECTROSTATIC DISCHARGE (V)
WHITE	108	30	60 1/10 DUTY CYCLE, 0.1ms PULSE WIDTH	-40°C TO +85°C	-40°C TO +85°C	0.250	1000

OPERATING CHARACTERISTICS AT 25°C AMBIENT									
LED COLOR	TEST CONDITION (mA)	LUMINOUS INTENSITY (mcd)		FORWARD VOLTAGE (V)		CHROMATICITY COORDINATES	REVERSE CURRENT (uA)	VIEWING ANGLE (DEGREES)	THERMAL RESISTANCE (°C/W)
	TYP	MIN	MAX	MIN	MAX	TYP	MAX	TYP	MAX
WHITE	20mA	350	800	2.8	3.6	*X=0.241 Y=0.212	10µA @ VR=5V	160	450

*CALCULATED

ATTENTION:
OBSERVE PRECAUTIONS FOR HANDLING ELECTROSTATIC SENSITIVE DEVICES

THIS DRAWING AND THE CONTENTS HEREIN ARE CONFIDENTIAL AND THE SOLE PROPERTY OF DIALIGHT CORP. REPRODUCTION OF THIS DRAWING OR CONSTRUCTION OF ANY PARTS WITHIN THIS DRAWING ARE FORBIDDEN WITHOUT THE WRITTEN CONSENT OF DIALIGHT CORP.

DIALIGHT CORP INTERNAL REFERENCE ONLY = 3D MODEL : 4500521862223-.0

SCALE: 1.000
ALL DIM's: INCH (mm)

TOLERANCES:
UNLESS OTHERWISE SPECIFIED
FRACTIONS: ±1/64
DECIMALS (.XX): ±.01
DECIMALS (.XXX): ±.005
DECIMALS (.XXXX): ±.0005
ANGLES: ±1°

FINISH: -

FSCM 83330

DRAWING NUMBER: C-18667
REV: A

TITLE: SM 0603 WHITE LED WITH DOME LENS

MATERIAL: -

Dialight
1501 ROUTE 34 SOUTH
FARMINGDALE, NJ 07727
(732) 919-3119
www.dialight.com

SHEET 1 OF 1
FAMILY TABLE:

Downloaded from Arrow.com.