REVISIONS			
LTR	DESCRIPTION	DATE	APPROVED
N/C	INITIAL RELEASE PER ECN# T-17740	92 SEPT 8	Z. TEMAN
A	REVISED PER ECN# T-18523		

NOTES:

1. MATERIAL: LNP STATKON-FE (VIRGIN) HIGH DENSITY POLYETHYLENE.
   COLOR: BLACK
2. RESISTIVITY OF MATERIAL ELECTRICALLY CONDUCTIVE PER MIL-STD-1686
3. VIEW SHOWING TYPICAL INSTALLATION (ROTATED 180°).

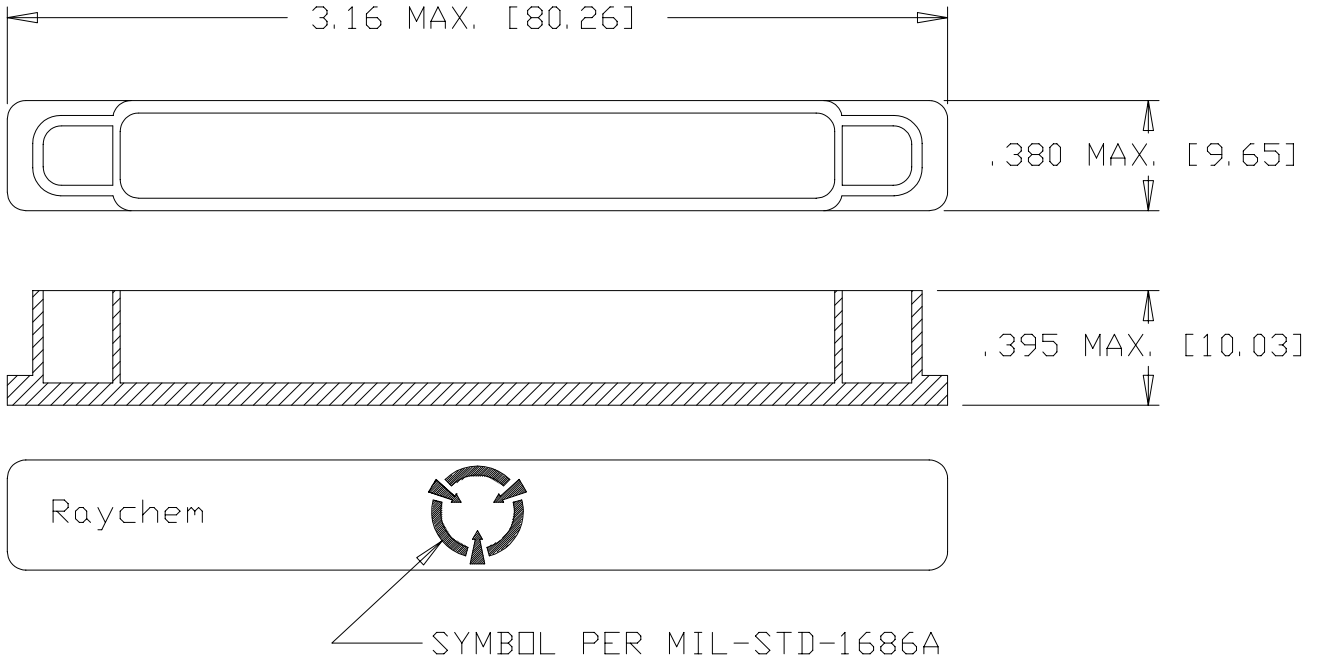

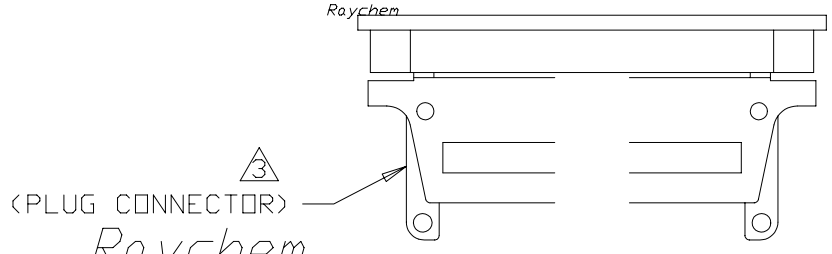

Raychem

If this document is printed it becomes uncontrolled.
Check with the web for latest revision.

SPECIFICATION CONTROL DRAWING

© Raychem Corporation 1992

UNLESS OTHERWISE SPECIFIED DIMENSIONS ARE IN INCHES. METRIC DIMENSIONS ARE IN BRACKETS.

DECIMALS
.XXX ± ——— [—— mm]
.XX ± ——— [—— mm]
ANGLES
.X ± ———

WEIGHT
2.37 g MAX.

DRAWN	J. B. K.	92 AUG 10
CHECKED		
APPROVED		
APPROVED	Z. TEMAN	92 SEPT 8

CAD NAME 009233-1

THIRD ANGLE PROJECTION

RAYCHEM CORPORATION
300 CONSTITUTION DRIVE
MENLO PARK, CALIFORNIA 94025

TITLE
CAP, DUST, PLUG,
2 INCH, CONDUCTIVE,
MTC SERIES

PCN: 707379

SIZE	CODE IDENT. NO.	DWG. NO.	REV
A	06090	CHA-0269	A

DO NOT SCALE THIS DRAWING | SHEET 1 OF 1