TAOGLAS®

Datasheet

2.4GHz High Efficiency Loop Antenna

Part No:
WLA.01

Description

2400MHz to 2500MHz WLAN/Wi-Fi®/Bluetooth®

Features:

Low Profile SMD Antenna

Dimensions: 3.2 x 1.6 x 0.5mm

Peak gain 1dBi typ

50Ω Impedance

RoHS and REACH Compliant

Downloaded from Arrow.com.

1.	Introduction	3
2.	Specification	4
3.	Mechanical Drawing	6
4.	Antenna Integration Guide	7
5.	Solder Reflow Profile	15
6.	Packaging	16
7.	Antenna Characteristics	17
8.	Radiation Patterns	21
9.	Application Note	25
	Changelog	37

Taoglas makes no warranties based on the accuracy or completeness of the contents of this document and reserves the right to make changes to specifications and product descriptions at any time without notice. Taoglas reserves all rights to this document and the information contained herein. Reproduction, use or disclosure to third parties without express permission is strictly prohibited.

Ireland & USA
ISO 9001:2015
Certified

Taiwan
ISO 9001:2015
Certified

IATF16949

Downloaded from Arrow.com.

1. Introduction

The WLA.01 2.4GHz Loop antenna is a high efficiency, miniature SMD, edge mounted ceramic antenna for very small space requirements for Wi-Fi®, WLAN, Zigbee®, Bluetooth®, and 802.11 applications. At just 3.2mm*1.6mm*0.5mm, the WLA.01 is one of the smallest antennas available worldwide. The WLA.01 uses the main PCB as its ground plane, thereby increasing the efficiency of the antenna. It can be tuned for different PCB sizes, simply by changing the value of the matching circuit. The antenna can be mounted either at the centre or the corner of the PCB, see section 4 for integration guidelines. This antenna is delivered on tape and reel for ease of assembly in production.

Upon testing of any of our antennas with your device and a selection of appropriate layout, integration technique, or cable, Taoglas can make sure any of our antennas' peak gain will be below the peak gain limits. Taoglas can then issue a specification and/or report for the selected antenna in your device that will clearly show it complying with the peak gain limits, so you can be assured you are meeting regulatory requirements for that module.

For example, a module manufacturer may state that the antenna must have less than 2dBi peak gain, but you don't need to select an embedded antenna that has a peak gain of less than 2dBi in free-space. This will give you a less optimized solution. It is better to go for a slightly higher free-space peak gain of 3dBi or more if available. Once that antenna gets integrated into your device, performance will degrade below this 2dBi peak gain due to the effects of GND plane, surrounding components, and device housing. If you want to be absolutely sure, contact Taoglas and we will test. Choosing a Taoglas antenna with a higher peak gain than what is specified by the module manufacturer and enlisting our help will ensure you are getting the best performance possible without exceeding the peak gain limits.

This antenna can be mounted with no performance degradation in either orientation if the antenna is soldered correctly via Surface mounting. Please see the integration instructions section for further detail regarding the optimum way to integrate this antenna into your device.

Downloaded from Arrow.com.

The WLA.01 is designed to mount at the center of the edge of an evaluation board measuring 80 x 40mm. The antenna performance was measured with the WLA.01 mounted on the evaluation board with SMA(F) connector.

Typical Applications Include:

- Bluetooth® Devices such as Headphones
- Hand-held devices when Bluetooth®/Wi-Fi® functions are needed, e.g., Smart phone.
- Devices requiring IEEE802.11 b/g and ZigBee®
- Wireless PCMCIA cards or USB dongle

For further optimization to customer-specific device environments and for support to integrate and test this antennas performance in your device, contact your regional Taoglas Customer Services Team.

Downloaded from Arrow.com.

2. Specification

Wi-Fi Electrical								
Band	Frequency (MHz)	Efficiency (%)	Average Gain (dB)	Peak Gain (dBi)	Impedance	VSWR	Radiation Pattern	Max. input power
Wi-Fi 2.4GHz	2400-2500	67.8	-1.69	1.0	50 Ω	<2	Omni-directional	5W
Testing was conducted with the WLAD.01 Evaluation Board, which is available through our distribution channels.								

Mechanical	
Dimensions	3.2*1.6*0.5mm
Material	Ceramic

Environmental	
Operating Temperature	-40°C~+85°C
Storage Temperature	-40°C~+105°C
Temperature Coefficient（τf）	0 ± 20 ppm @-20ºC to +80ºC
Recommended Reel Storage Condition	5°C to 40°C Relative Humidity 20% to 70%
Moisture Sensitivity Level (MSL)	3 (168 Hours)

Downloaded from Arrow.com.

3. Mechanical Drawing (in mm)

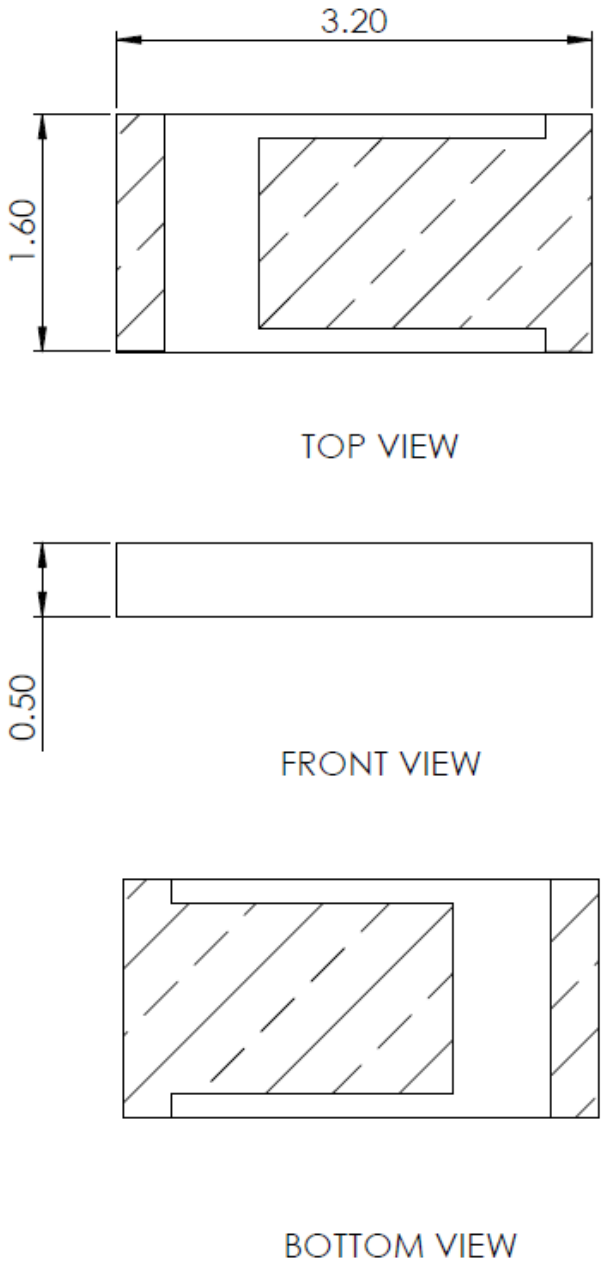

Downloaded from Arrow.com.

4. Antenna Integration Guide

The following is an example on how to integrate the WLA.01 into a design. This antenna has 3 pins, where one pin is used for the RF Feed. Taoglas recommends using a minimum of 80x40mm ground plane (PCB) to ensure optimal performance.
The antenna should be placed mid-point on the long side of the PCB to take advantage of the ground plane on each side of the antenna.

Top view of PCB.

Please find the Integration files in Altium, 2D formats and the 3D model for the WLA.01 here:
https://www.taoglas.com/product/wla-01-2-42-5ghz-ceramic-loop-antenna-3-21-60-5mm-linear-polarized/

Downloaded from Arrow.com.

4.1 Schematic Symbol and Pin Definitions

Above is a 3D model of the WLA.01 on a PCB.

The circuit symbol for the WLA.01 is shown below. The antenna has 3 pins as indicated below.

Pin	Description
1	RF Feed
2	Ground
3	Fine Tuning Element

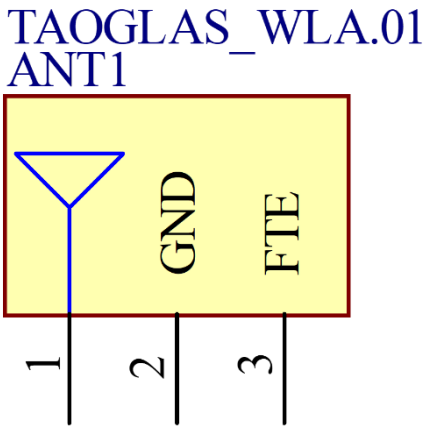

Downloaded from Arrow.com.

4.2 Footprint

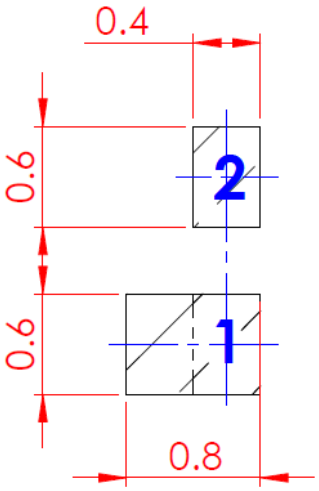

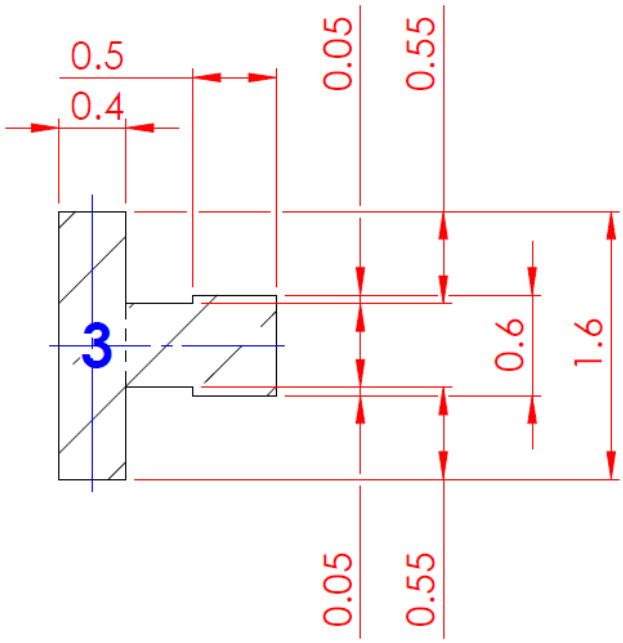

Pin	Description
1	RF Feed
2	Ground
3	Fine Tuning Element

Downloaded from Arrow.com.

4.3 Top Solder Paste

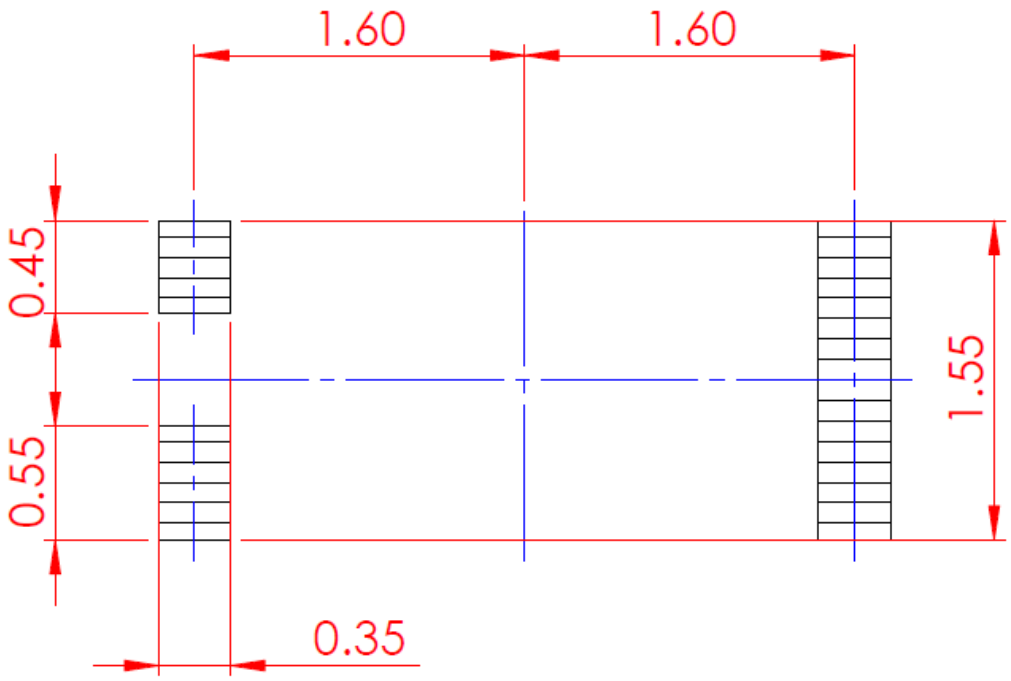

Downloaded from Arrow.com.

4.4 Copper Clearance for WLA.01

The footprint and clearance on the PCB must comply with the antenna's specification. The PCB layout shown in the diagrams below demonstrates the WLA.01 clearance area. The copper keep out area applies to all layers on the PCB.
The copper clearance area extends to 5.4mm in length and 5mm in width around the antenna. The PCB edge clearance should be a minimum of 0.1mm, example below is 0.2mm.

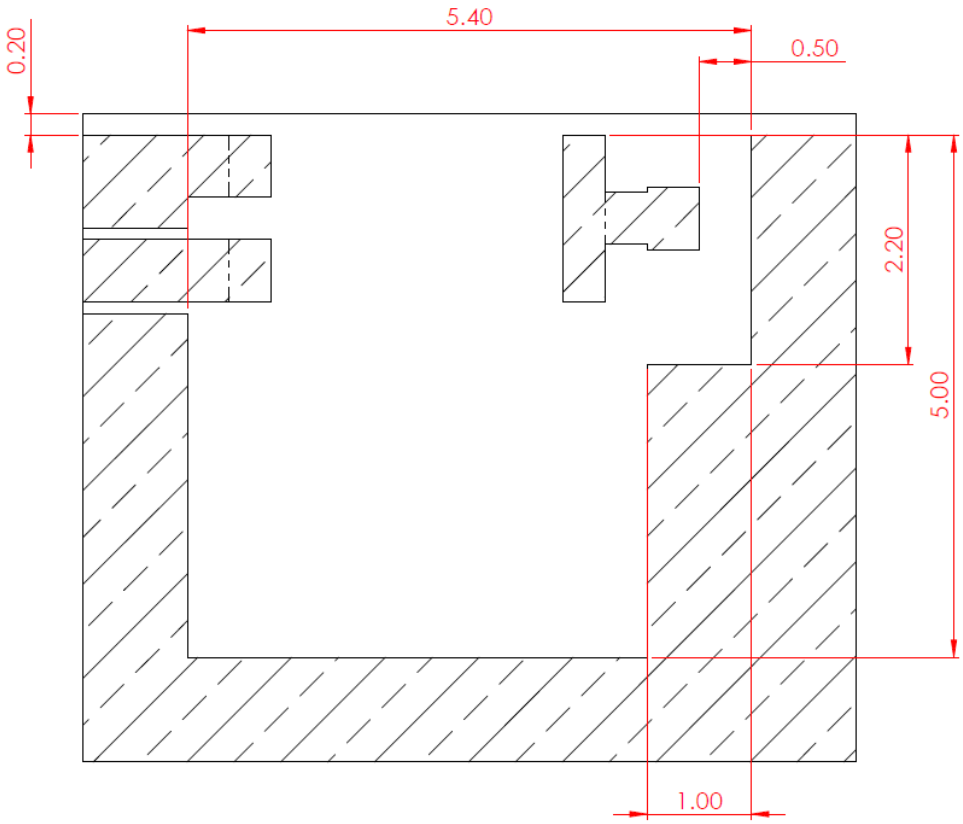

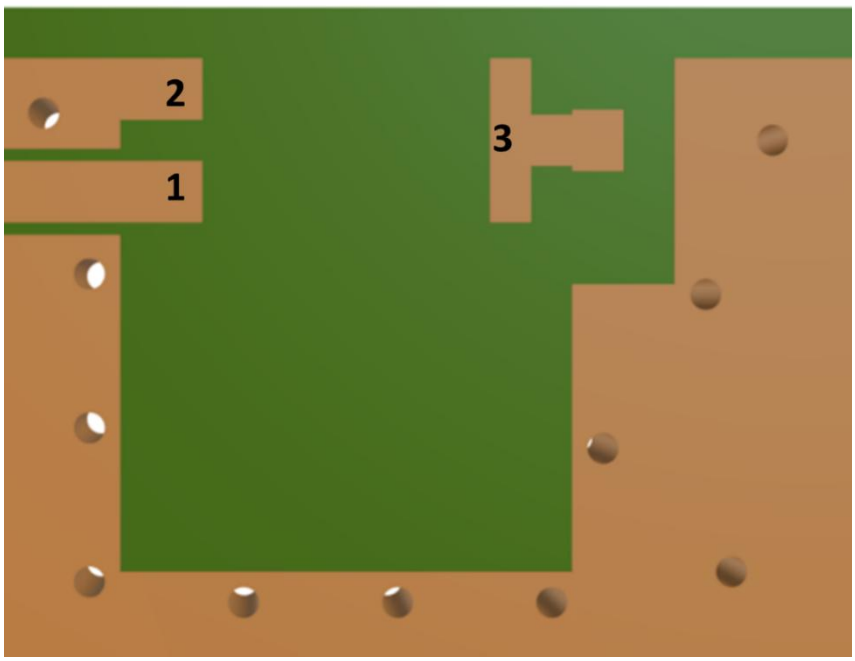

Downloaded from Arrow.com.

4.5 Schematic Layout

Matching components with the WLA.01 are required for the antenna to have optimal performance in the spaces specified in the schematic below. Additional matching components may be necessary for your device, Taoglas recommends incorporating extra component footprints, forming a “pi” network, for the WLA.01.

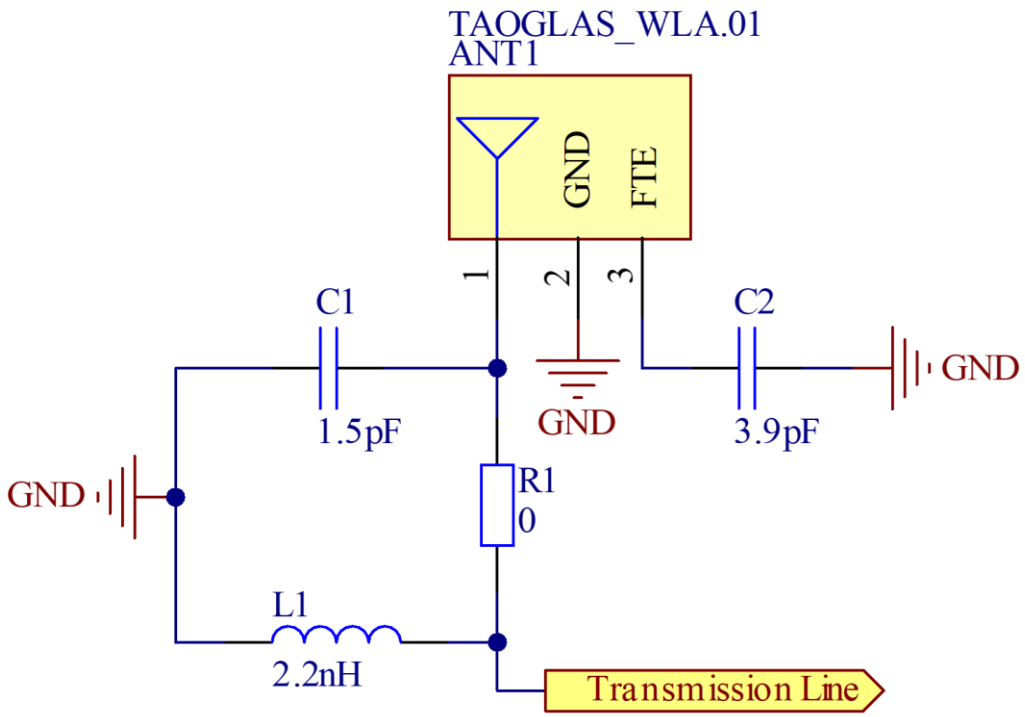

Designator	Type	Value	Manufacturer	Manufacturer Part Number
C1	Capacitor	1.5pF	Murata	GRM1555C1H1R5CA01D
C2	Capacitor	3.9pF	Murata	GRM1555C1H3R9CA01D
L1	Inductor	2.2nH	TDK	MHQ1005P2N2CT000
R1	Resistor	0Ω	Panasonic	ERJ-2GE0R00X

Downloaded from Arrow.com.

4.6 Antenna Integration

The WLA.01 should be placed mid-point on the long side of the PCB to take advantage of the ground plane extending from each side of the antenna.
The RF trace must maintain a 50Ω transmission line. A “Pi” Matching Network is recommended for the RF transmission line, the values and components for the matching circuit will depend on the tuning needed. Ground vias should be placed around the transmission line and the copper clearance area.

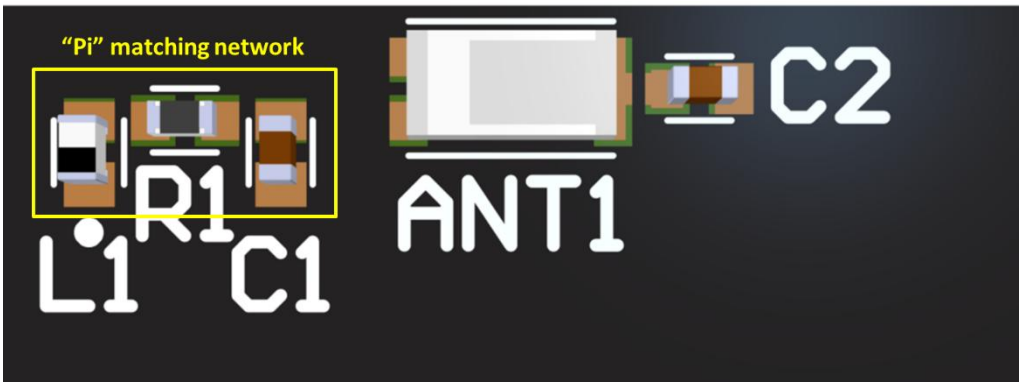

WLA.01 antenna mounted on a PCB, showing “Pi” matching network.

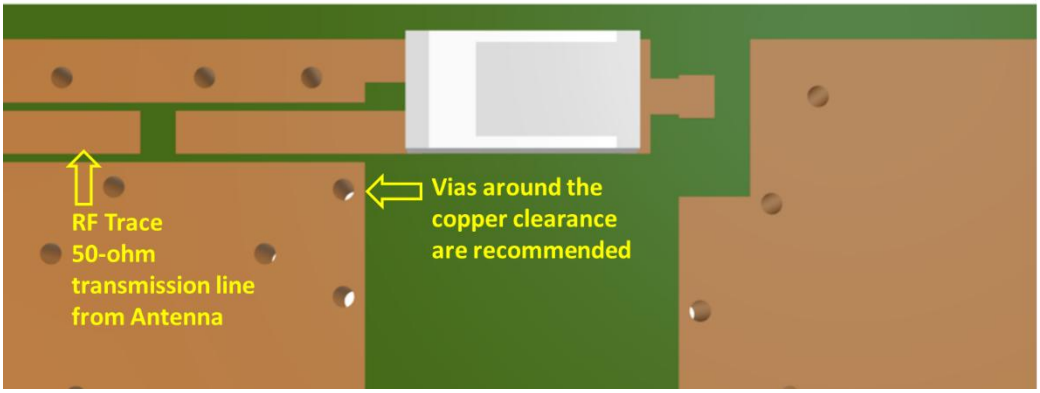

WLA.01 antenna mounted on a PCB, showing transmission line and integration notes.

Downloaded from Arrow.com.

4.7 Final Integration

The top side image shown below highlights the antenna transmission line. Taoglas recommends using a minimum of 80x40mm ground plane (PCB) to ensure optimal performance.

Top Side (WLA.01 placement on 80x40mm PCB)

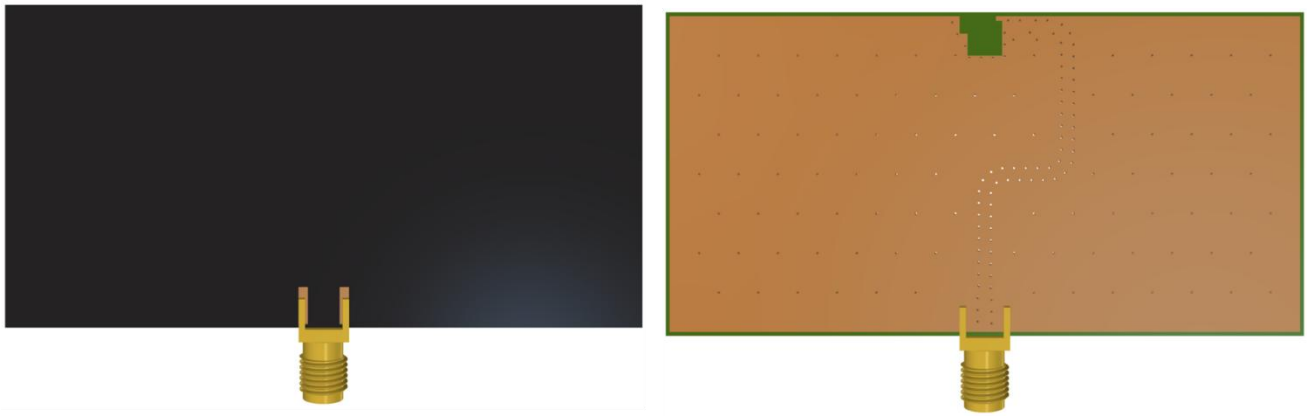

Bottom Side (80x40mm PCB)

Downloaded from Arrow.com.

5. Solder Reflow Profile

The WLA.01 can be assembled by following the recommended soldering temperatures are as follows:

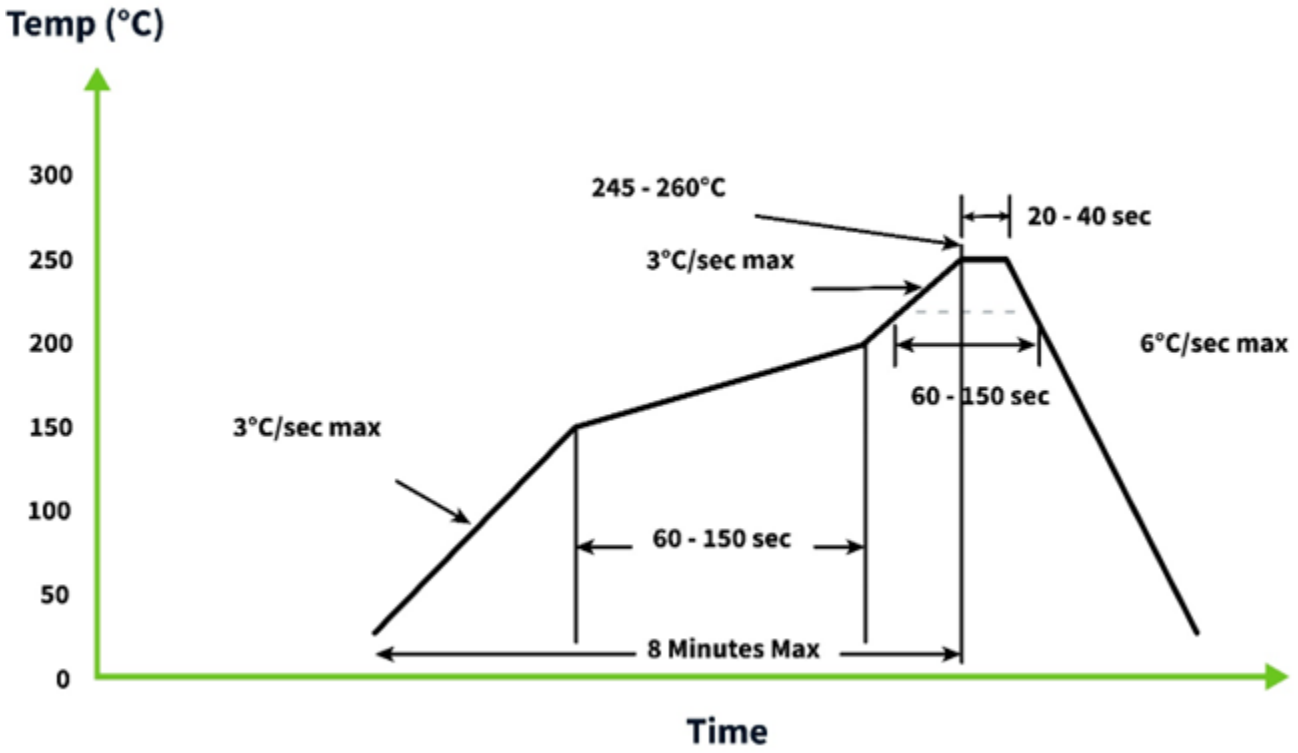

*Temperatures listed within a tolerance of +/- 10º C

Smaller components are typically mounted on the first pass, however, we do advise mounting the WLA.01 when placing larger components on the board during subsequent reflows.

Downloaded from Arrow.com.

6. Packaging

5000pcs WLA.01 per Tape and Reel
Dimensions: Ø330*60mm
Weight: 3.23Kg

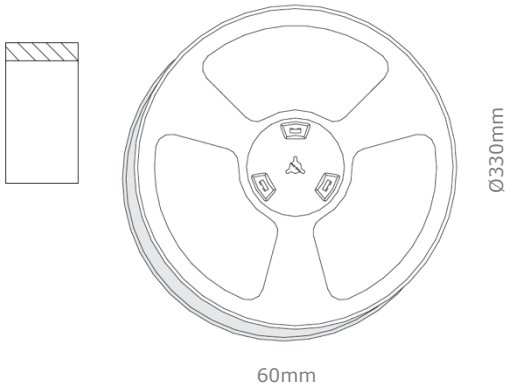

5000pcs WLA.01 per Carton
Dimensions: 340*340*90mm
Weight:3.5Kg

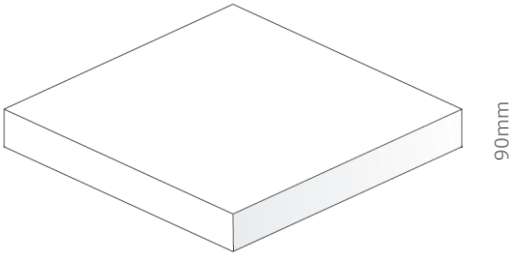

Downloaded from Arrow.com.

7. Antenna Characteristics

7.1 Test Setup

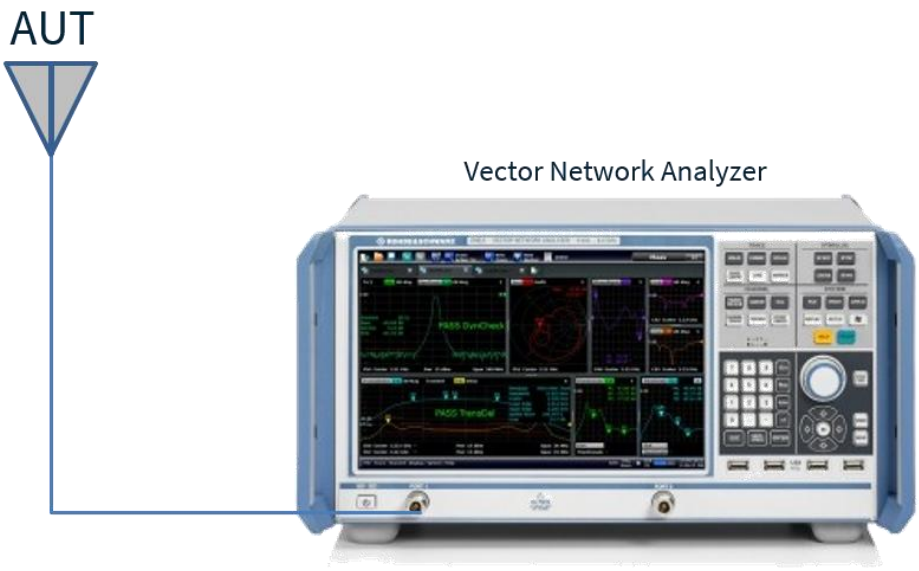

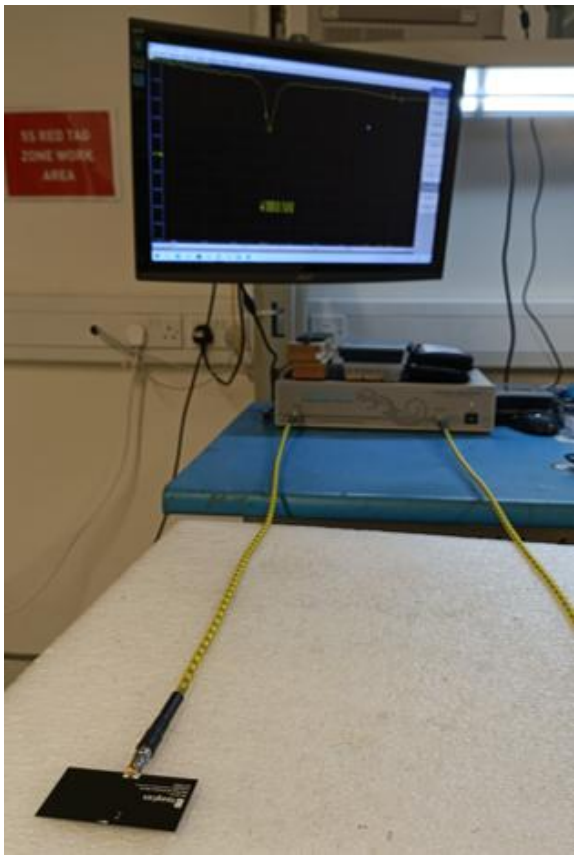

VNA Test Setup on a 80x40mm Ground plane

Downloaded from Arrow.com.

7.2 Return Loss

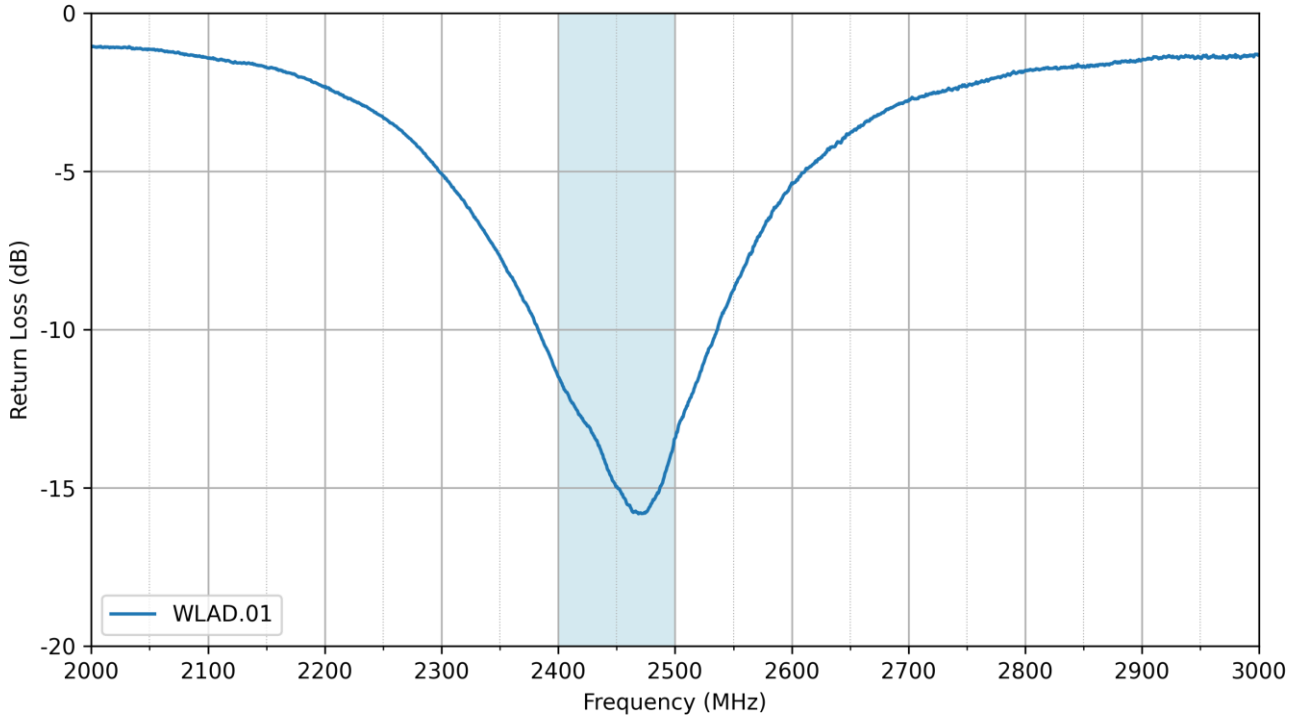

7.3 VSWR

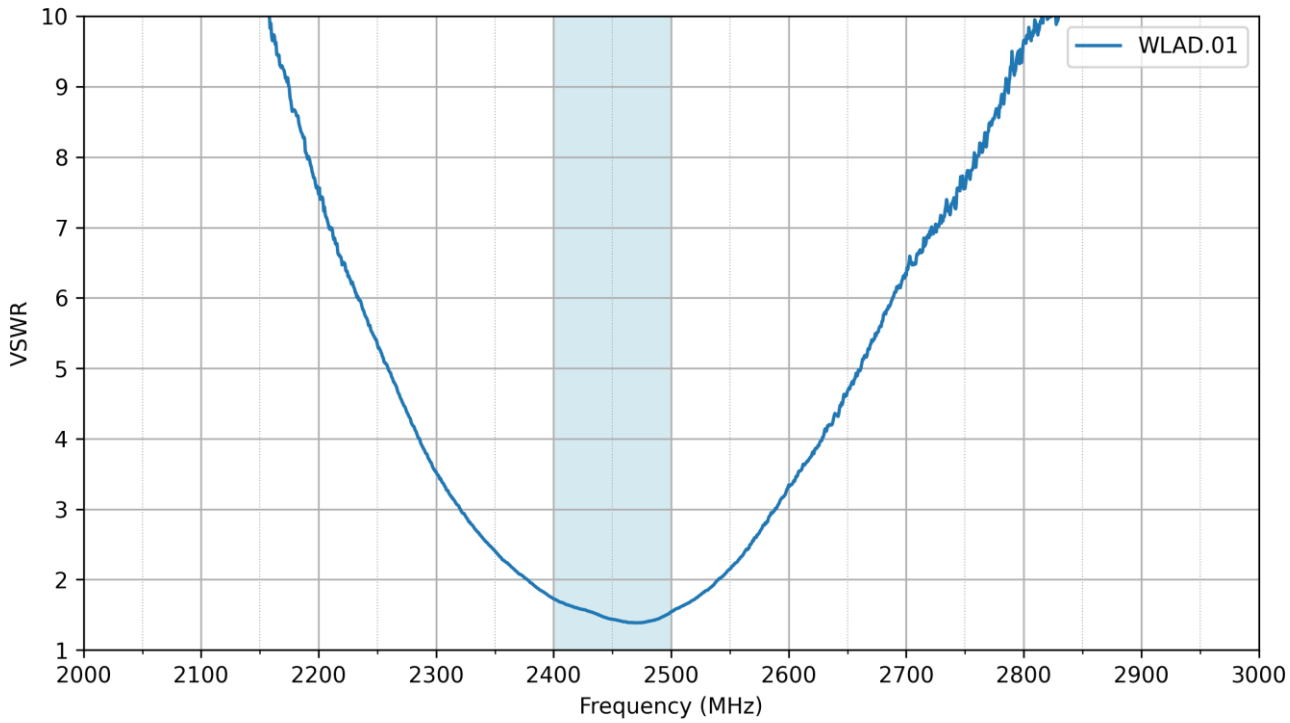

Downloaded from Arrow.com.

7.4 Efficiency

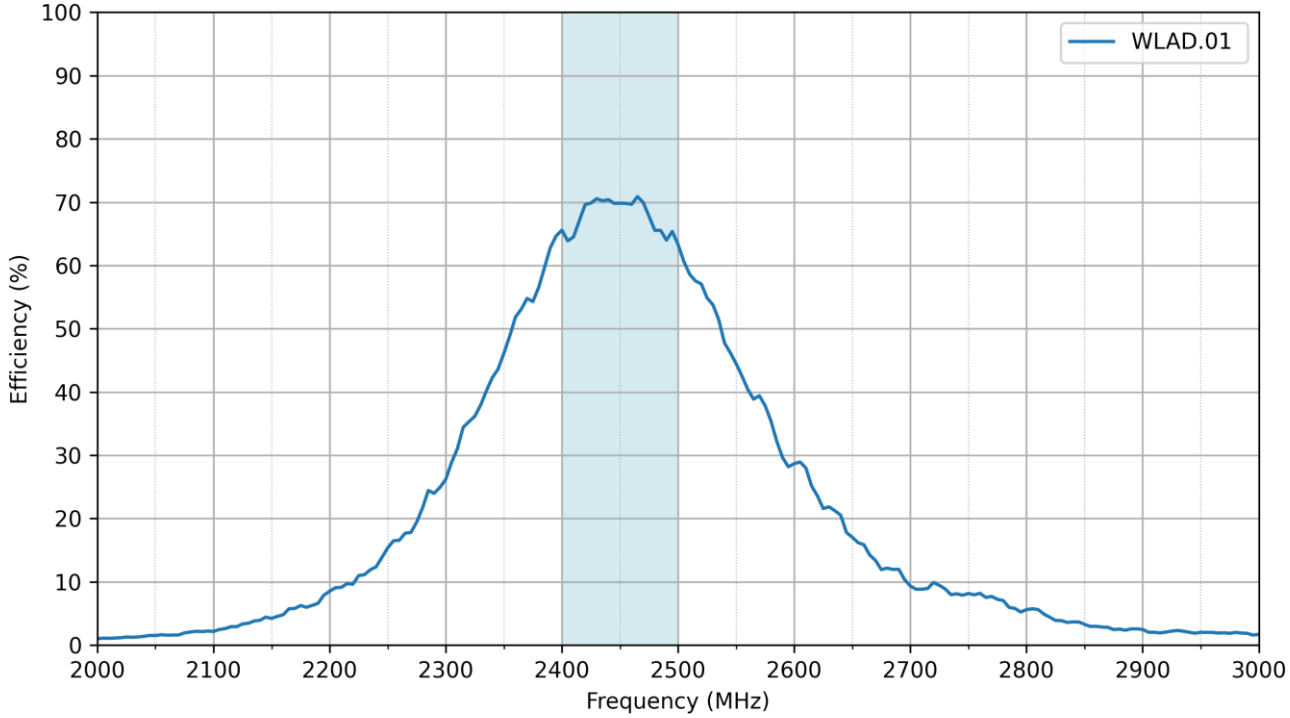

7.5 Average Gain

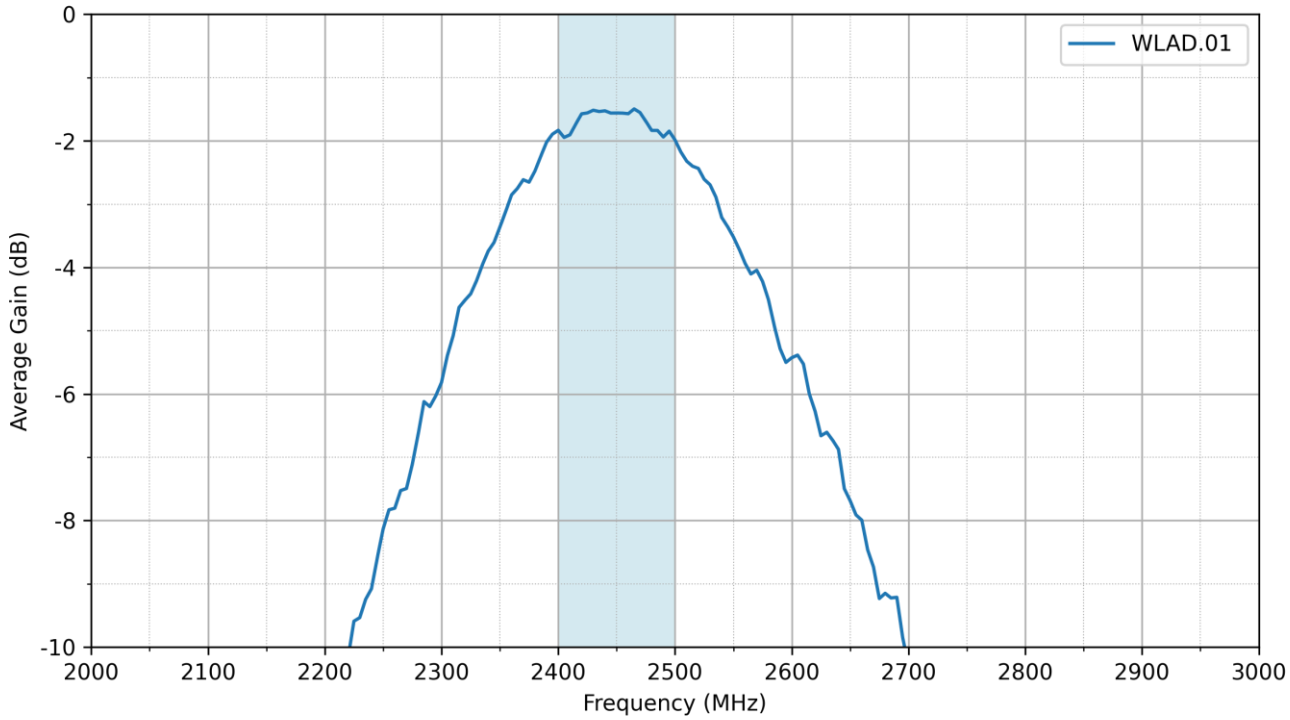

Downloaded from Arrow.com.

7.6 Peak Gain

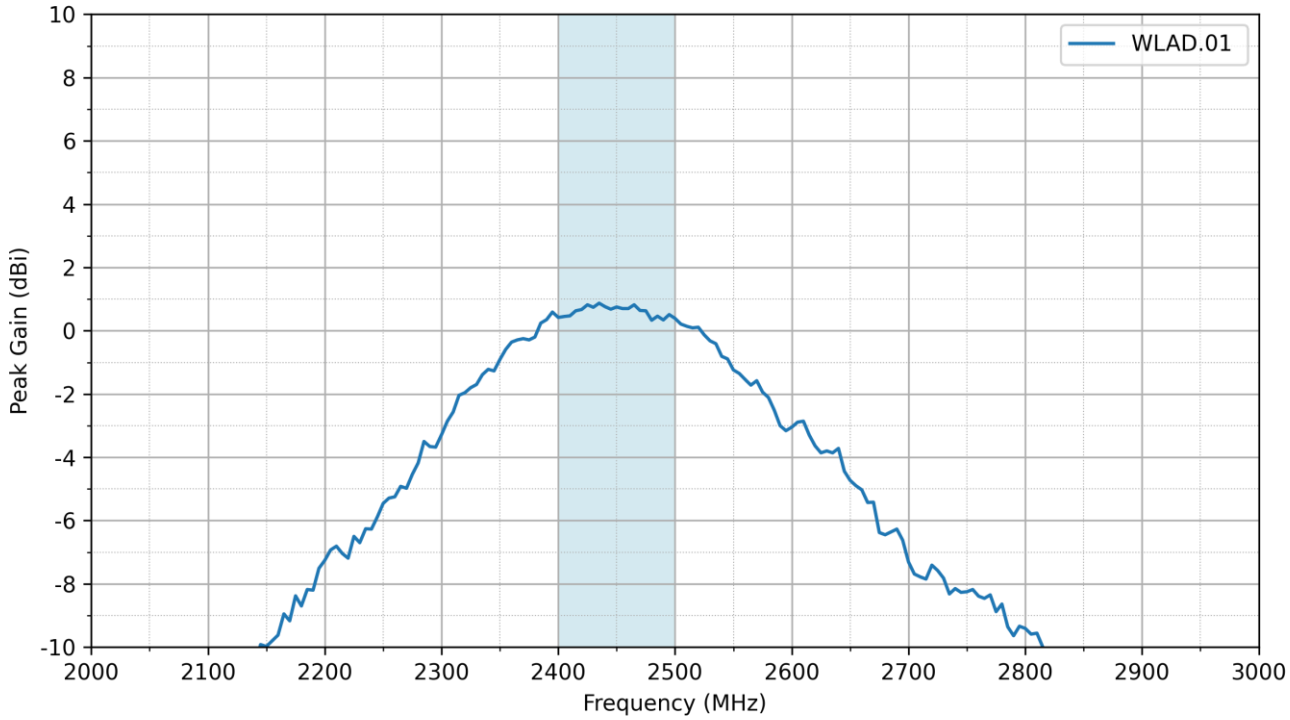

Downloaded from Arrow.com.

8. Radiation Patterns

8.1 Test Setup

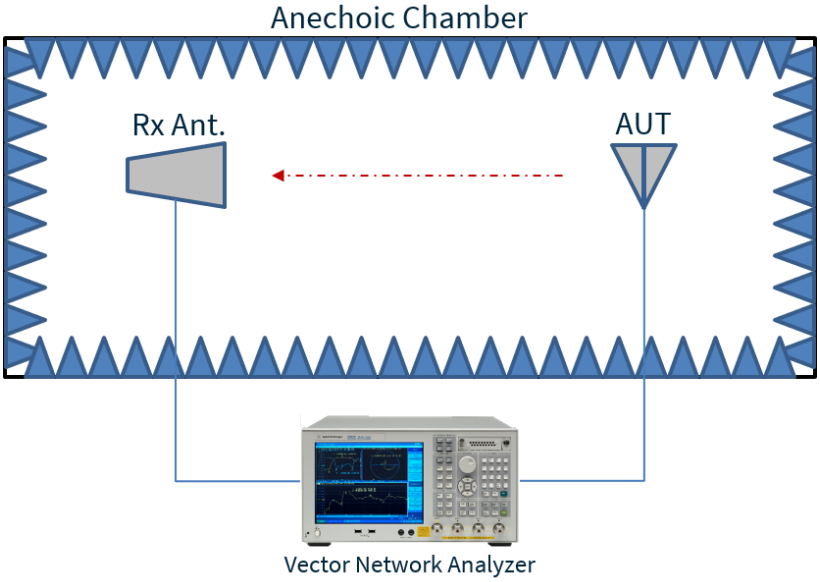

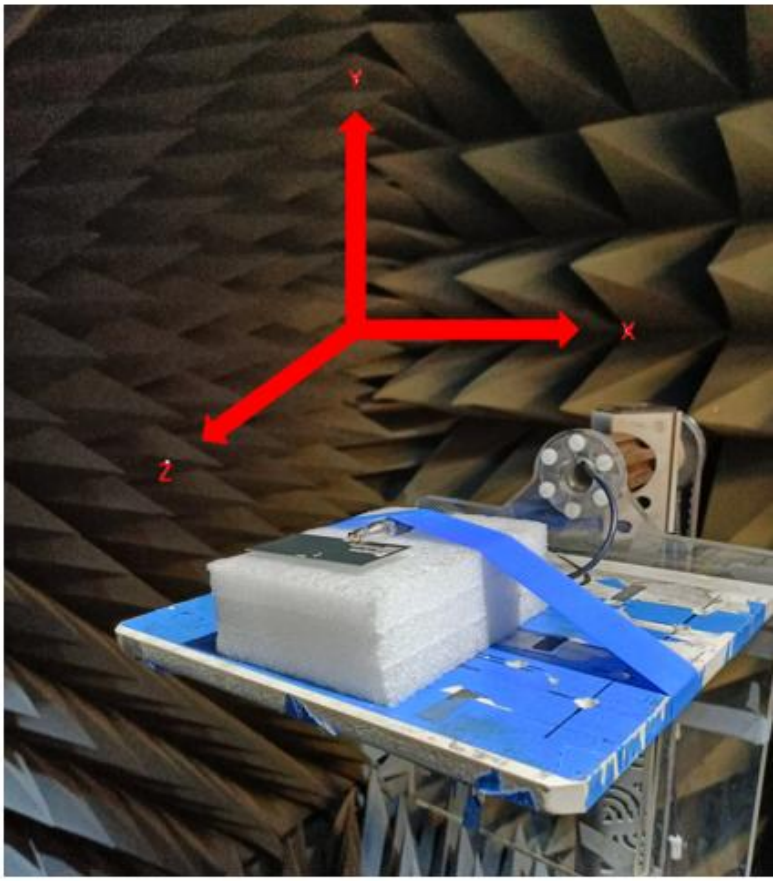

Chamber Test Setup on a 80x40mm Ground plane

Downloaded from Arrow.com.

8.2 Patterns at 2400 MHz

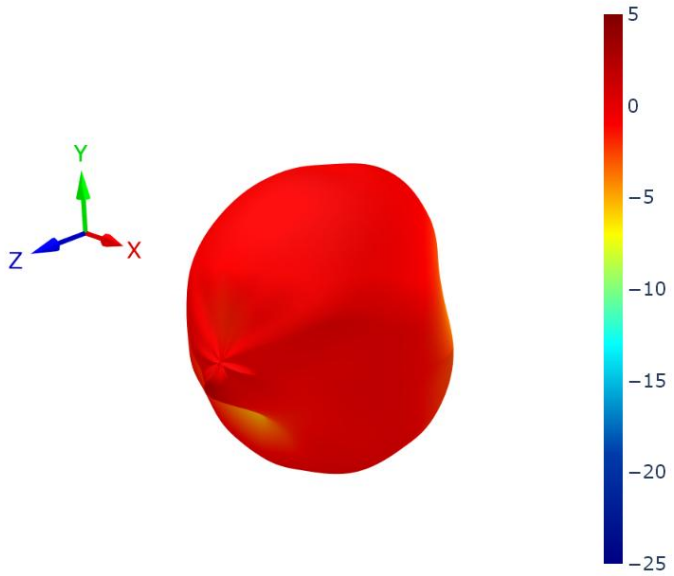

XZ Plane	YZ Plane	XY Plane

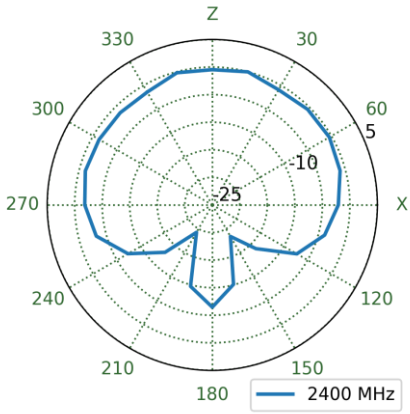

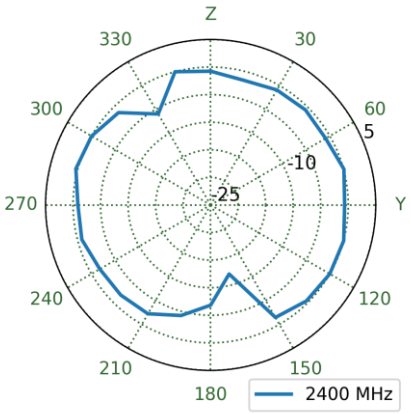

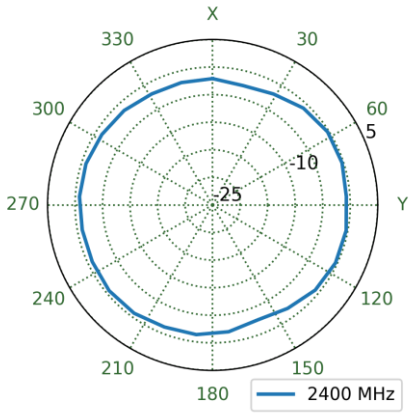

Downloaded from Arrow.com.

8.3 Patterns at 2450 MHz

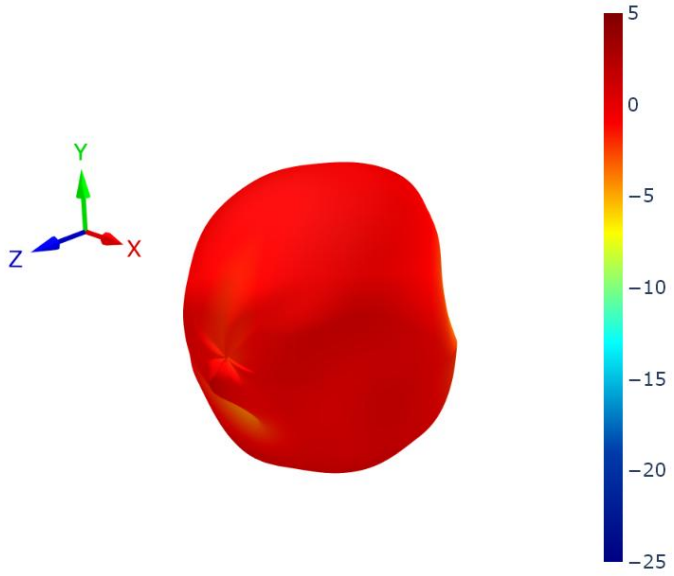

XZ Plane	YZ Plane	XY Plane

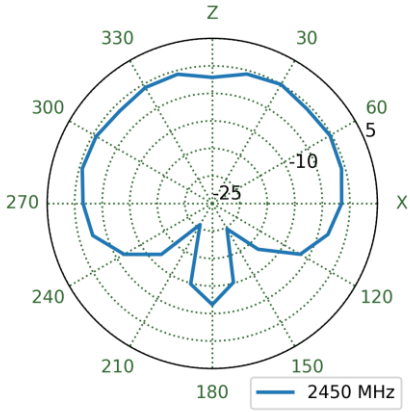

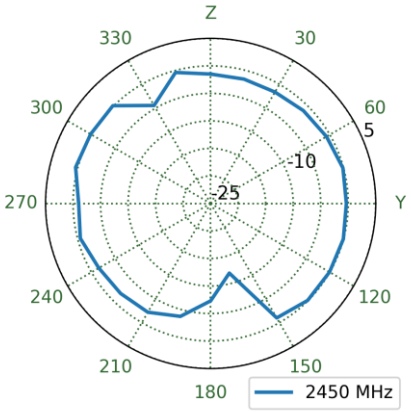

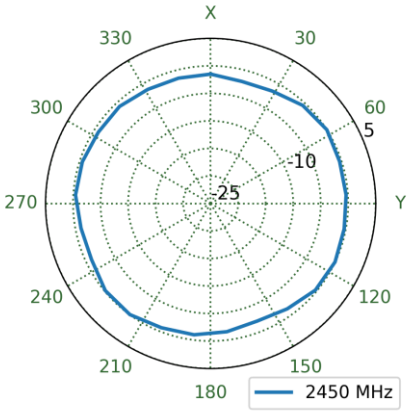

Downloaded from Arrow.com.

8.4 Patterns at 2500 MHz

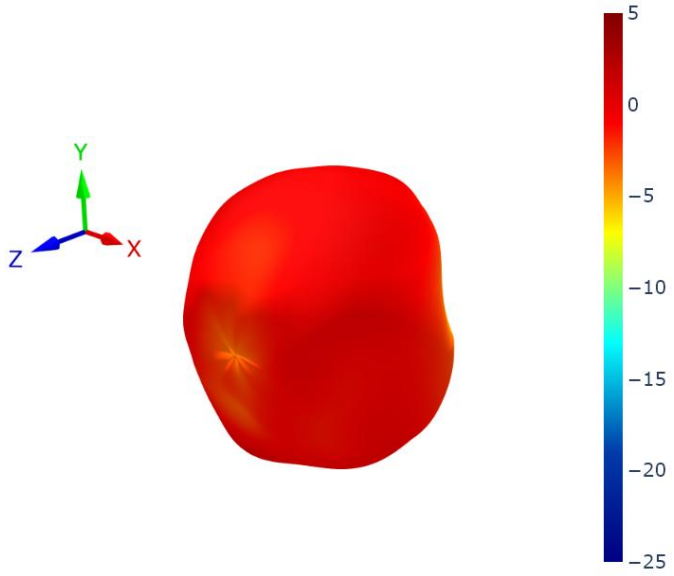

XZ Plane	YZ Plane	XY Plane

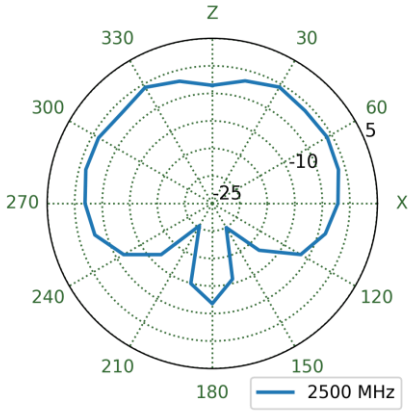

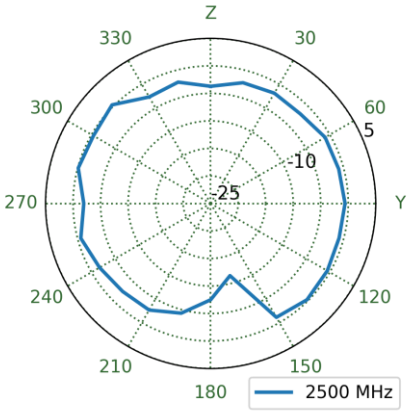

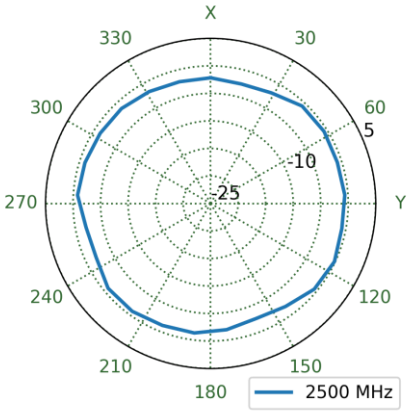

Downloaded from Arrow.com.

9. Application Note

The following is an example on how to integrate the WLA.01 into a corner mount design. This antenna has 3 pins, where one pin is used for the RF Feed. Taoglas recommends using a minimum of 60x30mm ground plane (PCB) to ensure optimal performance.
The antenna should be placed on the corner of the PCB to take advantage of the ground plane on one side of the antenna.

Top view of a Reference Design PCB.

Please find the Integration files in Altium, 2D formats and the 3D model for the WLA.01 here:
https://www.taoglas.com/product/wla-01-2-42-5ghz-ceramic-loop-antenna-3-21-60-5mm-linear-polarized/

Downloaded from Arrow.com.

9.1 Return Loss

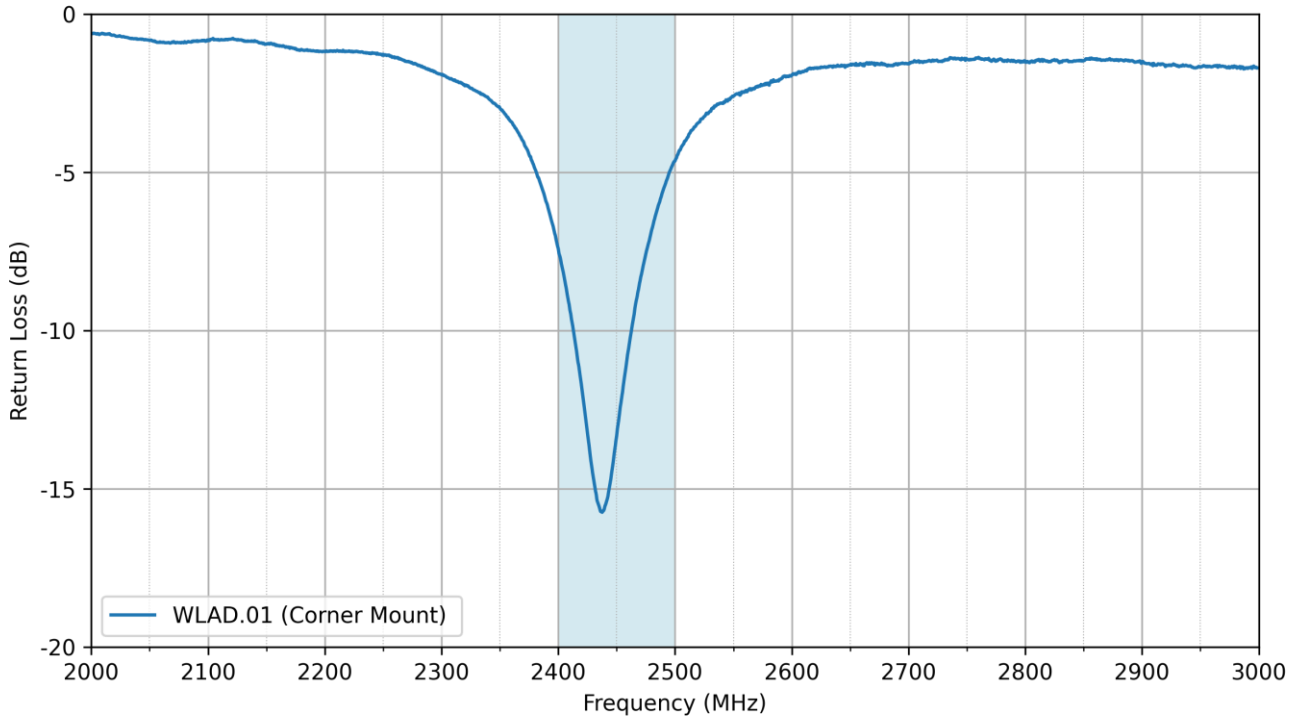

9.2 Efficiency

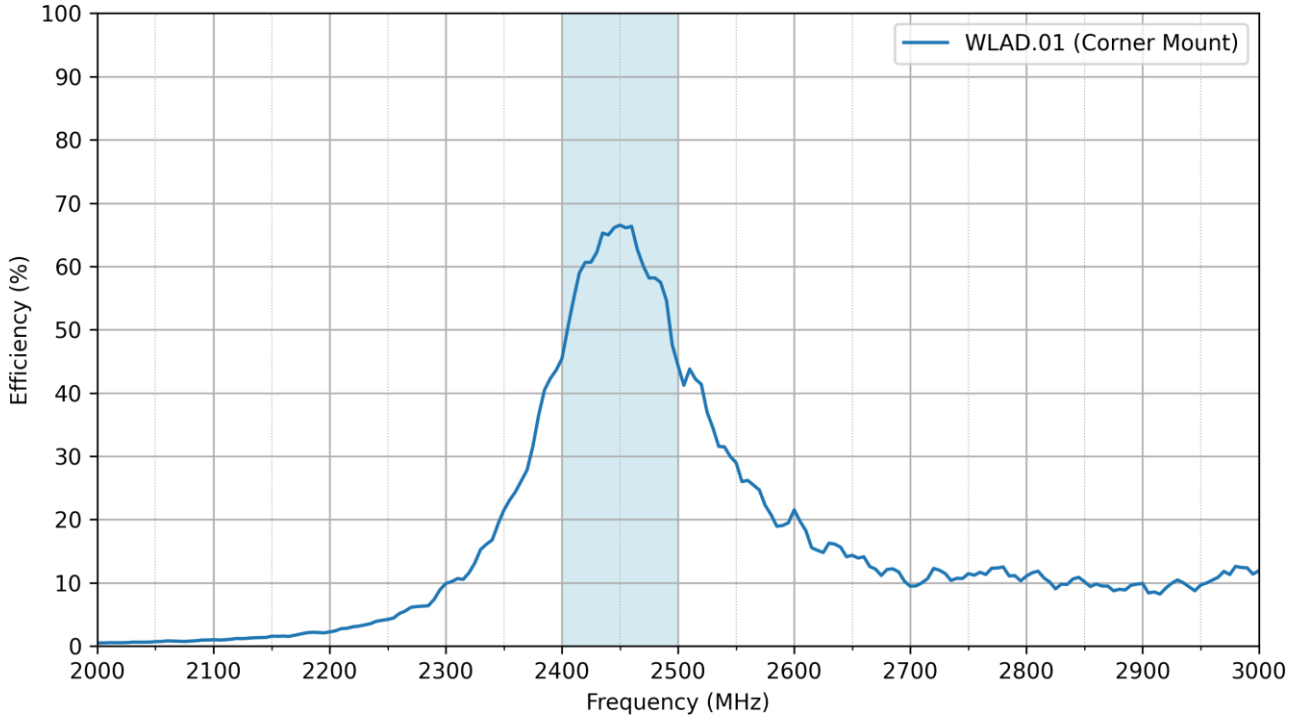

Downloaded from Arrow.com.

9.3 Average Gain

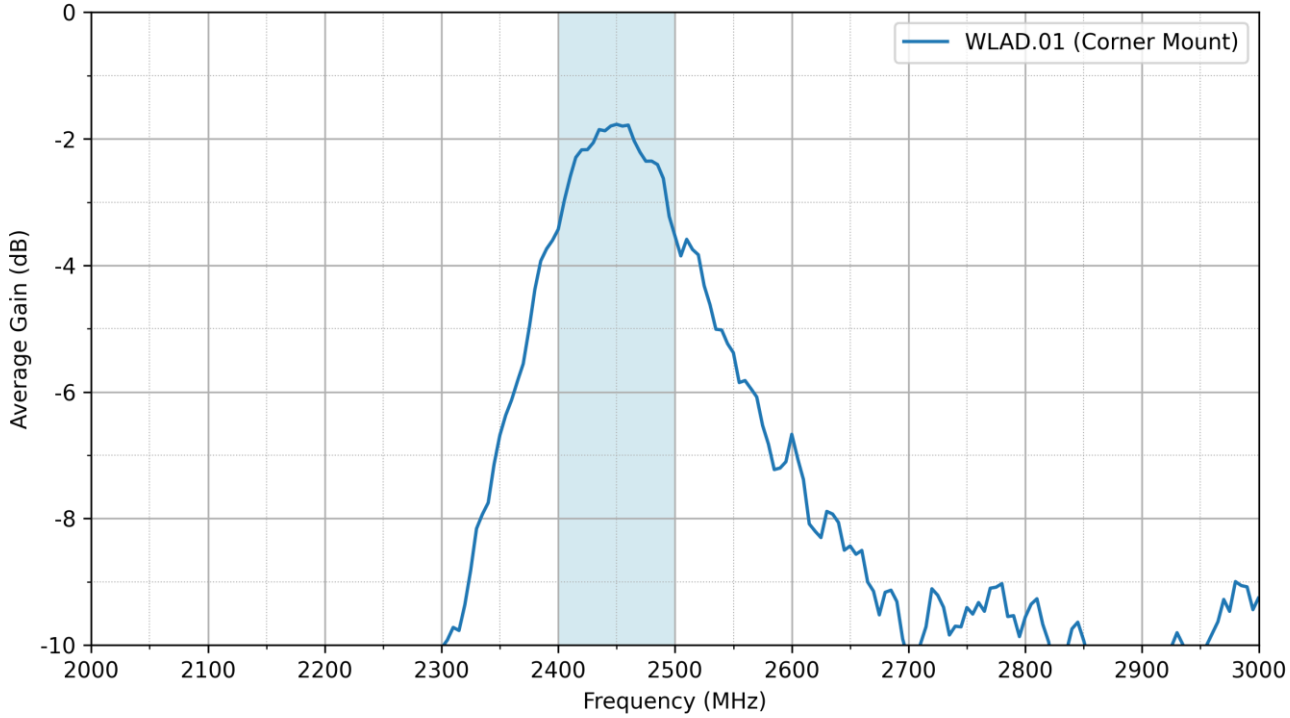

9.4 Peak Gain

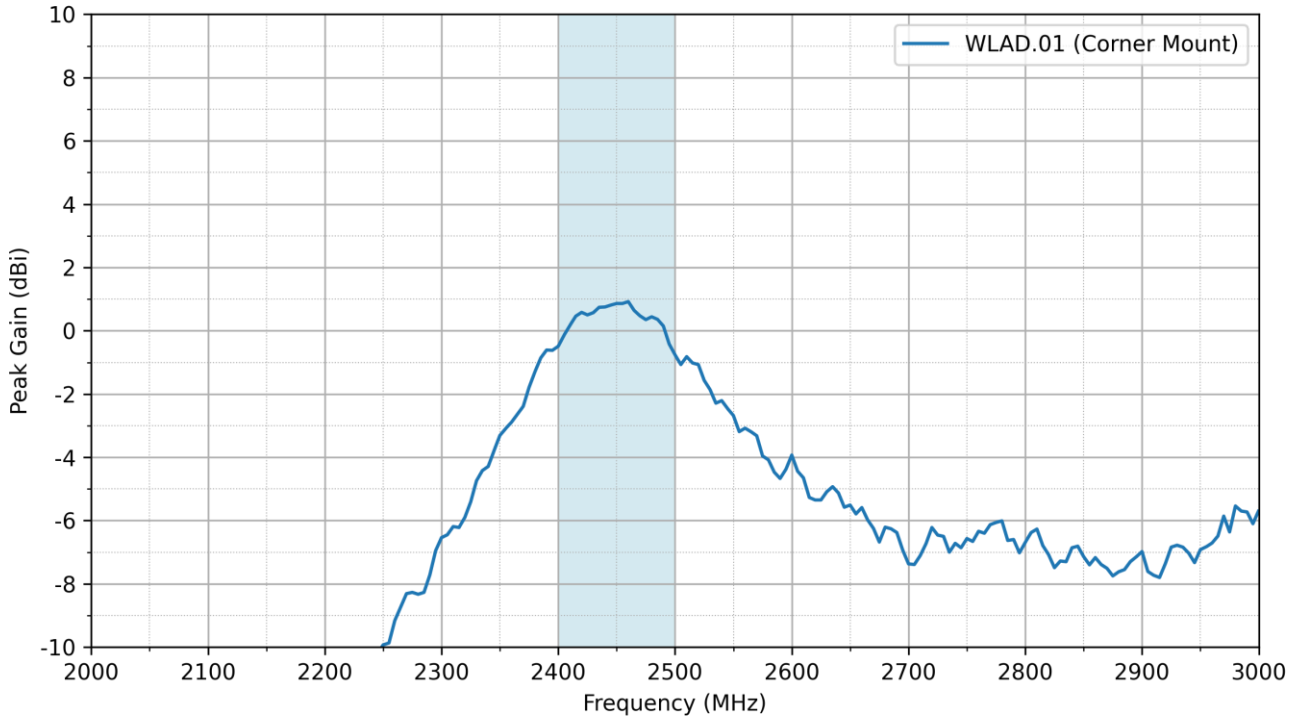

Downloaded from Arrow.com.

9.5 Schematic Symbol and Pin Definitions

The circuit symbol for the WLA.01 is shown below. The antenna has 3 pins as indicated below.

Pin	Description
1	RF Feed
2	Ground
3	Fine Tuning Element

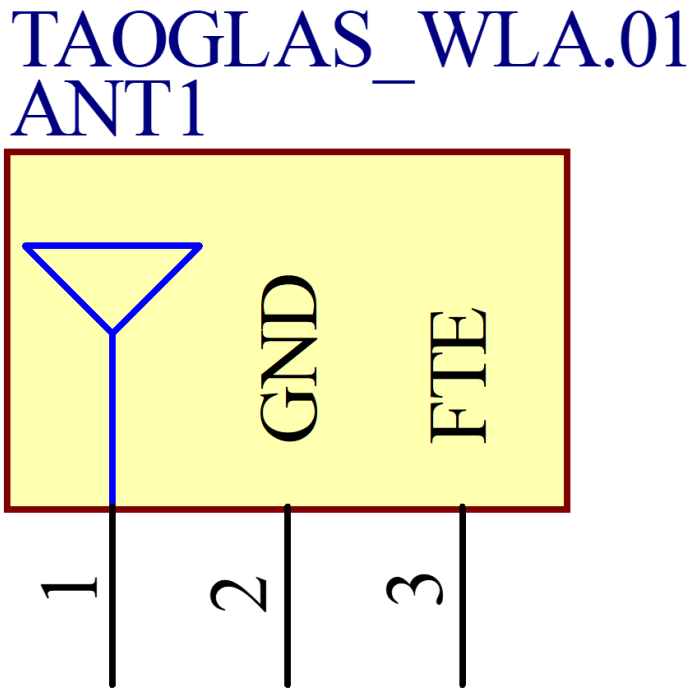

Downloaded from Arrow.com.

9.6 Antenna Footprint

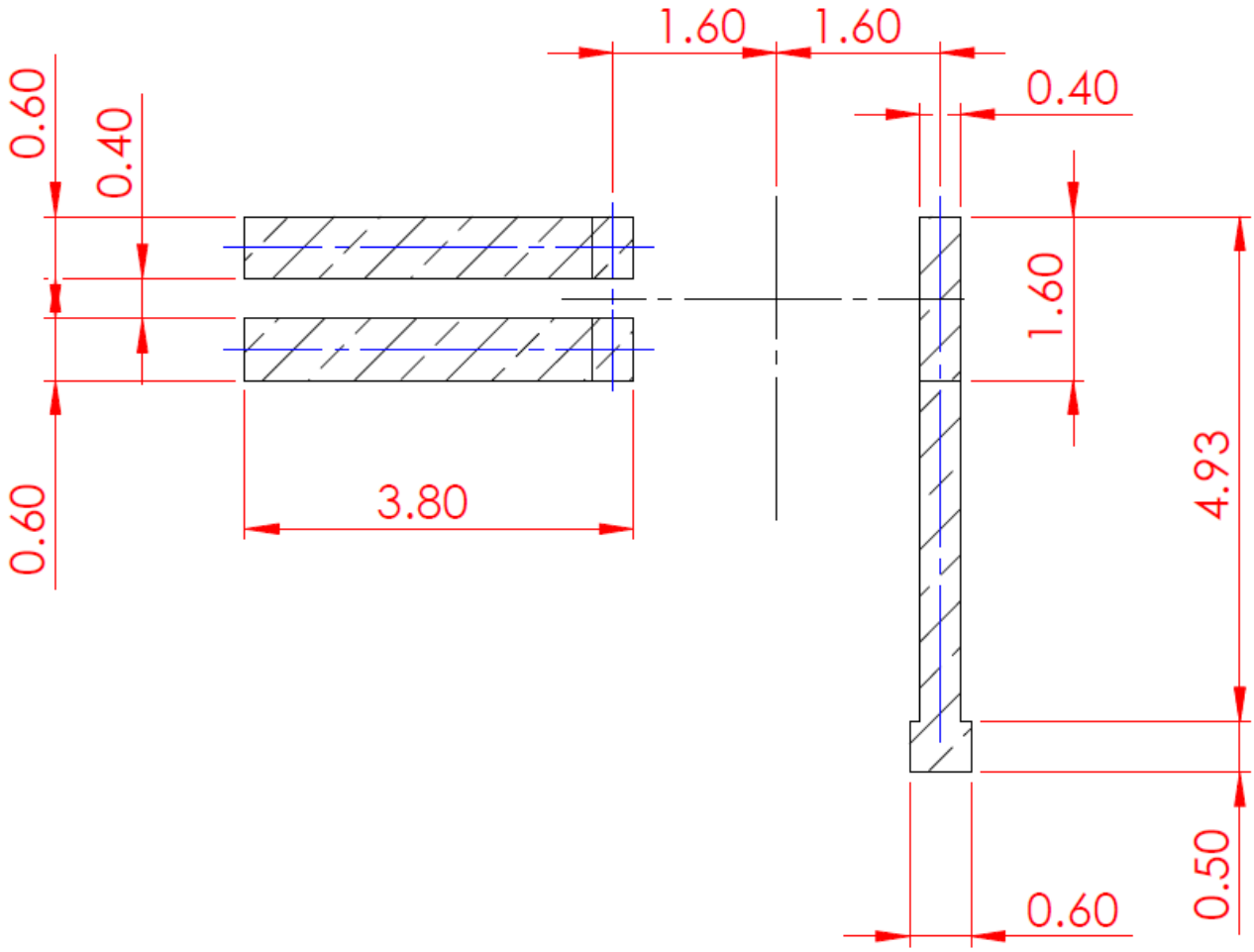

Downloaded from Arrow.com.

9.7 Copper Clearance for WLA.01

The footprint and clearance on the PCB must comply with the antenna's specification. The PCB layout shown in the diagrams below demonstrates the WLA.01 clearance area. The copper keep out area applies to all layers on the PCB.
The copper clearance area extends to 7.7mm in length and in width around the antenna. The PCB edge clearance should be a minimum of 0.1mm, example below is 0.5mm.

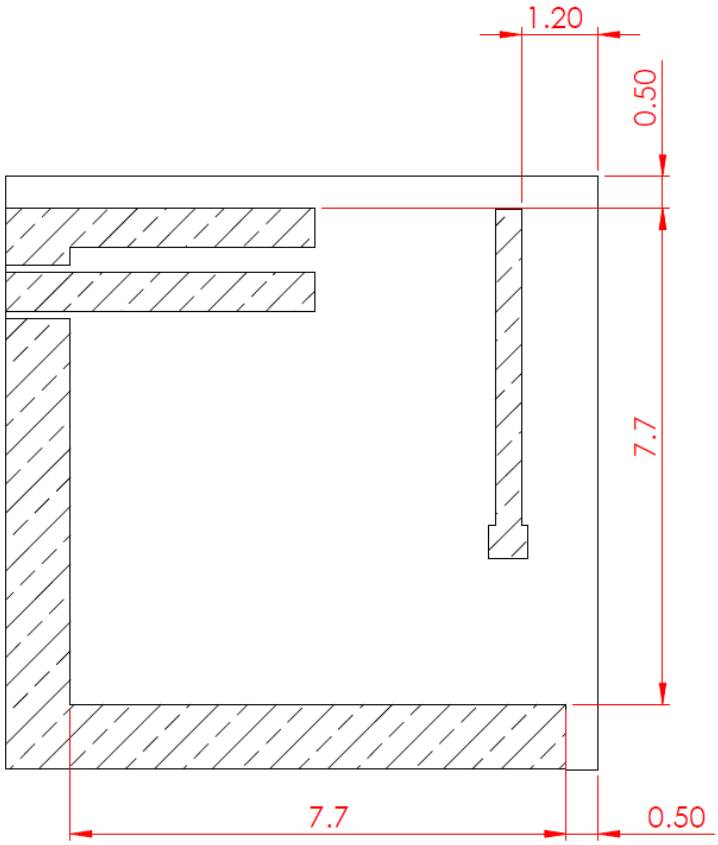

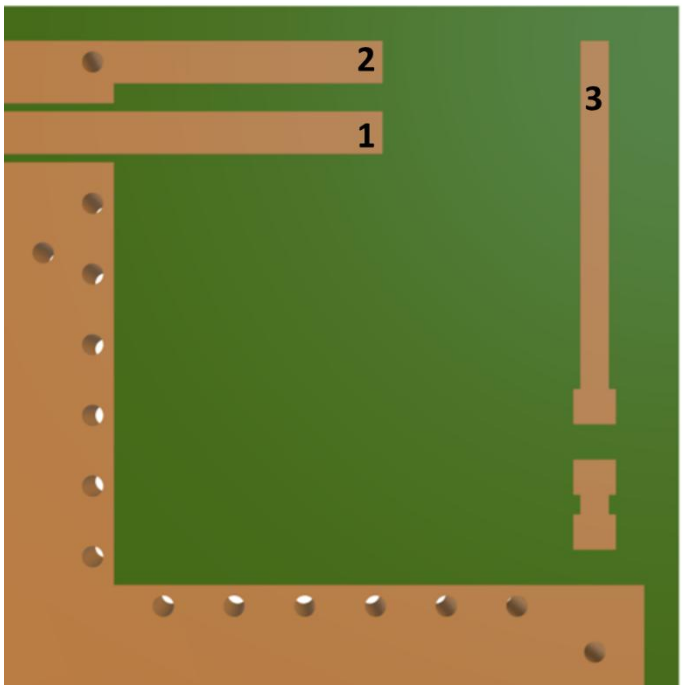

Downloaded from Arrow.com.

9.8 PCB Clearance

Matching components with the WLA.01 are required for the antenna to have optimal performance in the spaces specified in the schematic below. Additional matching components may be necessary for your device, Taoglas recommends incorporating extra component footprints, forming a “pi” network, for the WLA.01.

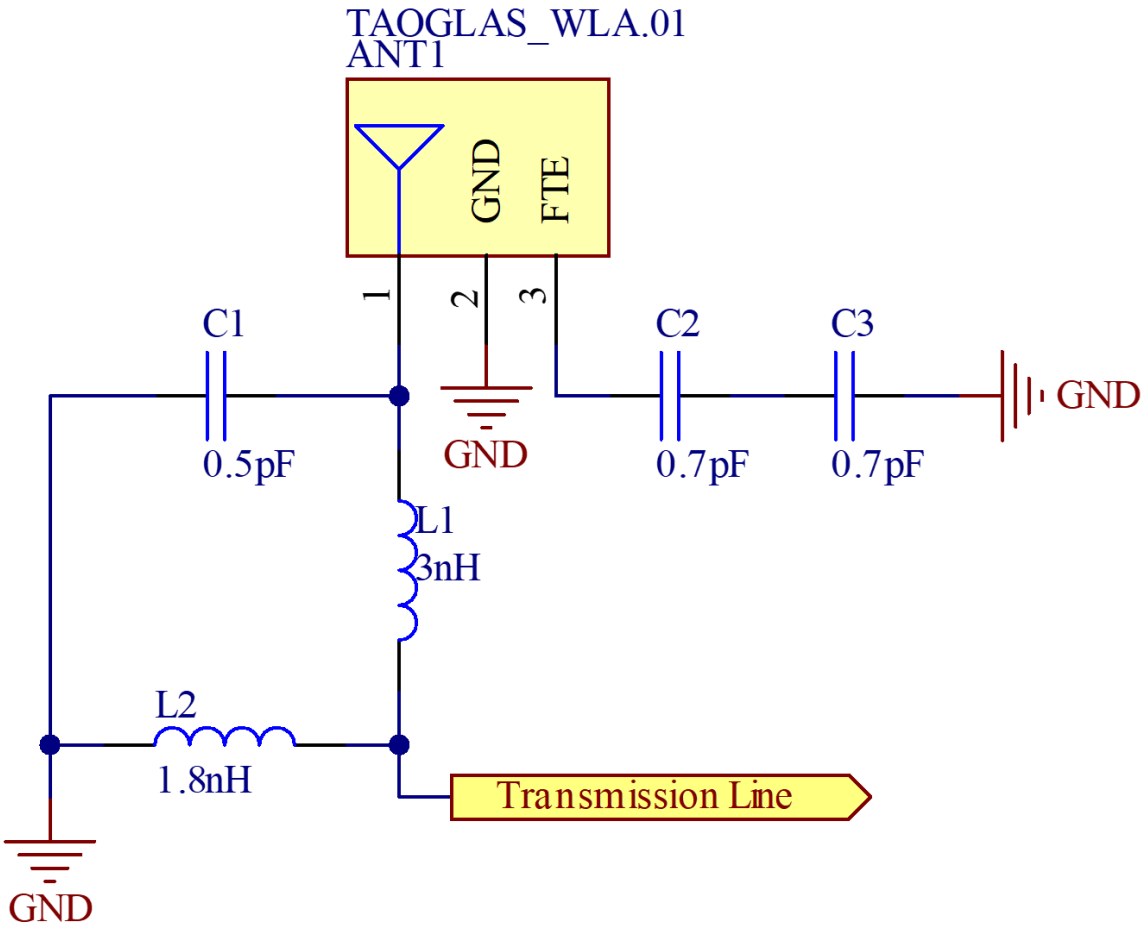

Designator	Type	Value	Manufacturer	Manufacturer Part Number
C1	Capacitor	0.5pF	Murata	GRM1555C1HR50WA01D
C2, C3	Capacitor	0.7pF	Murata	GJM1555C1HR70WB01D
L1	Inductor	3nH	TDK	MHQ1005P3N0BT000
L2	Inductor	1.8nH	TDK	MHQ1005P1N8BT000

Downloaded from Arrow.com.

9.9 Antenna Integration

The antenna should be placed on the corner of the PCB to take advantage of the ground plane on one side of the antenna.
The RF trace must maintain a 50Ω transmission line. A “Pi” Matching Network is recommended for the RF transmission line, the values and components for the matching circuit will depend on the tuning needed.
Ground vias should be placed around the transmission line and the copper clearance area.

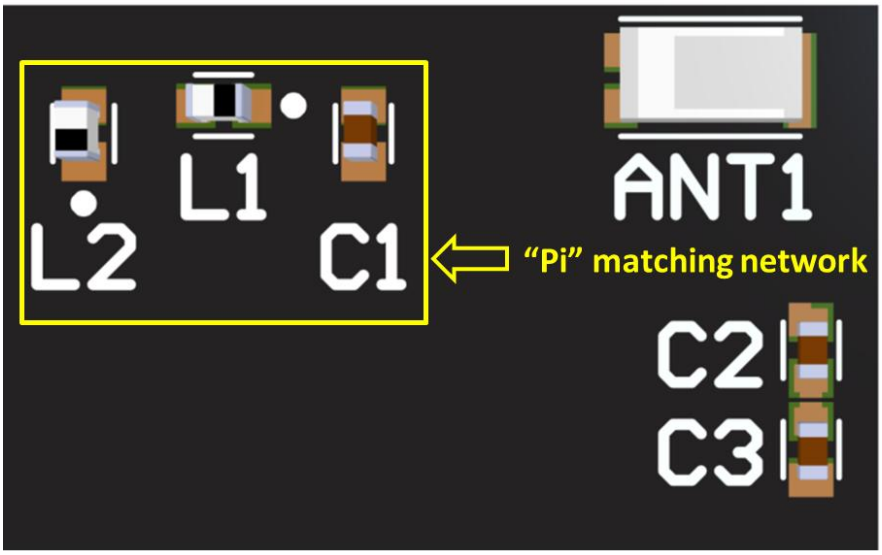

WLA.01 antenna mounted on a PCB, showing “Pi” matching network.

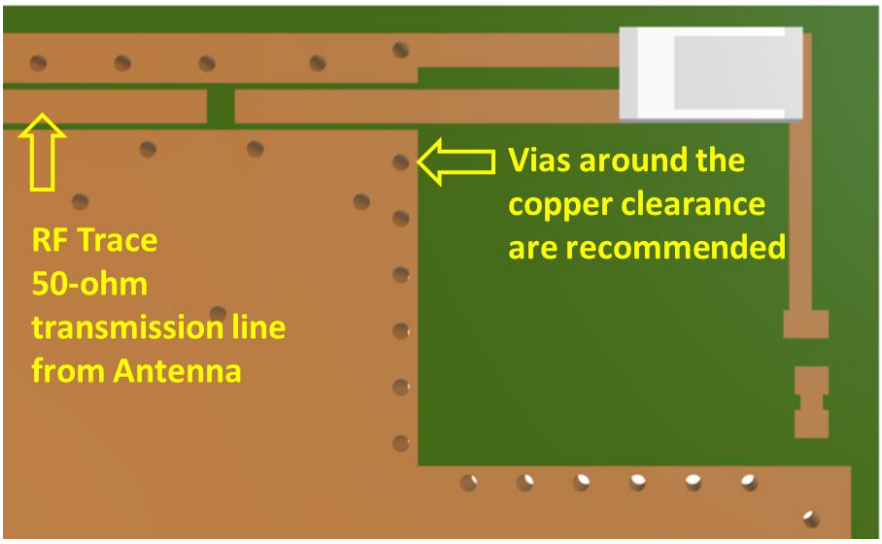

WLA.01 antenna mounted on a PCB, showing transmission line and integration notes.

Downloaded from Arrow.com.

9.10 Final Integration

The top side image shown below highlights the antenna transmission line. Taoglas recommends using a minimum of 60x30mm ground plane (PCB) to ensure optimal performance.

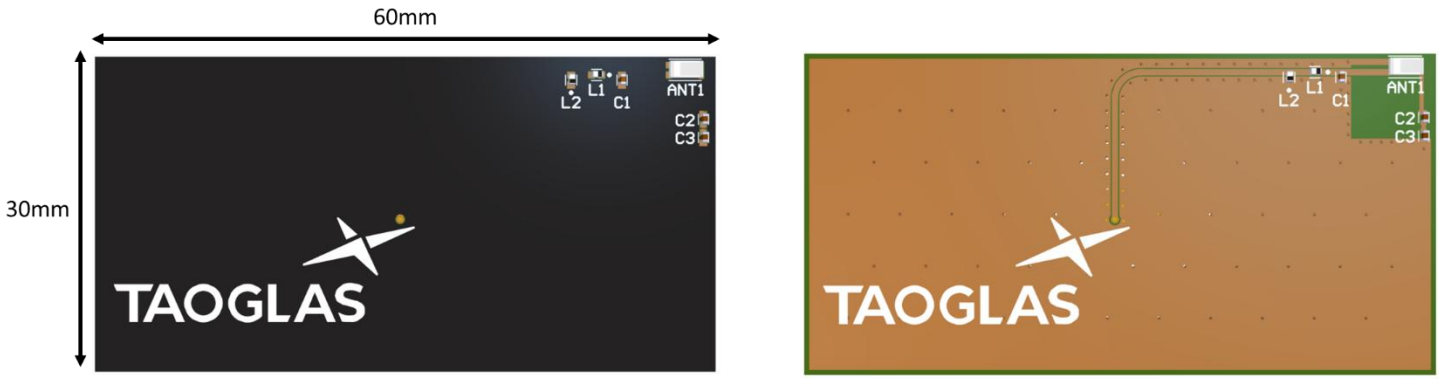

Top Side (WLA.01 placement on 60x30mm Reference Design PCB)

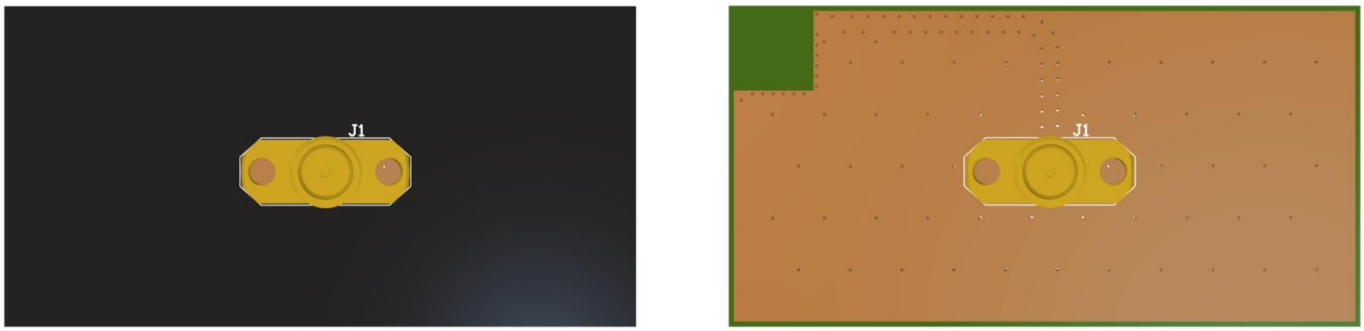

Bottom Side (60x30mm Reference Design PCB)

Downloaded from Arrow.com.

Changelog for the datasheet

SPE-11-8-146 – WLA.01

Revision: V (Current Version)	
Date:	2024-02-01
Changes:	Updated integration guide and app note, Updated datasheet flow.
Changes Made by:	Gary West

Previous Revisions

Revision: U	
Date:	2024-02-01
Changes:	Updated packaging information
Changes Made by:	Cesar Sousa

Revision: P	
Date:	2022-07-05
Changes:	Updated Footprint ME drawing.
Changes Made by:	Gary West

Revision: T	
Date:	2023-11-09
Changes:	Full datasheet update.
Changes Made by:	Gary West

Revision: O	
Date:	2022-01-14
Changes:	Updated Antenna Integration Guide
Changes Made by:	Gary West

Revision: S	
Date:	2023-09-06
Changes:	Updated Solder Reflow Information
Changes Made by:	Cesar Sousa

Revision: N	
Date:	2021-10-18
Changes:	Full datasheet template update, Retested antenna and populated graphs, Added MSL to spec table & Added antenna integration guide.
Changes Made by:	Gary West

Revision: R	
Date:	2023-02-20
Changes:	Updated Electrical Specifications
Changes Made by:	Cesar Sousa

Revision: M	
Date:	2019-08-27
Changes:	Updated drawings, packaging and overall typography
Changes Made by:	Russell Meyler

Revision: Q	
Date:	2023-01-02
Changes:	Updated Specifications
Changes Made by:	Cesar Sousa

Revision: L	
Date:	2018-09-10
Changes:	
Changes Made by:	Jack Conroy

Downloaded from Arrow.com.

Previous Revisions (Continued)

Revision: K	
Date:	2016-12-20
Changes:	Updated drawing as per PCN-80
Changes Made by:	Andy Mahoney

Revision: J	
Date:	2016-09-28
Changes:	Amended drawing to make clearer that only certain pads should be connected to GND
Changes Made by:	Jack Conroy

Revision: I	
Date:	2016-09-13
Changes:	
Changes Made by:	Technical Writer

Revision: H	
Date:	2015-08-21
Changes:	Added note on gain
Changes Made by:	Aine Doyle

Revision: G	
Date:	2014-07-23
Changes:	Updated Frequency Page 3
Changes Made by:	Aine Doyle

Revision: F	
Date:	2014-07-14
Changes:	Added in Solder details
Changes Made by:	Aine Doyle

Revision: E	
Date:	2014-04-23
Changes:	Amended 6.2 Mtaching component table
Changes Made by:	Aine Doyle

Revision: D	
Date:	2014-01-31
Changes:	Amended drawings of EVB
Changes Made by:	Aine Doyle

Revision: C	
Date:	2012-06-27
Changes:	
Changes Made by:	Technical Writer

Revision: B	
Date:	2012-12-01
Changes:	
Changes Made by:	Technical Writer

Revision: A (Original First Release)	
Date:	2011-11-30
Notes:	First Release
Author:	Technical Writer

Downloaded from Arrow.com.

TAOGLAS

TAOGLAS®

www.taoglas.com

Downloaded from Arrow.com.