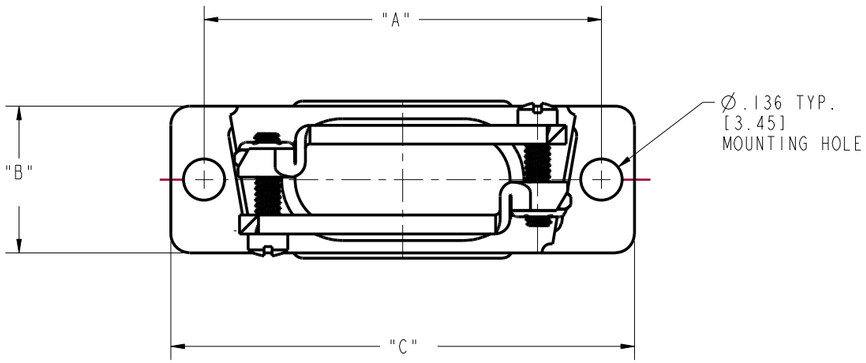

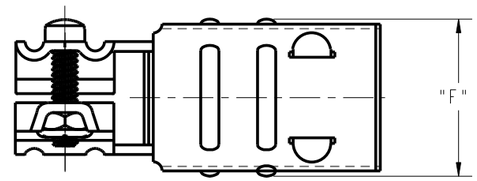

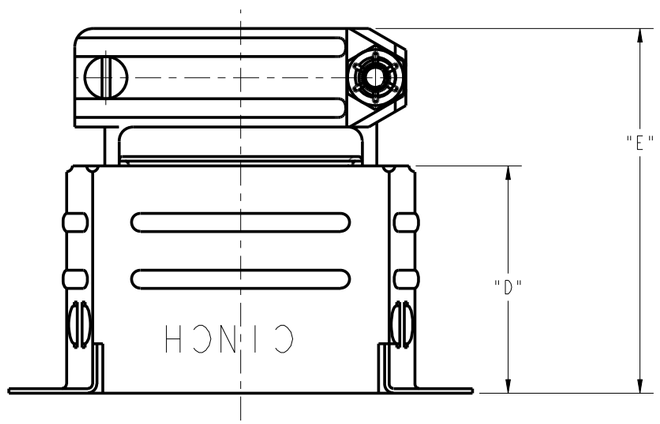

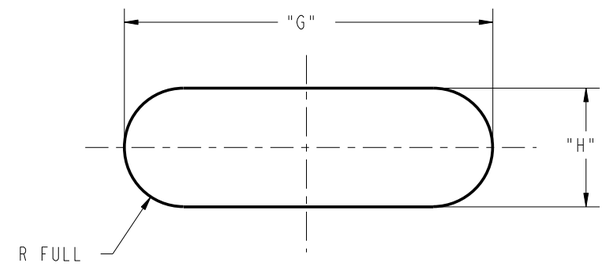

SHELL CABLE OPENING

NOTES:

1. MATERIALS:

   SHELL: STEEL, PLATING ZINC WITH CLEAR CHROMATE.

   CLAMP: STEEL, PLATING ZINC WITH CLEAR CHROMATE.

   SCREW: STEEL, PLATING ZINC WITH CLEAR CHROMATE.

   NUT: BRASS OR STEEL, PLATING ZINC WITH CLEAR CHROMATE.

2. DIMENSIONS IN [ ] ARE IN MILLIMETERS.

CATALOG NUMBER	PART NUMBER	DIM "A"	DIM "B"	DIM "C"	DIM "D"	DIM "E"	DIM "F"	DIM "G"	DIM "H"
DE-24657-30	702 49 09 005	.984 [24.99]	.484 [12.29]	1.203 [30.56]	.750 [19.05]	1.219 [30.96]	.578 [14.68]	Ø.375 HOLE [9.53]	
DA-24658-31	702 49 15 005	1.312 [33.32]		1.531 [38.89]		1.250 [31.75]		.719 [18.26]	.312 [7.92]
DB-24659-32	702 49 25 005	1.852 [47.04]		2.078 [52.78]	1.000 [25.40]	1.531 [38.89]		1.000 [25.40]	
DC-24660-33	702 49 37 005	2.500 [63.50]		2.719 [69.06]				1.375 [34.93]	
DD-24661-34	702 49 50 005	2.406 [61.11]	.594 [15.09]	2.625 [66.68]	1.110 [28.19]	1.656 [42.06]	.687 [17.45]	1.406 [35.71]	.406 [10.31]

DRAWING REVISIONS

REV	DOCUMENT	APP	DATE
A	DO 05-1094		

ROHS COMPLIANT

UNITS ENGLISH

DO NOT SCALE DRAWING

[redacted]

THIS DOCUMENT IS THE PROPERTY OF CINCH. NEITHER THIS DOCUMENT NOR ANY OF THE INFORMATION CONTAINED IN IT MAY BE DUPLICATED OR DISCLOSED WITHOUT PRIOR WRITTEN CONSENT OF CINCH.

PRO/E

Cinch

MODELED BY: V.SKUZA

1700 FINLEY RD
LOMBARD, IL. 60148

DRAWN BY: V.SKUZA	DATE: 5/11/05	TITLE: JUNCTION SHELL DEEP STRAIGHT SHELL AND CLAMP ASS'Y	
DESIGN ENGINEER: A.BALI	5/11/05	MATERIAL	CONTROL SPEC NUMBER
DESIGN ENGINEERING MGR.		MATERIAL SPEC NUMBER / FINISH	PROJECT NUMBER: C14716
MFG. ENGINEERING: A.SAUSKAS	5/31/05	CAD FILE NUMBER: DX-246XX-3X	DRAWING NUMBER: D*-246XX-3X
QUALITY ASSURANCE: A.VAZQUEZ	5/31/05	CAGE IDENT NO.: 71785 / SIZE: B	SCALE: 2:1 / SHEET 1 OF 1

Downloaded from Arrow.com.