SERIES: PSK-30D | **DESCRIPTION:** INTERNAL AC-DC POWER SUPPLY

FEATURES

- wide input range (85 ~ 305 Vac)
- wide operating temperature range (-40 to +85 C)
- Class B emissions
- certified to 62368, 61558, and 60335 safety standards
- over voltage, over current, short circuit protections
- input over voltage category III for fixed installations

MODEL	output voltage (Vdc)	output current max (A)	output power max (W)	ripple and noise[1] max (mVp-p)	efficiency[2] typ (%)
PSK-30D-3	3.3	6.0	19.8	100	85
PSK-30D-5	5	6.0	30.0	100	86
PSK-30D-9	9	3.4	30.6	100	88
PSK-30D-12	12	2.5	30.0	100	90
PSK-30D-15	15	2.0	30.0	100	90
PSK-30D-24	24	1.3	31.2	150	88
PSK-30D-48	48	0.63	30.2	150	90

Notes: 1. At full load, nominal input, 20 MHz bandwidth oscilloscope, with 1 µF ceramic and 10 µF electrolytic capacitors on the output.
2. At 230 Vac input.
3. All specifications are measured at Ta=25°C, humidity <75%, nominal input voltage, and rated output load unless otherwise specified.

PART NUMBER KEY

PSK - 30D - XX - X

- PSK - 30D: Base Number
- XX: Output Voltage
- X: Mounting Style:
  blank = board mount
  T = chassis mount
  DIN = DIN-rail mount

Please read our datasheet & drawing disclaimer here.

Downloaded from Arrow.com.

INPUT

parameter	conditions/description	min	typ	max	units
voltage	ac input dc input (3.3/5/9/12/15/24 Vdc output models) dc input (48 Vdc output model)	85 100 120		305 430 430	Vac Vdc Vdc
frequency		47		63	Hz
current	at 115 Vac at 230 Vac			0.75 0.5	A A
inrush current	at 115 Vac at 230 Vac		25 50		A A
leakage current	at 277 Vac/50 Hz			0.1	mA

OUTPUT

parameter	conditions/description	min	typ	max	units
capacitive load	3.3 Vdc output model 5 Vdc output model 9 Vdc output model 12 Vdc output model 15 Vdc output model 24 Vdc output model 48 Vdc output model			6,600 6,600 4,400 4,400 3,300 1,000 470	µF µF µF µF µF µF µF
output voltage accuracy	3.3 Vdc output model all other output models		±3 ±2		% %
line regulation	at full load		±0.5		%
load regulation	0~100% load 3.3 Vdc output model 5 Vdc output model all other output models		 ±2 ±1.5 ±1		 % % %
hold-up time	at 115 Vac at 230 Vac		10 50		ms ms
switching frequency			65		kHz
no load power consumption	at 230 Vac 3.3, 9, 12, 15, 24 Vdc output model 5 Vdc output model 48 Vdc output model			 0.1 0.3 0.15	 W W W

PROTECTIONS

parameter	conditions/description	min	typ	max	units
over voltage protection	output voltage hiccup 3.3 Vdc output model 5, 9, 12 Vdc output model 15 Vdc output model 24 Vdc output model 48 Vdc output model			 6.3 16 25 35 60	 Vdc Vdc Vdc Vdc Vdc
over current protection	auto recovery	110			%
short circuit protection	continuous, auto recovery, hiccup				

SAFETY & COMPLIANCE

parameter	conditions/description	min	typ	max	units
isolation voltage	input to output, 1 min., <5mA	4,200			Vac
safety approvals	certified to 62368: EN, UL certified to 60335: EN certified to 61558: EN				
safety class	Class II				
EMI/EMC	CISPR32/EN55032 CLASS B EN55014-1				

Downloaded from Arrow.com.

SAFETY & COMPLIANCE

ESD	IEC/EN61000-4-2 Contact ±8KV/Air ±15KV, perf. Criteria A IEC/EN55014-2, perf. Criteria A		
radiated immunity	IEC/EN61000-4-3 10V/m, perf. Criteria A IEC/EN55014-2, perf. Criteria A		
EFT/burst	IEC/EN61000-4-4 ±2KV, perf. Criteria A IEC/EN61000-4-4 ±4KV (See Fig.2 for recommended circuit), perf. Criteria A IEC/EN55014-2, perf. Criteria A		
surge	IEC/EN61000-4-5 line to line ±2KV, perf. Criteria A IEC/EN61000-4-5 line to line ±2KV/line to ground ±4KV (See Fig.2 for recommended circuit), perf. Criteria A IEC/EN55014-2, perf. Criteria A		
conducted immunity	IEC/EN61000-4-6 10 Vr.m.s, perf. Criteria A IEC/EN55014-2, perf. Criteria A		
voltage dips and interruption	IEC/EN61000-4-11 0%, 70%, perf. Criteria B IEC/EN55014-2, perf. Criteria B		
MTBF	MIL-HDBK-217F at 25°C	500,000	hours
RoHS	yes		

ENVIRONMENTAL

parameter	conditions/description	min	typ	max	units
operating temperature		-40		85	°C
storage temperature		-40		85	°C
storage humidity		0		95	%

SOLDERABILITY

parameter	conditions/description	min	typ	max	units
wave soldering	5~10 seconds max	255	260	265	°C
hand soldering	3~5 seconds max	350	360	370	°C

MECHANICAL

parameter	conditions/description	min	typ	max	units
dimensions	DIP: 69.50 x 39.00 x 24.00 chassis mount: 96.10 x 54.00 x 32.50 DIN-rail: 96.10 x 54.00 x 37.10				mm mm mm
weight	DIP chassis mount DIN-rail		100 147 190		g g g
case material	Black plastic, flame-retardant and heat-resistant (UL94V-0)				
cooling method	natural convection				

Downloaded from Arrow.com.

MECHANICAL DRAWING

Board mount

units: mm [inch]
pin diameter tolerance: ±0.10 [±0.004]
tolerance: ±0.50 [±0.020]

PIN CONNECTIONS	
PIN	Function
1	AC(L)
2	AC(N)
3	+Vo
4	-Vo

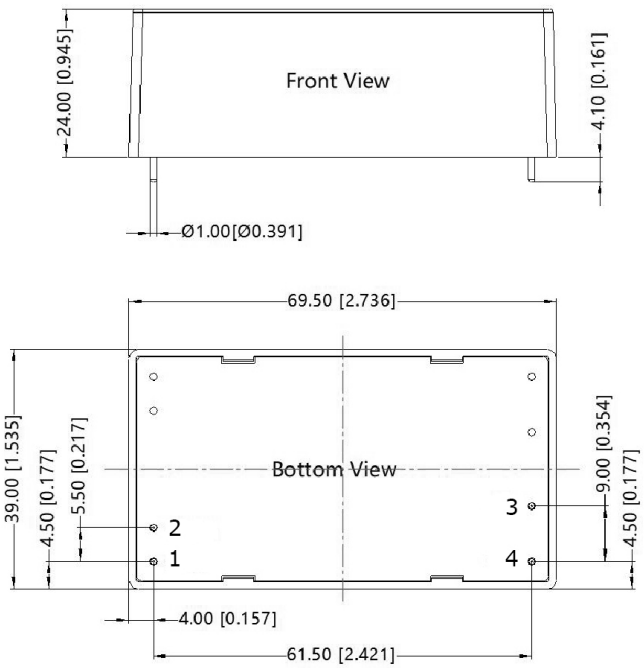

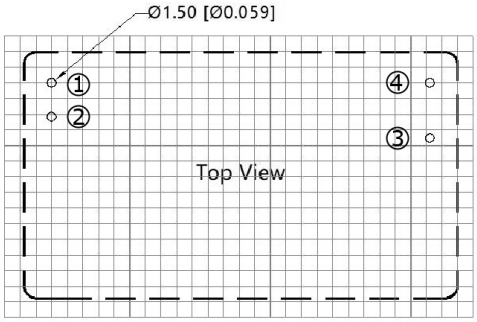

Note: Grid 2.54*2.54mm

Downloaded from Arrow.com.

MECHANICAL DRAWING (CONTINUED)

Chassis mount

units: mm [inch]
wire range: 24~12 AWG
tightening torque: Max 0.4 N·m
tolerance: ±1.0 [±0.039]

PIN CONNECTIONS	
PIN	Function
1	NC
2	AC(N)
3	AC(L)
4	+Vo
5	NC
6	NC
7	NC
8	-Vo

Note: NC = no connection

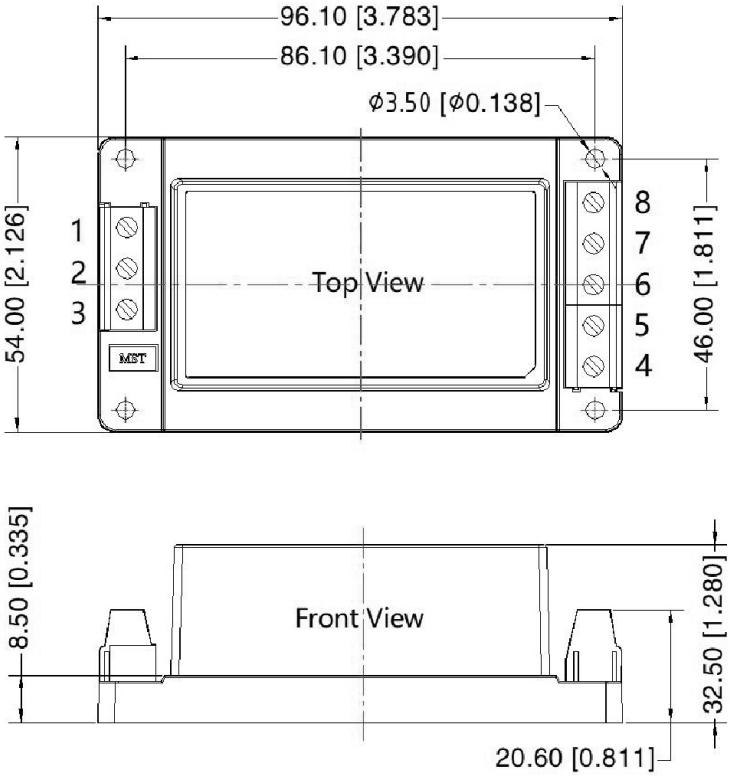

DIN-rail mount

units: mm [inch]
wire range: 24~12 AWG
tightening torque: Max 0.4 N·m
mounting rail: TS35, must be connected to safety ground
tolerance: ±1.0 [±0.039]

PIN CONNECTIONS	
PIN	Function
1	NC
2	AC(N)
3	AC(L)
4	+Vo
5	NC
6	NC
7	NC
8	-Vo

Note: NC = no connection

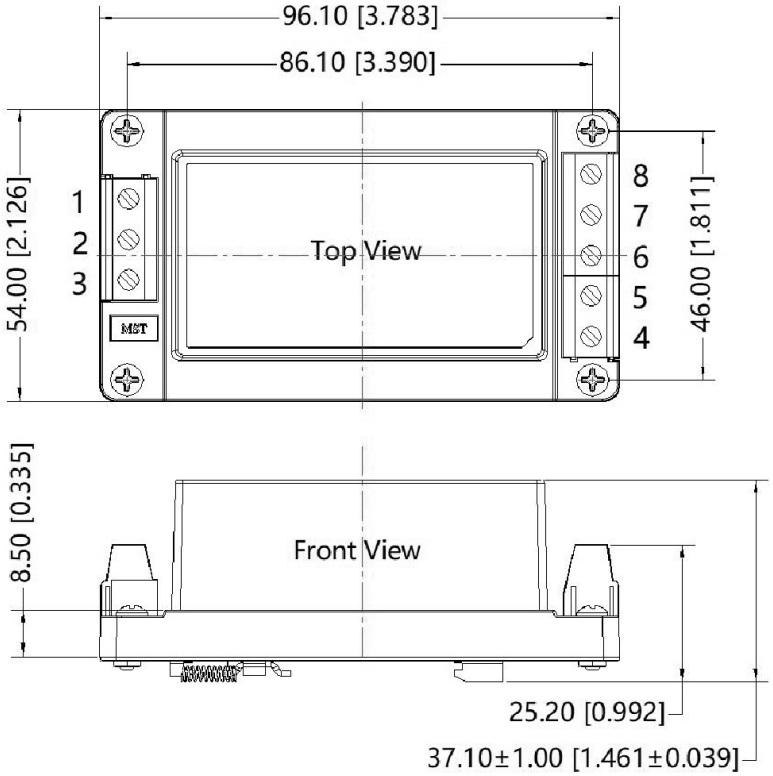

Downloaded from Arrow.com.

APPLICATION DESIGN REFERENCE

Output Filtering Components:
C1 should be a ceramic capacitor and the TVS will help protect downstream electronics in the unlikely event of converter failure.

Figure 1

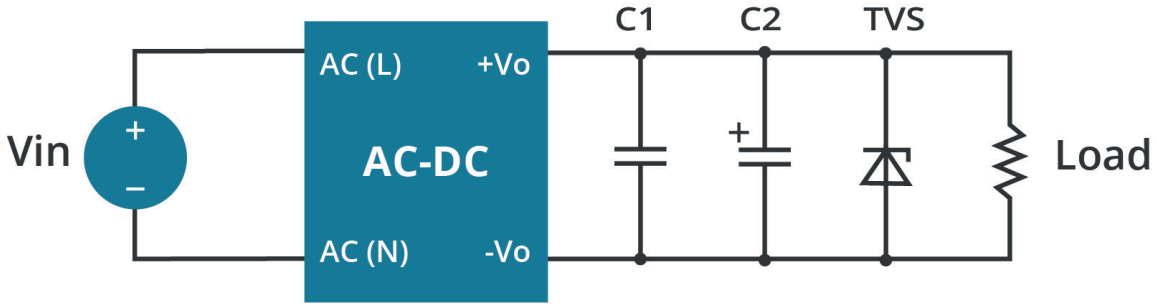

Table 1

Part No.	C1 (µF / V)	C2 (µF / V)	TVS
PSK-30D-3	1 / 100	10 / 50	SMBJ7.0A
PSK-30D-5		10 / 50	SMBJ7.0A
PSK-30D-9		10 / 50	SMBJ12A
PSK-30D-12		10 / 50	SMBJ20A
PSK-30D-15		10 / 50	SMBJ20A
PSK-30D-24		10 / 50	SMBJ30A
PSK-30D-48		10 / 63	SMBJ64A

Note: 2A / 300V slow-blow fuse integrated into unit.

EMC RECOMMENDED CIRCUIT

Figure 2

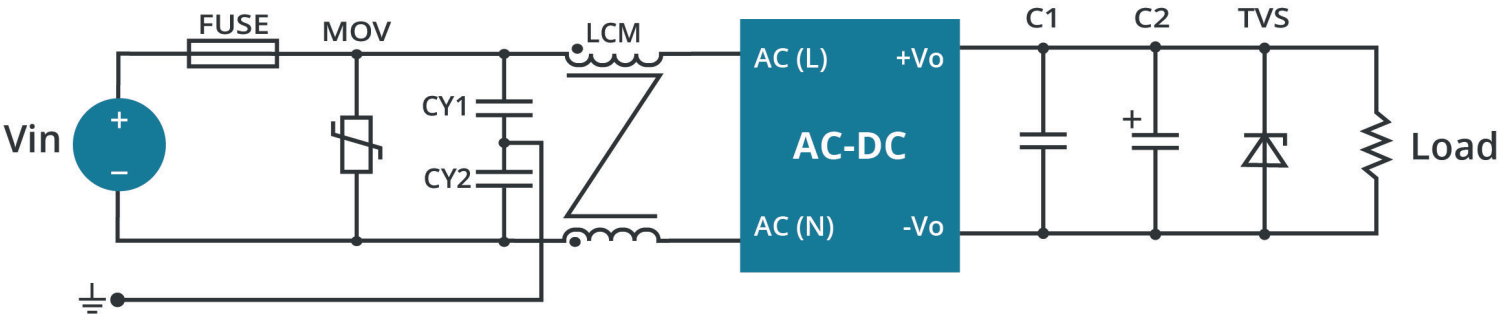

Table 2

Components	Recommended Value
FUSE	2 A/300 V, slow-blow, required
MOV	S14K350
CY1/CY2	1 nF/400 Vac
LCM	10 mH

Downloaded from Arrow.com.

DERATING CURVE

TEMPERATURE DERATING CURVE
3.3/9/12/15/24/48 Vdc output models

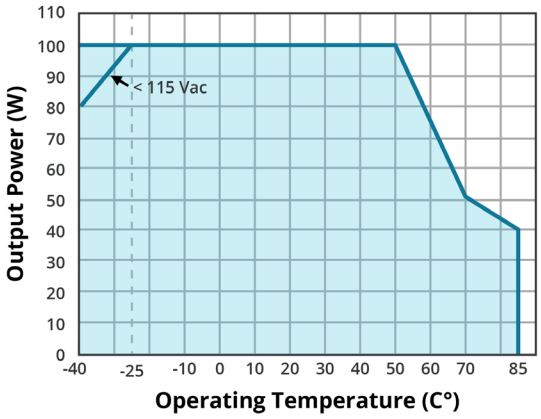

TEMPERATURE DERATING CURVE
5 Vdc output model

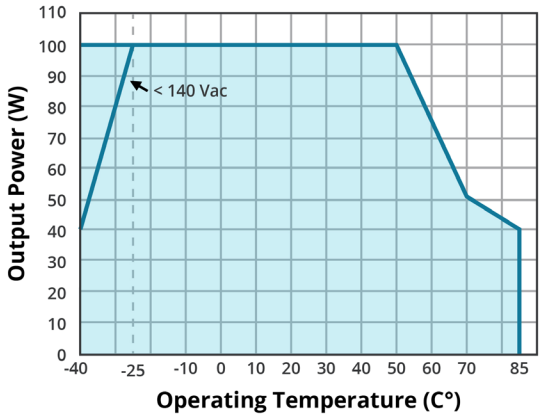

INPUT VOLTAGE DERATING CURVE
(25 °C)

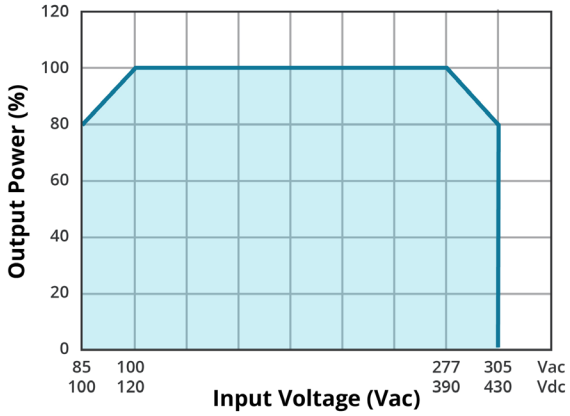

ALTITUDE DERATING CURVE

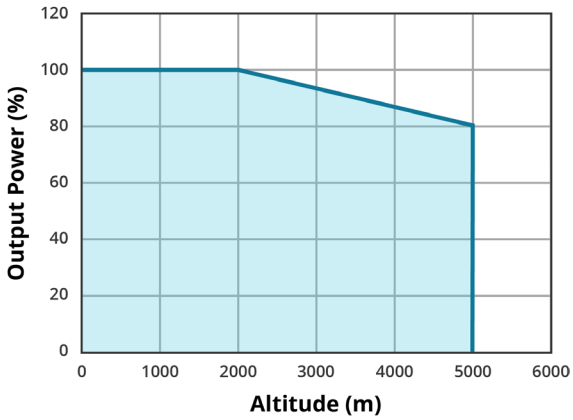

EFFICIENCY CURVES

EFFICIENCY VS INPUT VOLTAGE
(full load)

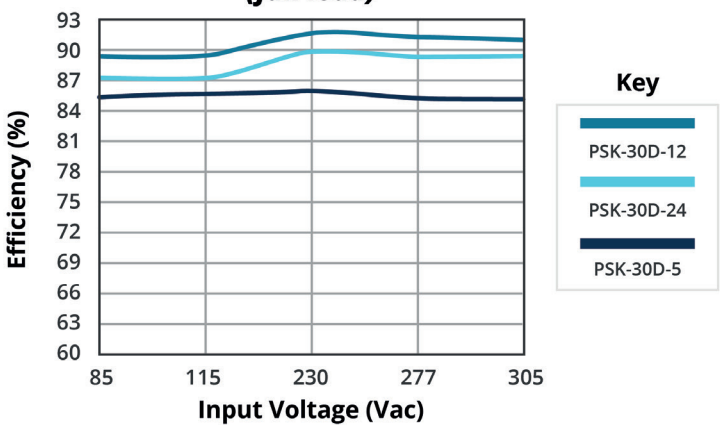

EFFICIENCY VS OUTPUT LOAD
(at 230 Vac)

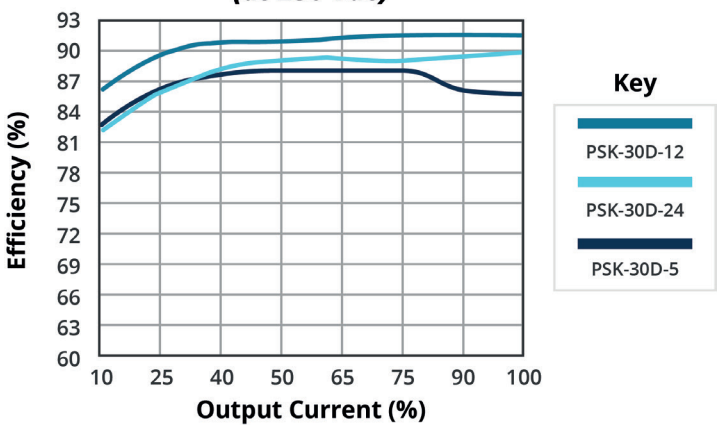

Downloaded from Arrow.com.

REVISION HISTORY

rev.	description	date
1.0	initial release	10/25/2021
1.01	no load power consumption updated	05/03/2022

The revision history provided is for informational purposes only and is believed to be accurate.

CUI INC
a bel group

Headquarters
20050 SW 112th Ave.
Tualatin, OR 97062
800.275.4899

Fax 503.612.2383
cui.com
techsupport@cui.com

CUI offers a two (2) year limited warranty. Complete warranty information is listed on our website.

CUI reserves the right to make changes to the product at any time without notice. Information provided by CUI is believed to be accurate and reliable. However, no responsibility is assumed by CUI for its use, nor for any infringements of patents or other rights of third parties which may result from its use.

CUI products are not authorized or warranted for use as critical components in equipment that requires an extremely high level of reliability. A critical component is any component of a life support device or system whose failure to perform can be reasonably expected to cause the failure of the life support device or system, or to affect its safety or effectiveness.

Downloaded from Arrow.com.