THIS DRAWING IS UNPUBLISHED. RELEASED FOR PUBLICATION -,-
© COPYRIGHT - BY TYCO ELECTRONICS CORPORATION ALL RIGHTS RESERVED.

LOC	DIST
DF	00

REVISIONS

P	LTR	DESCRIPTION	DATE	DWN	APVD
	1	CONVERTED RADAILL DWG TO TYCO ACAD DWG	08/04	--	--
	2	REVISED.	03APR10	RF	JM

1. SHELL: ALUMINUM ALLOY 6061 T651
   INSERT RETENTION CLIP & JACKSCREW SLEEVE: COPPER ALLOY PER ASTM B194
   JACKSCREW KEY, CENTER LOCK, & RETAINING NUT: STAINLESS STEEL PER AISI 316
   PROTECTIVE COVER: THERMOPLASTIC ELASTOMER
2. SHELL: ELECTROLESS NICKEL PER SAE AMS-C-26074, CLASS 1.
3. DATE CODE - YEAR & WEEK (YY WW)
4. INDEXING POINT FOR POLARIZATION.
5. SHELL CAVITY FOR GPRB SERIES INSERTS WITH KEYING CODE A.
6. SHELL CAVITY FOR GPRB SERIES INSERTS WITH KEYING CODE B.
7. PROTECTIVE COVERS NOT SHOWN FOR CLARITY.
8. SCREW HEAD DIAMETER: 6.00 [.236] MAX.
9. THE JACKSCREW AND RETAINING NUT ARE SHIPPED UNASSEMBLED.
   THE CUSTOMER SHALL APPLY LOCTITE® PRODUCT 272 THREADLOCKING ADHESIVE WHEN INSTALLING THESE ON THE SHELL ASSEMBLY. LOCTITE® IS A REGISTERED TRADEMARK OF LOCTITE CORPORATION.
10. A SPANNER WRENCH TOOL, TYCO ELECTRONICS P/N 1738220-1 (WITH 1/4-in ADAPTER)OR 1738221-1 (WITH T-HANDLE), IS USED TO LOCK THE RETAINING NUT.
    RECOMMENDED LOCKING TORQUE: 1.5 N-m [13 in-lb].
11. PITCH FOR SIDE-BY-SIDE MOUNTING: 19.50 [.768] MIN.
12. DESCRIPTIVE PART NUMBER: GPRB2PD13N
    SERIES: GPRB
    SHELL SIZE: 2 (TWO-CAVITY SHELL)
    SHELL STYLE: P (PLUG)
    MODIFICATION CODE: D (2x ø3.10mm THRU HOLES - FOR PANEL MOUNTING)
    LOCKING AND POLARIZING DEVICE: 1 (JACKSCREW)
    POLARIZATION CODE: 3 (N-Z JACKSCREW HARDWARE SHIPPED UNASSEMBLED)
    SHELL PLATING: N (NICKEL PLATING)
13. THIS PRODUCT IS SOLD BY TYCO ELECTRONICS UNDER A LICENSE FROM RADIALL SA.

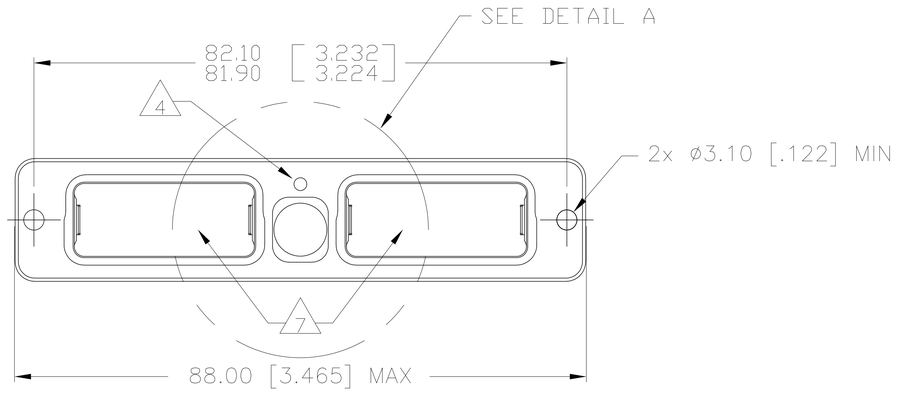

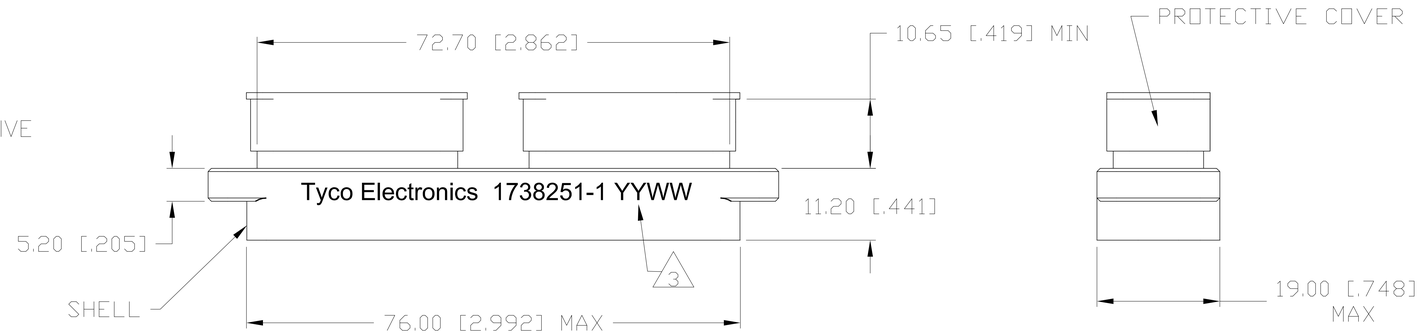

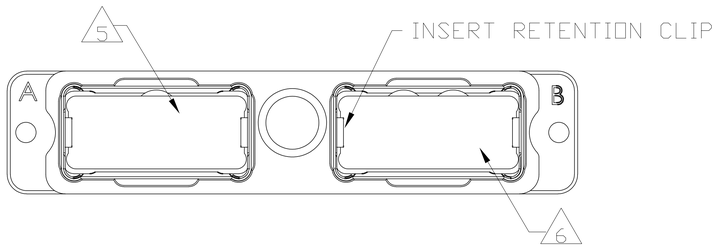

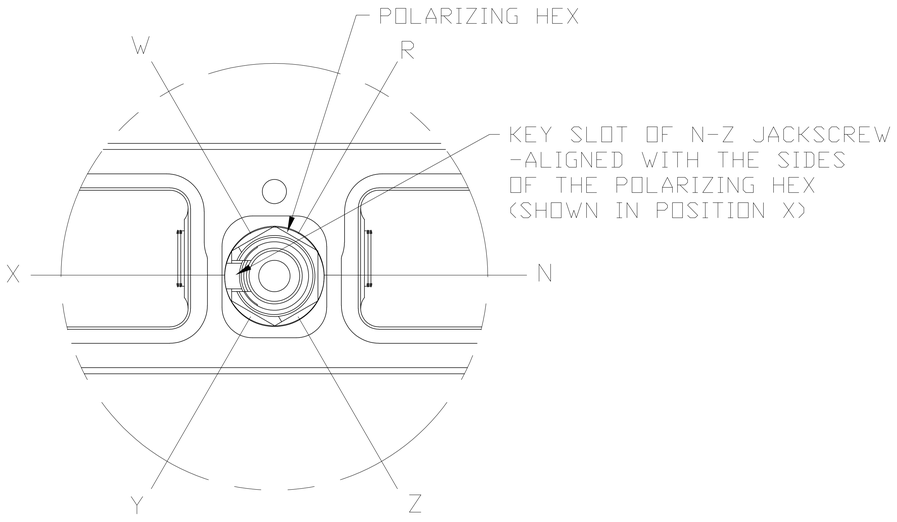

DETAIL A - JACKSCREW KIT ASSEMBLED

THIS PRINT IS
PRELIMINARY
UNQUALIFIED PRODUCT
CONTACT PRODUCT ENGINEERING
BEFORE USING THIS PRINT

1738251-1
PART NUMBER

THIS DRAWING IS A CONTROLLED DOCUMENT.

DIMENSIONS: mm [INCHES]

TOLERANCES UNLESS OTHERWISE SPECIFIED:
0 PLC ± --
1 PLC ± --
2 PLC ± 0.20 [.008]
3 PLC ± --
4 PLC ± --
ANGLES ± --

MATERIAL: 1
FINISH: 2

DWN	AUG04
CHK	AUG04
APVD	AUG04
PRODUCT SPEC	--
APPLICATION SPEC	--
WEIGHT	--

Tyco Electronics Corporation
HARRISBURG, PA 17105-3608

PRELIMINARY

PLUG ASSEMBLY,
WITH TWO 3.10mm DIA MOUNTING HOLES,
WITH N-Z JACKSCREW, GPRB2

SIZE	CAGE CODE	DRAWING NO	RESTRICTED TO
A0	00779	C-1738251	--

CUSTOMER DRAWING | SCALE 1:1 | SHEET 1 OF 2 | REV 2

Downloaded from Arrow.com.

THIS DRAWING IS UNPUBLISHED. RELEASED FOR PUBLICATION --/--
© COPYRIGHT -- BY TYCO ELECTRONICS CORPORATION ALL RIGHTS RESERVED.

LOC	DIST
DF	00

REVISIONS

P	LTR	DESCRIPTION	DATE	DWN	APVD
	--	SEE SHEET 1	--	---	---

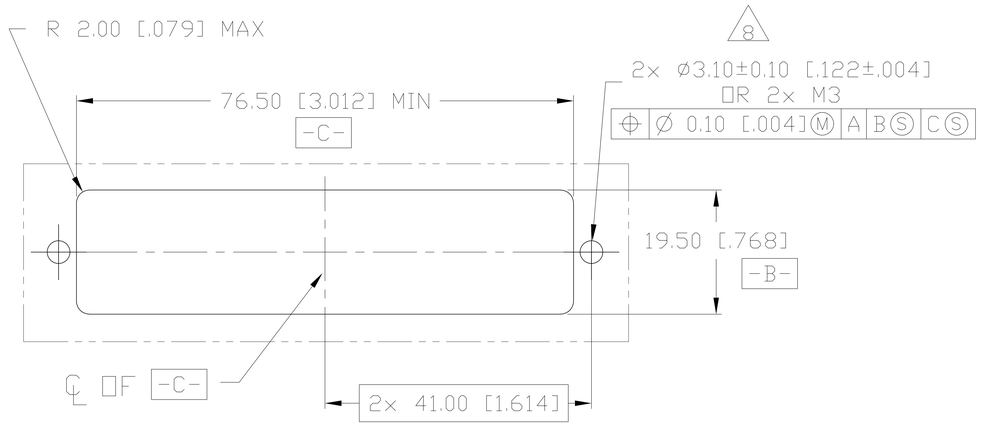

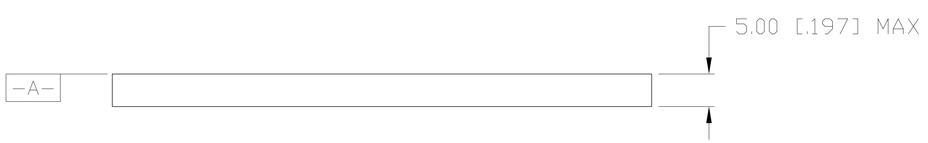

RECOMMENDED PANEL CUTOUT

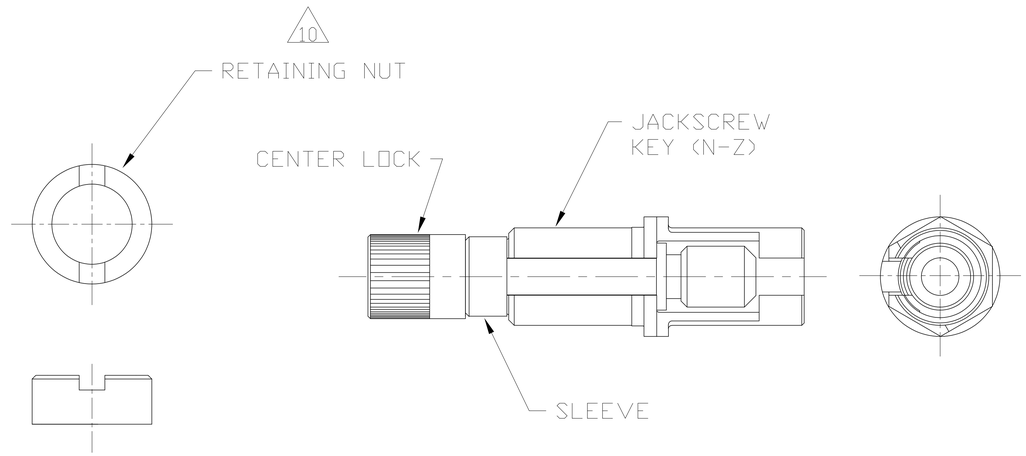

JACKSCREW KIT 9

THIS PRINT IS

PRELIMINARY

UNQUALIFIED PRODUCT
CONTACT PRODUCT ENGINEERING
BEFORE USING THIS PRINT

1738251-1

PART NUMBER

THIS DRAWING IS A CONTROLLED DOCUMENT.

DIMENSIONS: mm [INCHES]

TOLERANCES UNLESS OTHERWISE SPECIFIED:
0 PLC ± --
1 PLC ± --
2 PLC ± 0.20 [.008]
3 PLC ± --
4 PLC ± --
ANGLES ± --

MATERIAL: 1 FINISH: 2

DWN	R FLAIG	AUG04
CHK	J MOSIER	AUG04
APVD	J MOSIER	AUG04
PRODUCT SPEC	---	
APPLICATION SPEC	---	
WEIGHT	---	

CUSTOMER DRAWING

Tyco Electronics Corporation
Harrisburg, Pa 17105-3608

NAME: PLUG SHELL KIT, WITH TWO 3.10mm DIA MOUNTING HOLES, WITH N-Z JACKSCREW, GPRB2

SIZE	CAGE CODE	DRAWING NO	RESTRICTED TO
A0	00779	C-1738251	---

SCALE 1:1 SHEET 2 OF 2 REV 2

Downloaded from Arrow.com.