SPECIFICATION

BMS28-12-08H5.0-02

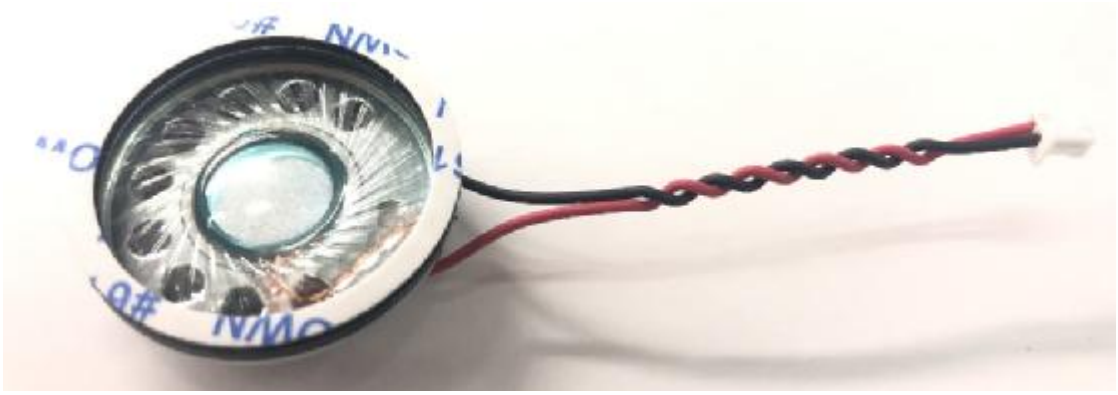



文件号：BS/QDTE045B

Downloaded from Arrow.com.

BESTAR	SPECIFICATION FOR AUTOMOTIVE SPEAKER			
	TOTAL PAGE	09	www.be-star.com	RoHS

Customer		Model Name	BMS28-12-08H5.0-02
Customer P/N		Product No.	130273
Date	06 Dec. 2019	Issue No.	BS/TES01.1809A1
Page	01 of 09	Issue Date	2019/12/06

Approval：

1.Characteristics
2.Drawing
3.Reliability Test
4.Packing
5.History Change Record

Drawn by	Checked by	Approved by	Customer approved
陈亚娟	毛钰麒	徐波	

BESTAR Holdings Co., Ltd.
No.199, West Huanghe Road, Changzhou, Jiangsu, P.R. China
Tel: +86 5196 789 6200
Fax: +86 5196 789 6220
E-Mail: Info@be-star.com
Web: www.be-star.com

Downloaded from Arrow.com.

BMS28-12-08H5.0-02

1. Characteristic

1.1 Electrical and Mechanical Characteristics

No.	Item	Specification
1.	Impedance(at 1kHz)	8±15% Ω
2.	Rated Input Power	0.8W
3.	Maximum Input Power	1.2W
4.	Resonance Frequency	600±20%Hz
5.	Frequency Response	F0 ～20KHz
6.	Output SPL	92±3dB at 600Hz(at 0.1W/0.1m)
7.	Distortion	≤10%（at 1kHz,0.1W）
8.	Buzzes & Rattles	Must be normal at sine wave 2.58V
9.	Magnet	NdFeB
10.	Operating Temperature	-40...+85°C
11.	Storage Temperature	-40...+85°C

1.2 Test Method

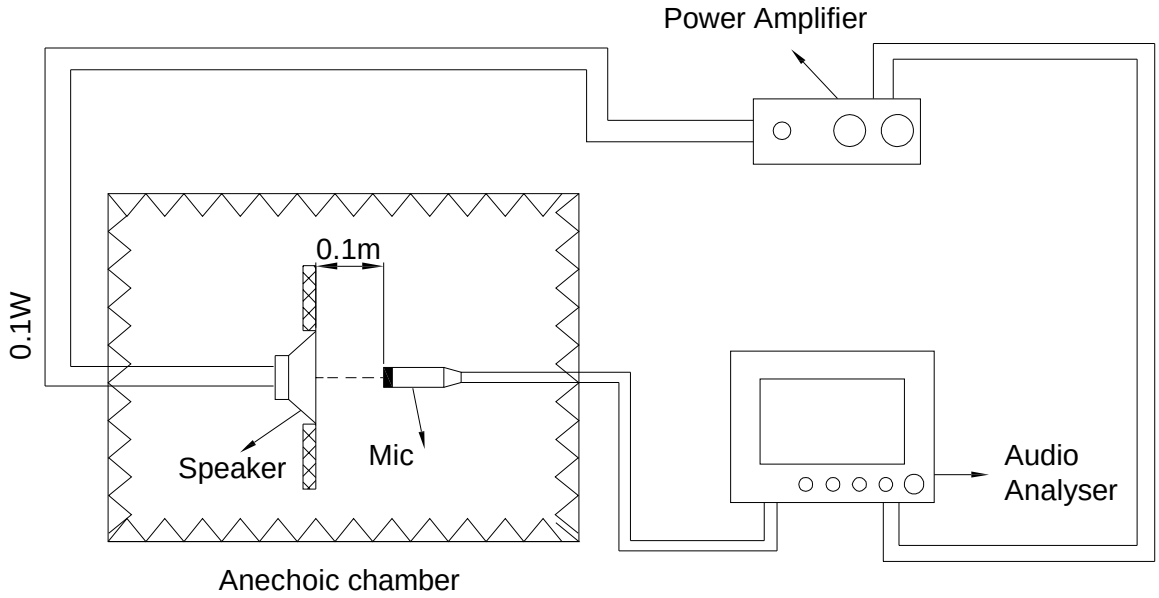

This print and information there in are proprietary to BESTAR Holdings Co., Ltd. and shall not be used in whole or in part without its written content

				Date:	2019/12/06
				Drawn by:	陈亚娟
A1	2019/12/06	陈亚娟		Checked by:	毛钰麒
Rev.	Date	Drawn	Note	Approved by:	徐波

BESTAR Holdings Co., Ltd http://www.be-star.com info@be-star.com

BMS28-12-08H5.0-02

Speaker

DRG NO: BS/TES01.1809A1 Page:2 of 9

文件号：BS/QDTE045B

Downloaded from Arrow.com.

1.3 Fundamental (0.1W/0.1m SOUNDCHECK testing)

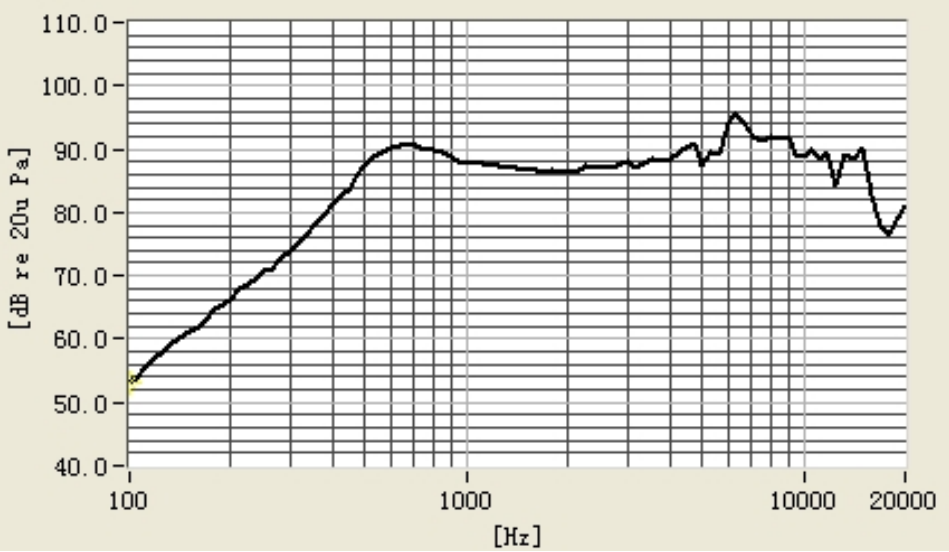

1.4 THD (0.1W/0.1m SOUNDCHECK testing)

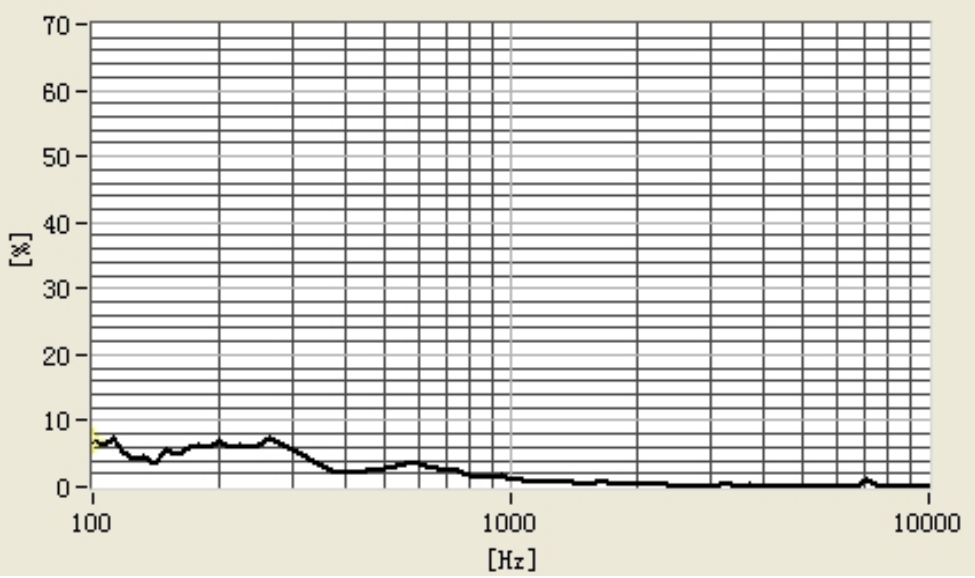

This print and information there in are proprietary to BESTAR Holdings Co., Ltd. and shall not be used in whole or in part without its written content

				Date:	2019/12/06	BMS28-12-08H5.0-02
				Drawn by:	陈亚娟	
A1	2019/12/06	陈亚娟		Checked by:	毛钰麒	Speaker
Rev.	Date	Drawn	Note	Approved by:	徐波	
BESTAR Holdings Co., Ltd http://www.be-star.com info@be-star.com					DRG NO: BS/TES01.1809A1	Page:3 of 9

文件号：BS/QDTE045B

Downloaded from Arrow.com.

BMS28-12-08H5.0-02

1.5 Impedance (0.1W/0.1m SOUNDCHECK testing)

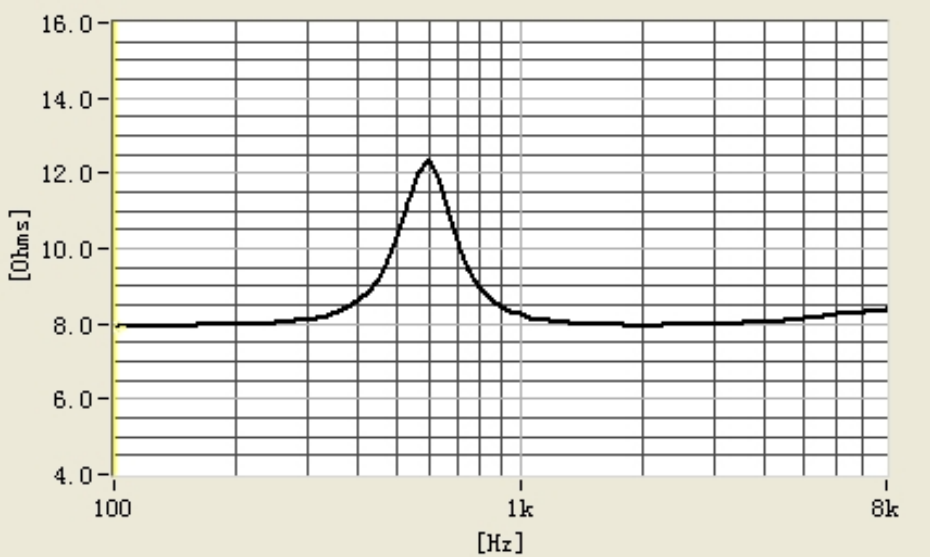

1.6 Rub&buzz (0.1W/0.1m SOUNDCHECK testing)

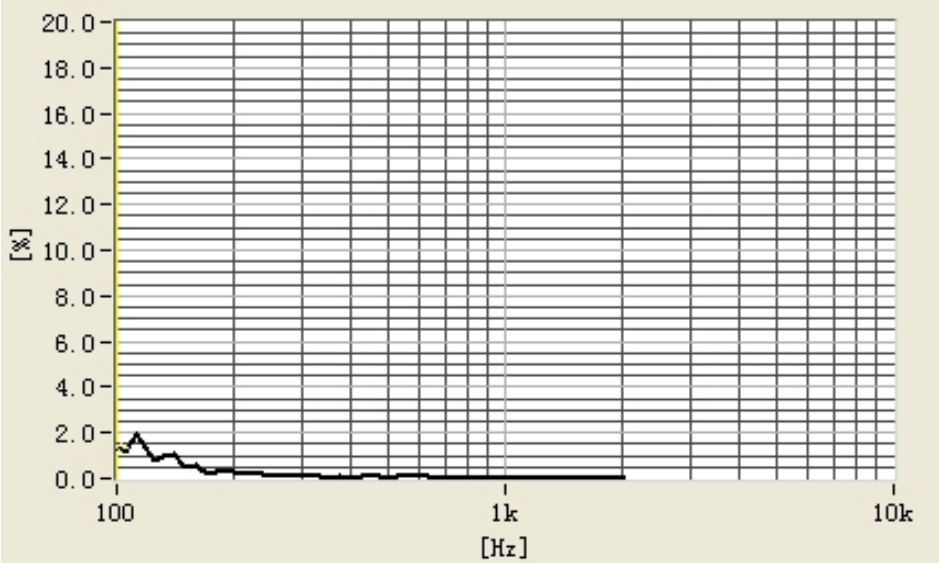

This print and information there in are proprietary to BESTAR Holdings Co., Ltd. and shall not be used in whole or in part without its written content

				Date:	2019/12/06
				Drawn by:	陈亚娟
A1	2019/12/06	陈亚娟		Checked by:	毛钰麒
Rev.	Date	Drawn	Note	Approved by:	徐波

BESTAR Holdings Co., Ltd http://www.be-star.com info@be-star.com

BMS28-12-08H5.0-02

Speaker

DRG NO: BS/TES01.1809A1 Page:4 of 9

文件号：BS/QDTE045B

Downloaded from Arrow.com.

BMS28-12-08H5.0-02

2. Drawing

2.1 Dimensions

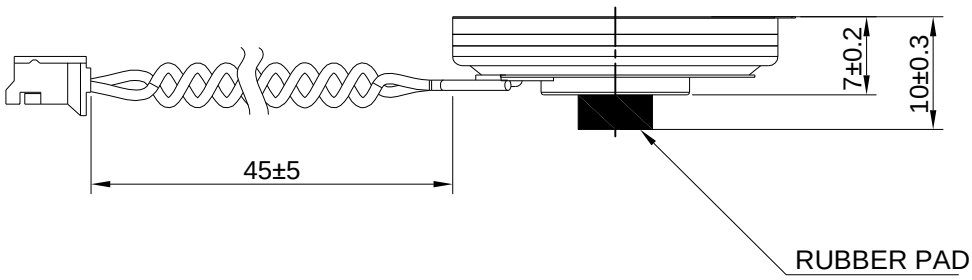

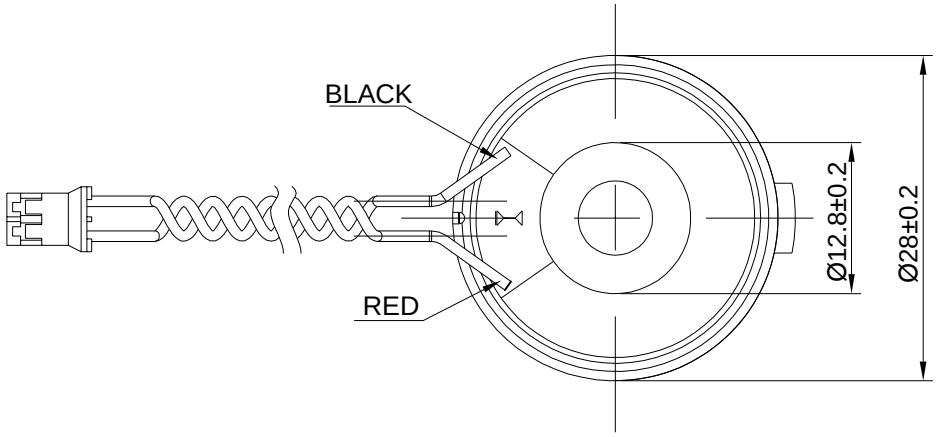

2x Wire UL3302 AWG28# ,Colour:Black(b) and red(r)

Connect Pin:1.25

Housing:A1251-02Y

This print and information there in are proprietary to BESTAR Holdings Co., Ltd. and shall not be used in whole or in part without its written content

				Date:	2019/12/06	BMS28-12-08H5.0-02
				Drawn by:	陈亚娟	
A1	2019/12/06	陈亚娟		Checked by:	毛钰麒	Speaker
Rev.	Date	Drawn	Note	Approved by:	徐波	
BESTAR Holdings Co., Ltd http://www.be-star.com info@be-star.com					DRG NO: BS/TES01.1809A1	Page:5 of 9

文件号：BS/QDTE045B

Downloaded from Arrow.com.

BMS28-12-08H5.0-02

2.2 Bill of Material

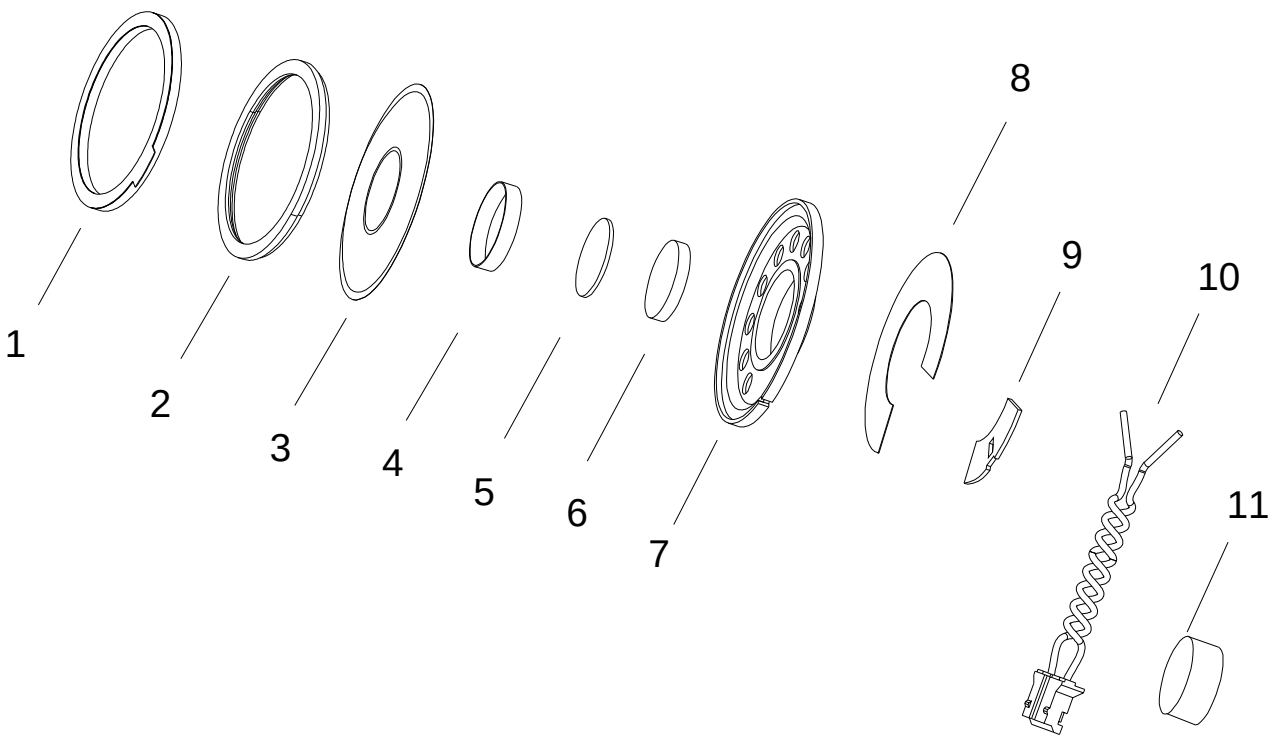

No	Parts Name	Material
11	Rubber Pead	EPDM
10	Wire	Cu
9	PCB	Epoxy and Cu(plating Sn)
8	Mesh	Cloth
7	Frame	SPCC
6	Magnet	N38H
5	Plate	SPCC
4	Voice coil	Cu
3	Diaphragm	PEI
2	Gasket	PBT+30％GF
1	Rubber Pead	EPDM

This print and information there in are proprietary to BESTAR Holdings Co., Ltd. and shall not be used in whole or in part without its written content

				Date:	2019/12/06
				Drawn by:	陈亚娟
A1	2019/12/06	陈亚娟		Checked by:	毛钰麒
Rev.	Date	Drawn	Note	Approved by:	徐波

BESTAR Holdings Co., Ltd http://www.be-star.com info@be-star.com

BMS28-12-08H5.0-02

Speaker

DRG NO: BS/TES01.1809A1 Page:6 of 9

文件号：BS/QDTE045B

Downloaded from Arrow.com.

BMS28-12-08H5.0-02

3. Reliability Test

3.1 Load Test

Power	0.8W White noise
Duration	240hrs

3.2 High Temperature Test

Temperature	+85±3 ℃
Duration	240hrs

3.3 Low Temperature Test

Temperature	-40±3 ℃
Duration	240hrs

3.4 Damp Heat

Temperature	40±3 ℃
Relative Humidity	90%-95%RH
Duration	96hrs

3.5 Temperature Cycle Test

Cycle	5

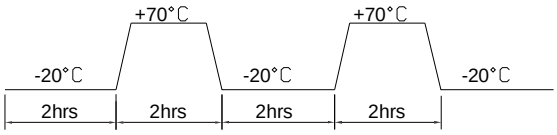

3.6 Drop Test

Height	100cm
Direction	x,y&z 3 axis
Time	6s

Notice

1. Immediately after reliability test, the samples shall be stored under typical ambient laboratory climate conditions unless otherwise noted for 4 hours prior to performing verification testing.
2. After reliability test, all samples must meet all specified requirements
3. Sensitivity differences at F0 ~ 3.5Khz must be within +/-3 of initial values.

This print and information there in are proprietary to BESTAR Holdings Co., Ltd. and shall not be used in whole or in part without its written content

				Date:	2019/12/06	BMS28-12-08H5.0-02
				Drawn by:	陈亚娟	
A1	2019/12/06	陈亚娟		Checked by:	毛钰麒	Speaker
Rev.	Date	Drawn	Note	Approved by:	徐波	
BESTAR Holdings Co., Ltd http://www.be-star.com info@be-star.com					DRG NO: BS/TES01.1809A1	Page:7 of 9

文件号：BS/QDTE045B

Downloaded from Arrow.com.

BMS28-12-08H5.0-02

4. Packing

4. 1 Packing Drawing

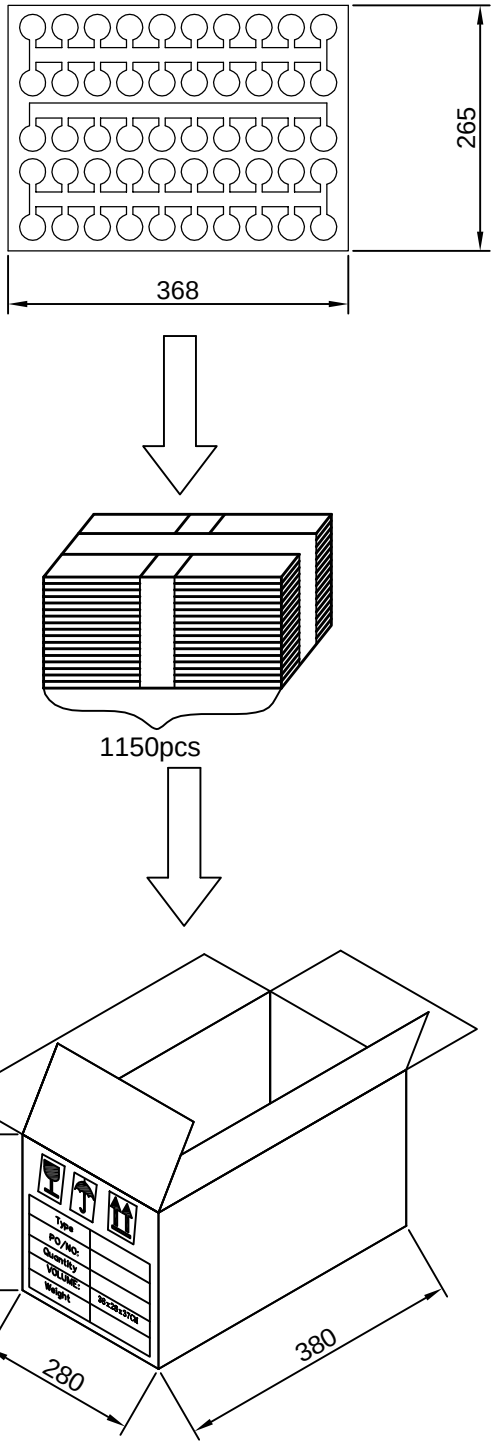

4. 2 packing quantity

1)Carton size:380x280x370
2)23 pcs trays per carton
3)50x23=1150 pcs per carton

This print and information there in are proprietary to BESTAR Holdings Co., Ltd. and shall not be used in whole or in part without its written content

				Date:	2019/12/06	BMS28-12-08H5.0-02
				Drawn by:	陈亚娟	
A1	2019/12/06	陈亚娟		Checked by:	毛钰麒	Speaker
Rev.	Date	Drawn	Note	Approved by:	徐波	
BESTAR Holdings Co., Ltd http://www.be-star.com info@be-star.com					DRG NO: BS/TES01.1809A1	Page:8 of 9

文件号：BS/QDTE045B

Downloaded from Arrow.com.

BMS28-12-08H5.0-02

5. History change record

version No.	Change Items		Date	Drawn	Approved
	Before	After			
A0			19/06/21	高一凡	徐　波
A1	The size of rubber pad is 5mm	The size of rubber pad is 3mm and the total height of the product is 10±0.3	19/12/06	陈亚娟	徐　波

This print and information there in are proprietary to BESTAR Holdings Co., Ltd. and shall not be used in whole or in part without its written content

				Date:	2019/12/06
				Drawn by:	陈亚娟
A1	2019/12/06	陈亚娟		Checked by:	毛钰麒
Rev.	Date	Drawn	Note	Approved by:	徐波

BESTAR Holdings Co., Ltd http://www.be-star.com info@be-star.com

BMS28-12-08H5.0-02

Speaker

DRG NO: BS/TES01.1809A1 | Page:9 of 9

文件号：BS/QDTE045B

Downloaded from Arrow.com.