MATERIAL NUMBER	OLD PART NUMBER
1201140211	BTY401N-FBC

WIRING DIAGRAM

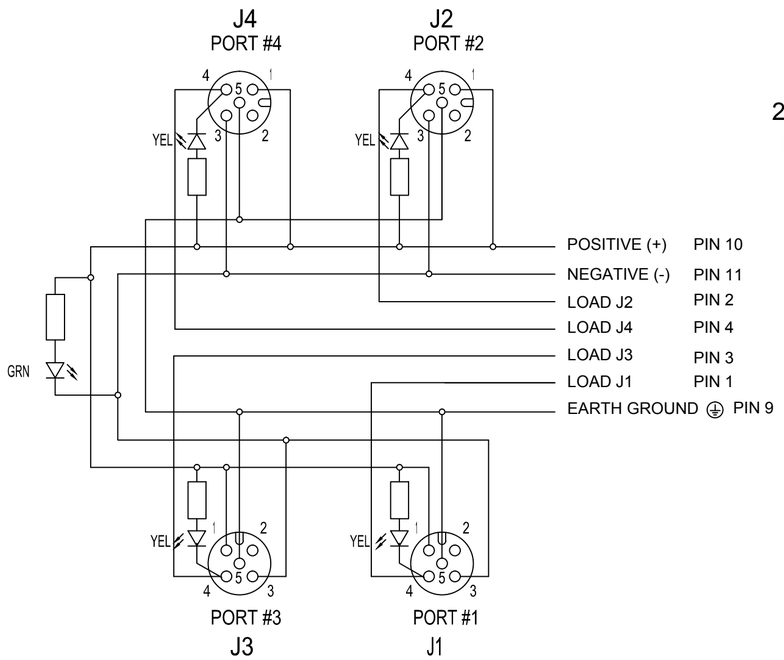

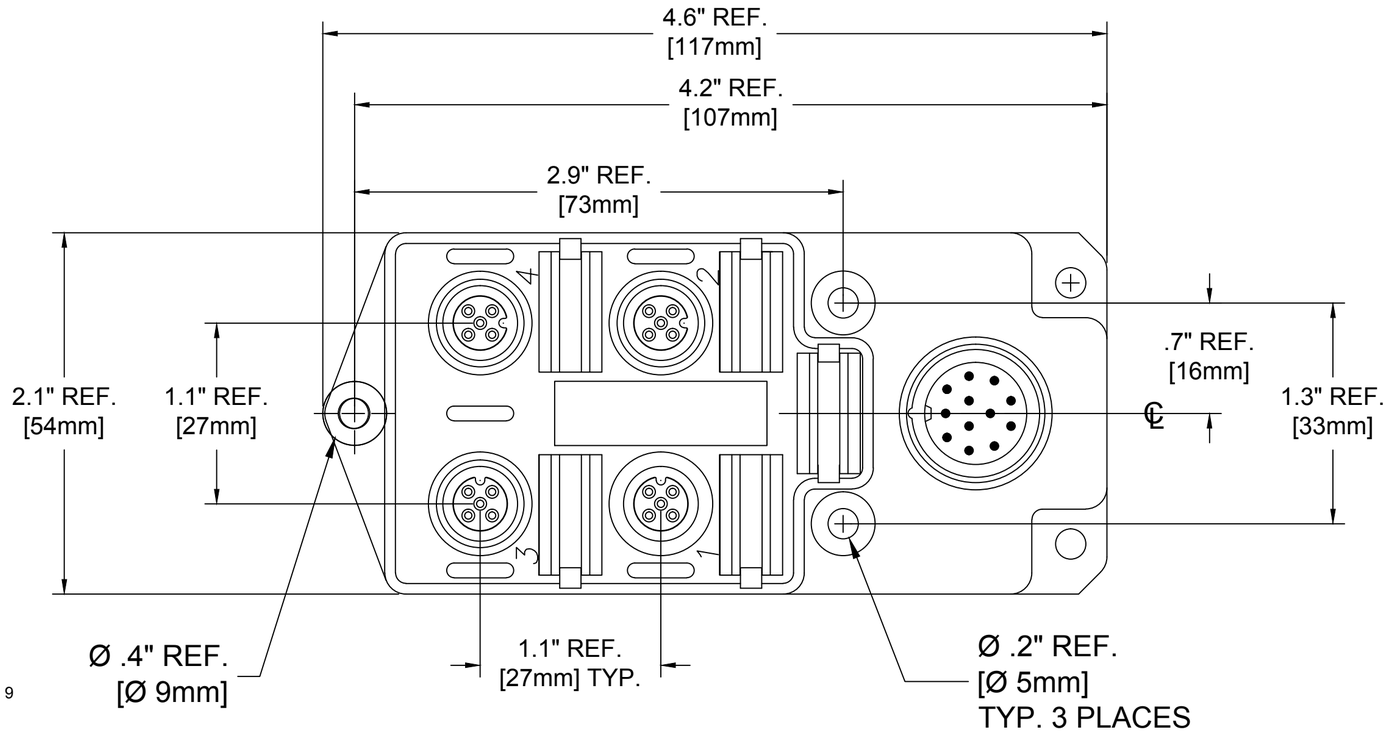

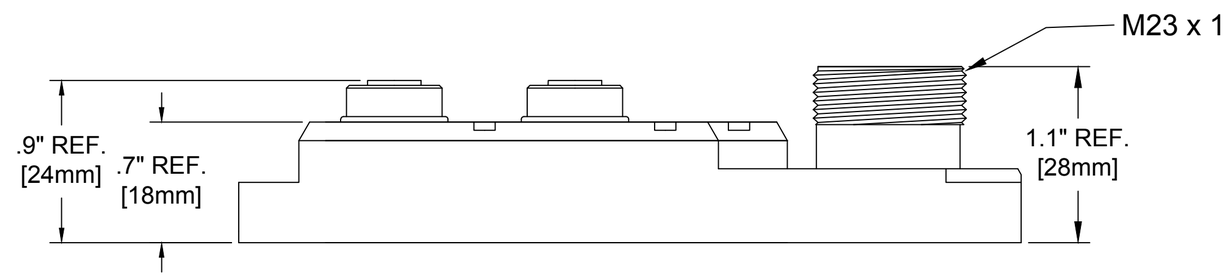

VOLTAGE RATING	10-30 VDC
AMPERAGE RATING PER PORT	4 AMPS
PROTECTION	IP67
OPERATING TEMPERATURE	-5°C TO 80°C
UL CERTIFICATIONS	UL RECOGNIZED FILE NO. E152210
CSA CERTIFICATIONS	CSA CERTIFIED, FILE NO. LR6837

COMPONENT	MATERIAL	FINISH
M12 INSERT	NYLON	BLACK
CONTACT SOCKET	COPPER ALLOY	GOLD OVER NICKEL
O-RING	VITON	RED
RECEPTACLE SHELL	BRASS	NICKEL PLATED
HOUSING	PBT	YELLOW
LABEL	ABS	WHITE
LENS	NYLON	CLEAR
M23 INSERT	PVC	GRAY
CONTACT PIN	COPPER ALLOY	GOLD OVER NICKEL
RECEPTACLE SHELL	BRASS	NICKEL PLATED

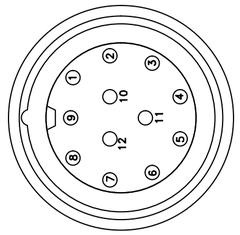

MALE FACE VIEW

NOTE-PINS 5,6,7,8 & 12 NOT USED

RELEASE
EC NO: IPG2014-0508
DRWN: GGUSTAFS 2013/10/30
CH'KD: VOU ----
APPR: BWOODMAN2013/11/01
DESCRIPTION
A
REV

QUALITY SYMBOL
▼=0
(C)=0

GENERAL TOLERANCES (UNLESS SPECIFIED)

	mm	INCH
4 PLACES	±---	±---
3 PLACES	±---	±.005
2 PLACES	±0.13	±.010
1 PLACE	±0.25	±.020
ANGULAR ±.5°		

DRAFT WHERE APPLICABLE MUST REMAIN WITHIN DIMENSIONS

DIMENSION STYLE: IN/MM
SCALE: NTS
DESIGN UNITS: INCH
THIRD ANGLE PROJECTION

DRAWN BY: GGUSTAFS DATE: 2013/09/06
CHECKED BY: VOU DATE: 2013/10/10
APPROVED BY: BWOODMAN DATE: 2013/11/01

TITLE: 4 PORT MIC MPIS TOP MOUNT NPN 12P M M23 HR CONNECTOR

molex MOLEX INCORPORATED

MATERIAL NO.: SEE CHART
DOCUMENT NO.: SD-120114-095
SHEET NO.: 1 0F 1
SIZE: C

THIS DRAWING CONTAINS INFORMATION THAT IS PROPRIETARY TO MOLEX INCORPORATED AND SHOULD NOT BE USED WITHOUT WRITTEN PERMISSION

Downloaded from Arrow.com.