| REVISIONS | | | | | |
|---|---|---|---|---|---|
| REV | ECO | DESCRIPTION | DATE | BY | APPR |
| A1 | - | FIRST RELEASE | APR.13,2016 | Drack | Tommy |
| A2 | - | UPDATE DRAWING | Oct.30,2017 | White | Tommy |

E type, Normal Key

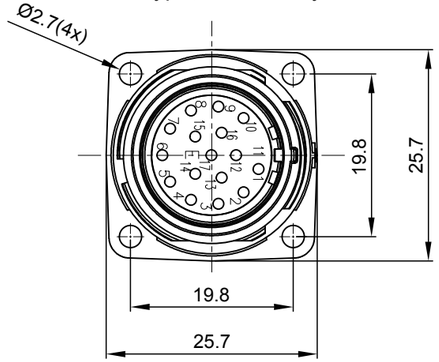


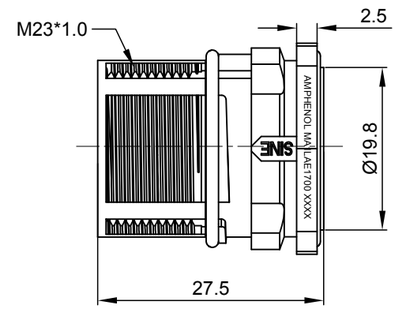


ASSEMBLED VIEW

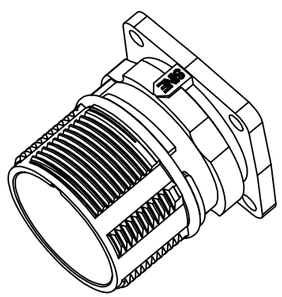

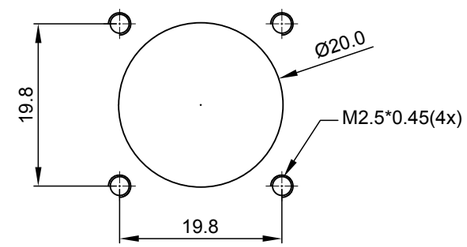


Mounting Holes

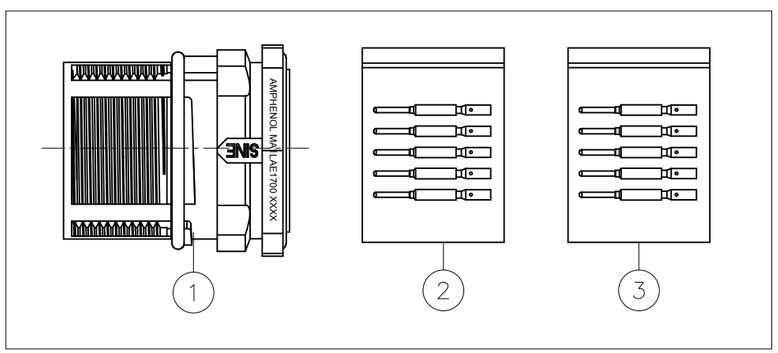


NOTES: UNLESS OTHERWISE SPECIFIED

1. MATERIAL:
   INSULATION INSERT: PA66,UL94 V0
   SEAL: VITON
   HOUSING BODY: ZINC DIE CAST, NICKEL PLATED
   CONTACT: COPPER ALLOY, GOLD PLATED

2. SPECIFICATIONS:
   2.1 CURRENT RATING: 9 AMPS
   2.2 VOLTAGE RATING: 125 V AC/DC
   2.3 CONTACT RESISTANCE: <5 mOHMS
   2.4 OPERATING TEMPERATURE: -20°C TO +130°C
   2.5 DIELECTRIC WITHSTANDING VOLTAGE: LESS THAN 2 MILLIAMPS CURRENT LEAKAGE @ 2500 VOLTS AC.
   2.6 DEGREE OF PROTECTION: IP67 ( MATED CONDITION )
   2.7 DEGREE OF POLLUTION: 3 PER UL840
   2.8 OVERVOLTAGE CATEGORY: III PER UL840
   2.9 MATING CYCLE DURABILITY: >500 CYCLES
   2.10 RoHS COMPLIANT

3. ALL DIMENSIONS ARE FOR REFERENCE USE ONLY.

| QUANTITY | PART NUMBER | DESCRIPTION | ITEM |
|---|---|---|---|
| 17 | SC000146 | CONTACT, PIN, Ø1.0mm ,Crimp 28~24AWG | 3 |
| 17 | SC000035 | CONTACT, PIN, Ø1.0mm, Crimp 22~18AWG | 2 |
| 1 | MA1LAE1700 | CONNECTOR | 1 |

MATERIALS LIST

UNLESS OTHERWISE SPECIFIED
1) All dimensions are in metric(mm).
2) Tolerances are as follows:
1 PL DEC ±0.30
2 PL DEC ±0.15
3 PL DEC ±0.08
Fractions ±1/64
Angles ±1°
3) Note reference = x

MATERIAL SPECIFICATIONS:

PROCESS SPECIFICATIONS:

NEXT ASS'Y:

| SIGNATURES | | DATE |
|---|---|---|
| DRAWN: | White | Oct.30,2017 |
| CHECKED: | Tod | Oct.30,2017 |
| ENGINEER: | | |
| APPROVAL: | Tommy | Oct.30,2017 |
| CUSTOMER: | | |

THIS DRAWING IS SUPPLIED FOR INFORMATION ONLY. DESIGN FEATURES, SPECIFICATIONS AND PERFORMANCE DATA SHOWN HEREON ARE THE PROPERTY OF THE AMPHENOL CORPORATION. NO RIGHTS OF REPRODUCTION ARE IMPLIED. ALL DIMENSIONS ARE SUBJECT TO NORMAL MANUFACTURING VARIATIONS.

Amphenol

Sine Systems - www.amphenol-sine.com
44724 Morley Drive
Clinton Township, MI 48036

KIT,M23A,RECEPTACLE,17POS,E TYPE
FLANGE MOUNT,PIN CONTACT

| SIZE | TYPE | DWG NO: | REVISION |
|---|---|---|---|
| B | C- | MA1LAE1700-KIT | A2 |

SCALE: NONE SHEET 1 OF 1

TITLE: KIT,M23A,RECEPTACLE,17POS,E TYPE,FLANGE MOUNT,PIN CONTACT
DWG NO: MA1LAE1700-KIT
REV: A2
SH: 1
OF: 1

Downloaded from Arrow.com.