REV.	ECN NO.	DATE	SIGN	DESCRIPTION
A		2025/01/14	Yunchen	Rev.01 to Rev.A
B	C250160	2025/02/13	Yunchen	B *7
C	C251100	2025/08/27	Yunchen	C *1

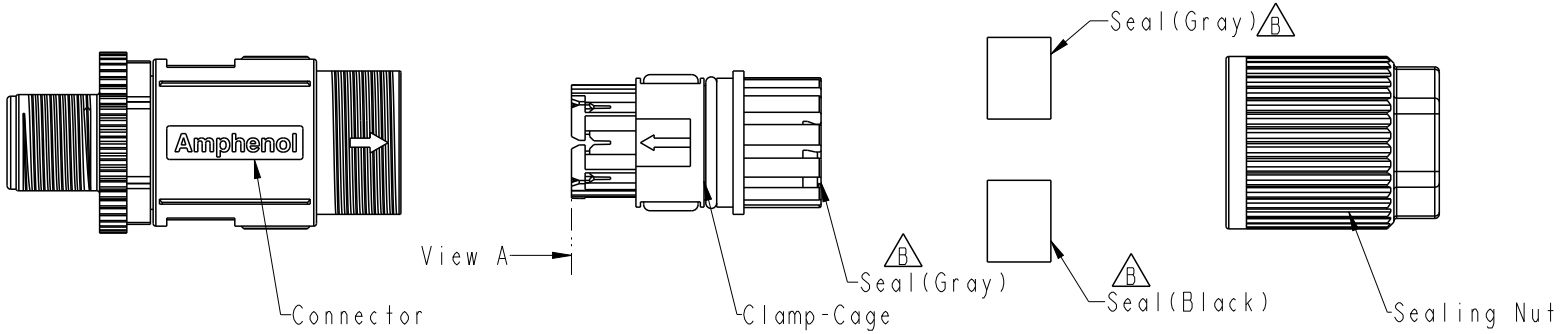

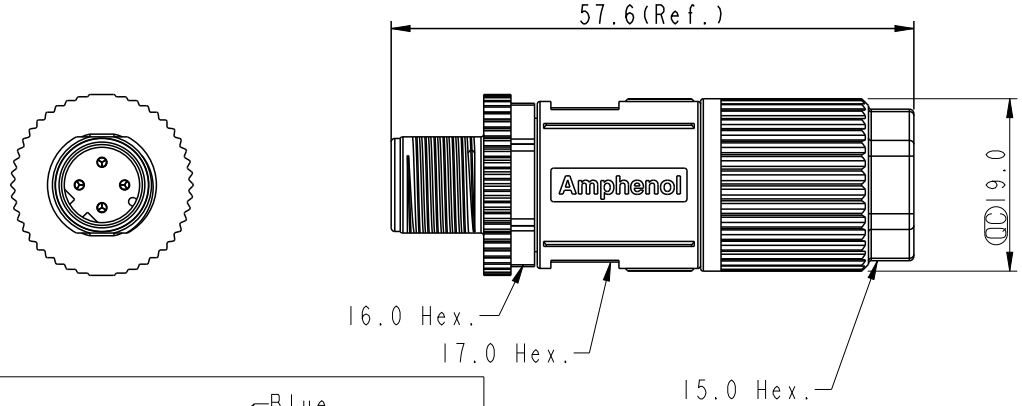

MSDS- XX BMMD-SL8002

XX:No.of Pin

Note:
* RoHS Compliant
* QC Important Dimension
* Waterproof rate: IP68, mated 1m/24h
* Connector
  Housing: Thermoplastic, Black
  B Pin: Copper alloy, Gold/Tin plated
  Extension Nut: Metal
  C O-Ring: Rubber, Black
  B * Clamp Cage: Thermoplastic, Original
* Sealing Nut: Metal
  B * Seal For Cable:
  Seal(Gray)+Seal(Gray):∅5.8mm~∅7.1mm
  Seal(Gray)+Seal(Black):∅4.7mm~∅5.7mm
  B * Applicable wire gauge: 20AWG~26AWG
* One set unassembled in one pe bag

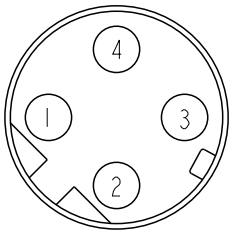

4P

Pin Assignments
Front View

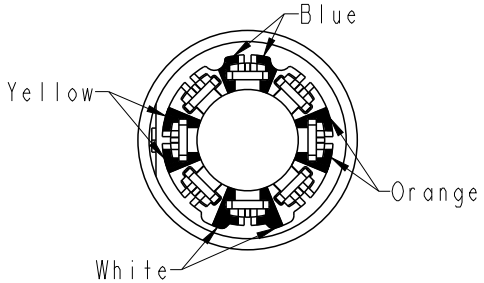

View A

UNIT:mm

TOLERANCE
.X ±0.25
.XX ±0.1
.XXX ±0.05
ANGLES ±1°

TITLE: M12 D-SHLD, SCREW CABLE W/O SR, M, M, FI IDC			
SCALE 1:1	SIZE A4	SHEET 1 OF 1	
REV. C	WC-REV. .0	QC:Inspection item	

Amphenol LTW
安費諾亮泰企業股份有限公司

ITEM NO	DRAWN BY Yunchen	DATE 2025/08/27
DWG NO MSDS-XXBMMD-SL8002	CHECKED BY Wen	DATE 2025/08/27
CUSTOMER ALTW	APPROVED BY Aric	DATE 2025/08/27

W10814-03-XX01A2

THIS DOCUMENT IS SUBJECT TO CHANGE WITHOUT NOTICE. IT IS CONFIDENTIAL AND A PROPERTY OF Amphenol LTW. DISCLOSURE TO THIRD PARTY HAS TO BE AUTHORIZED BY Amphenol LTW.

Downloaded from Arrow.com.