Alle Rechte vorbehalten/ *All rights reserved*

Mating face according to MIL-C-24308 / DIN 41 652 / CECC 75301-802

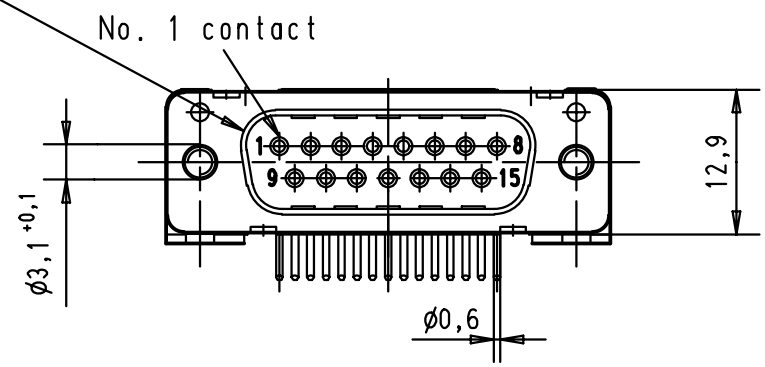

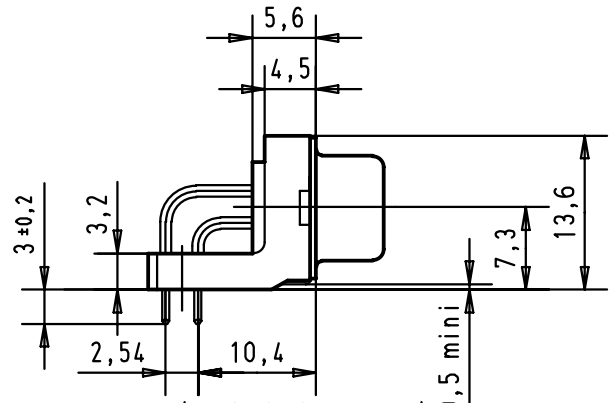

Printed board layout(1,6±0,2 thick)
View componemt side
(PCB plating = Tin)

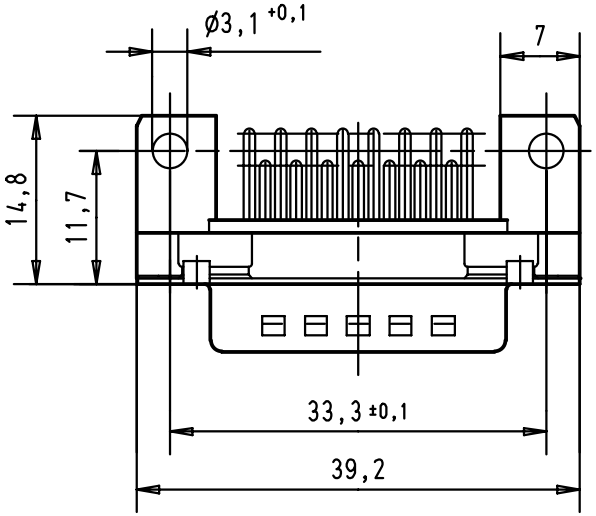

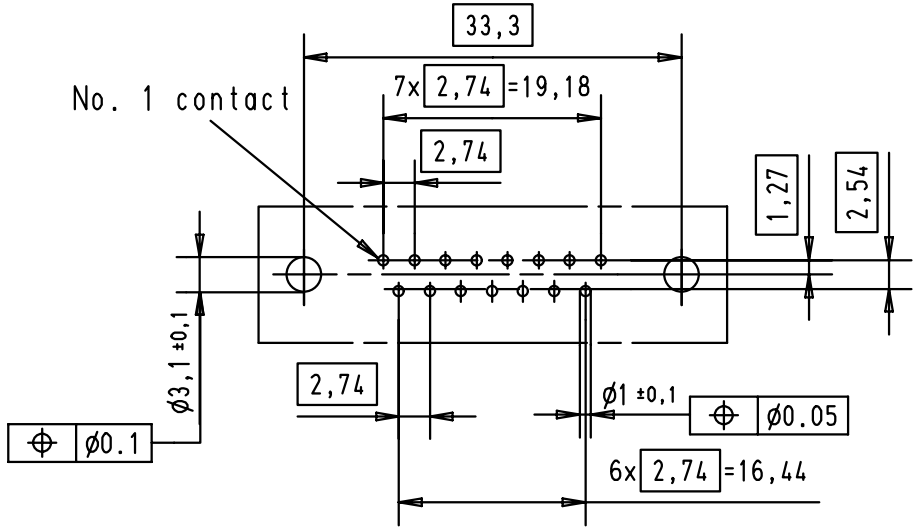

Part number	nut thread	Performance level	Mod.	Dat.	Name
09 66 222 6801	M3	2			
09 66 222 7801	M3	3			
09 66 222 5801	M3	0,76 µm Au			
09 66 222 6802	4-40 UNC	2			
09 66 222 7802	4-40 UNC	3			
09 66 222 5802	4-40 UNC	0,76 µm Au	29733	23-NOV-01	JB

	Dat.	Name
Detail.	23-NOV-01	JB
Insp.		
Stand.		

All Dim. in mm
Orig. Size DIN A 4

D-Sub male standard 15 poles with solder pins and nuts

Maßstab/ *Scale* 1,5:1

HARTING EURL
F-95972 Paris

TB 09 66 222 X80X

Sub.

Blatt/ *Page* 1

Downloaded from Arrow.com.