Series 66 Protective Covers

for MIL-DTL-38999 Series II Connectors

660-014 Plug Cover

M38999/II Plug Cover

660-014 protective cover fits MIL-DTL-38999 Series II bayonet plug connectors including MS27473 and MS27484. Aluminum or stainless steel, with stainless steel fittings and bayonet pins. Silicone gasket.

PART NUMBER

660-014 M 18 F 5 -68

Base P/N	660-014
Material/Finish	*See Table 1*
Shell Size	08 10 12 14 16 18 20 22 24
Attachment Type	N No Attachment *See Table 2 for Attachment Types*
Attachment Length	***Omit for Attachment Type N*** *Length in One Inch Increments*
Attachment Ring	***Omit for Attachment Types N and SK*** -00 No Ring *See Table 3 for Attachment Ring Codes*

TABLE 1 MATERIAL / FINISH

Aluminum		Stainless Steel	
C	Black Anodize	Z1	Passivate
M	Electroless Nickel		
NF	Olive Drab Cadmium		
MT	Nickel-PTFE		
ZR	Black Zinc-Nickel		
TZ	Tin-Zinc		

TABLE 2 ATTACHMENT TYPE

D —
SST Bead Chain
.125 (3.2) diameter, size 6, -65 to +200 °C

F — 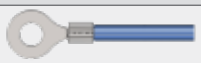
Wire Rope, Blue Nylon Jacket
6/6 nylon over stainless steel rope, fair flexibility, good abrasion resistance, -55 to +100 °C

G —
Black Nylon Rope
Very flexible, good abrasion and fuel resistance, .094 (2.4) diameter, -55 to +100 °C

H — 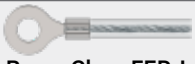
Wire Rope, Clear FEP Jacket
Clear FEP jacket over SST rope, fair flexibility, good abrasion resistance, .100" diameter, -65 to +200 °C

S —
Sash Chain
#8 sash chain, stainless steel.
Length tolerance is ± one link .280 (7.1)

SK —
Nylon Rope with Slip Knot
Very flexible, good abrasion and fuel resistance, .094 (2.4) diameter. Length includes .5" (13mm) dia. loop, -55 to +100 °C

T —
SST Wire Rope, No Jacket
Good flexibility, good abrasion resistance, .047 (1.2) diameter, passivated, -65 to +200 °C

U —
Wire Rope, Black Polyurethane
Stainless steel rope with black polyurethane coating, flexible, excellent abrasion resistance and resistance to fuels, .080" (2mm) diameter, -55 to +125 °C

Shell Size	ø E ± .015 (0.4) In.	ø E ± .015 (0.4) mm.	ø F Max In.	ø F Max mm.
08	.473	12.0	.720	18.3
10	.590	15.0	.850	21.6
12	.750	19.1	1.000	25.4
14	.875	22.2	1.130	28.7
16	1.000	25.4	1.250	31.8
18	1.125	28.6	1.380	35.1
20	1.250	31.8	1.500	38.1
22	1.375	34.9	1.630	41.4
24	1.500	38.1	1.750	44.5

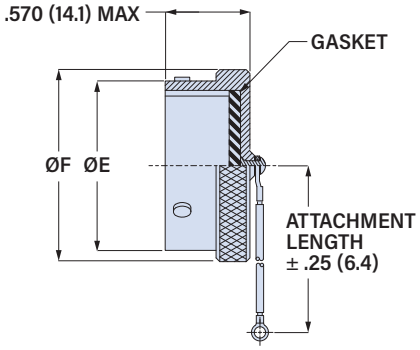

TABLE 3 ATTACHMENT RING

EYELET		STYLE A RING		STYLE B RING		SPLIT RING	
Code	Eyelet I.D. ± .010 (0.3)	Code	Ring I.D. ± .015 (0.4)	Code	Ring I.D. ± .015 (0.4)	Code	Ring I.D. ± .015 (0.4)
-06	.125 (3.2)	-095	.312 (7.9)	-10	.593 (15.1)	-50	.425 (10.8)
-01	.140 (3.6)	-100	.391 (9.9)	-12	.718 (18.2)	-52	.485 (12.3)
-09	.156 (4.0)	-101	.516 (13.1)	-13	.765 (19.4)	-54	.640 (16.3)
-05	.167 (4.2)	-103	.641 (16.3)	-14	.844 (21.4)	-56	.750 (19.1)
-02	.182 (4.6)	-104	.708 (18.0)	-15	.890 (22.6)	-58	.890 (22.6)
-03	.191 (4.9)	-105	.766 (19.5)	-17	1.015 (25.8)	-60	1.015 (25.8)
-04	.197 (5.0)	-106	.896 (22.8)	-19	1.140 (29.0)	-62	1.095 (27.8)
-07	.218 (5.5)	-107	1.016 (25.8)	-20	1.203 (30.6)	-64	1.130 (28.7)
		-108	1.141 (29.0)	-21	1.265 (32.1)	-66	1.250 (31.8)
CABLE TIE		-208	1.203 (30.6)	-22	1.343 (34.1)	-68	1.350 (34.3)
		-109	1.266 (32.2)	-24	1.484 (37.7)	-70	1.375 (34.9)
		-110	1.391 (35.3)	-27	1.640 (41.7)	-72	1.485 (37.7)
		-111	1.521 (38.6)	-29	1.765 (44.8)	-74	1.625 (41.3)
-WS		-112	1.641 (41.7)	-30	1.890 (48.0)	-76	1.750 (44.5)
Black 6/6 nylon cable tie 1.77 (45.0) max. wire bundle dia.		-113	1.766 (44.9)	-31	1.953 (49.6)	-80	1.980 (50.3)
		-114	1.891 (48.0)	-33	2.077 (52.8)	-84	2.235 (56.8)
		-115	2.078 (52.8)	-36	2.187 (55.5)	-86	2.310 (58.7)
		-116	2.406 (61.1)	-40	2.406 (61.1)	-88	2.475 (62.9)
		-117	2.510 (63.8)	-44	2.656 (67.5)	-90	2.655 (67.4)

© 2022 Glenair, Inc • 1211 Air Way, Glendale, CA 91201 • 818-247-6000 • www.glenair.com • U.S. CAGE code 06324 • Circular Connector Accessories

Dimensions in Inches (millimeters) are subject to change without notice.

Downloaded from Arrow.com.