ESS ESST Series

ESS010W	6-10 W
ESS015W	11-15 W
ESS020W	16-20 W
ESS030W	21-30 W
ESST040W	31-40 W

6 to 40 W Constant Current LED Drivers with Tri-Mode Dimming™ (TRIAC, ELV & 0-10 V)

Nominal Input Voltage	Max. Output Power	Output Voltage	Output Current	Efficiency	Max. Case Temperature	THD	Power Factor	Dimming Method	Dimming Range	Startup Time
120 to 277 Vac	40 W	6 to 56 Vdc	180 to 1750 mA	up to 87% typical	90°C (measured at the hot spot)	< 20%	> 0.9	Forward-Phase, Reverse-Phase & 0 - 10V	1 - 100%	400 ms

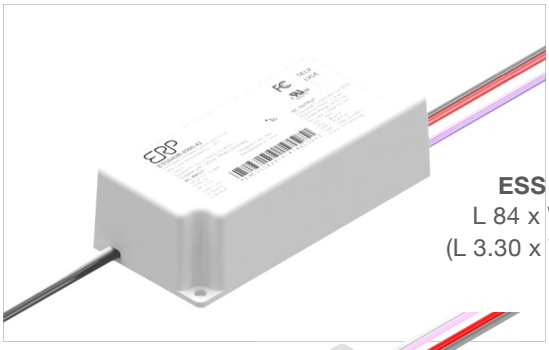

ESS Plastic Case:
L 84 x W 40 x H 25 mm
(L 3.30 x W 1.57 x H 0.99 in)

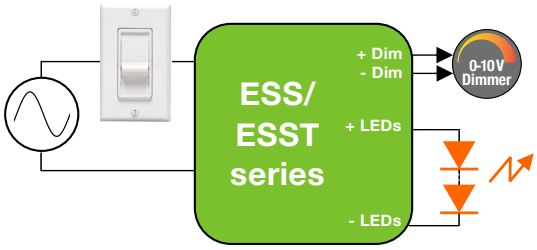

ESST Thermally Enhanced Plastic Case (ESST040 ONLY):
L 84 x W 40 x H 27 mm
(L 3.30 x W 1.57 x H 1.06 in)

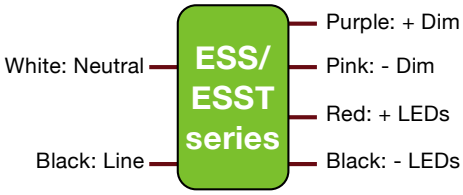

FEATURES

- Compatible with TRIAC (forward-phase or leading-edge), ELV (reverse-phase or trailing-edge) and 0-10 V dimmers
- TRIAC and ELV dimming at 120 Vac only
- 90°C maximum case hot spot temperature
- Class 2 power supply
- Lifetime: 50,000 hours at 70°C case hot spot temperature
- IP64-rated (IP66 for ESST) case with silicone-based potting
- Protections: output open load, over-current and short-circuit (hiccup), and over-temperature with auto recovery
- Conducted and radiated EMI: Compliant with FCC CFR Title 47 Part 15 Class B (120 Vac) and Class A (277 Vac)
- Complies with ENERGY STAR®, DLC (DesignLight Consortium®) and CA Title 24 technical requirements

5 Year Warranty - 5 Year Warranty - 5

CA Title 24

APPLICATIONS

- Indoor & outdoor
- Recessed lighting (downlights)
- Commercial & residential lighting
- Architectural lighting
- Office Lighting

Downloaded from Arrow.com.

6 to 40 W Constant Current LED Drivers with Tri-Mode Dimming™ (TRIAC, ELV & 0-10 V)

1 - ORDERING INFORMATION

Ordering Part Number	Nominal Input Voltage (Vac)	Iout (mA)	Max Output Power (W)	Vout min (Vdc)	Vout Nom (Vdc)	Vout Max (Vdc)*	Open Loop (no load) Voltage (Vdc)
120 TO 277 VAC NOMINAL VOLTAGE							
ESS010W: up to 10 W							
ESS010W-0180-42	120 to 277	180	7.6	24	37.8	42	50
ESS010W-0180-42-XL(2)	120 to 277	180	7.6	24	37.8	42	50
ESS010W-0200-42	120 to 277	200	8.4	24	37.8	42	50
ESS010W-0200-42-XL(2)	120 to 277	200	8.4	24	37.8	42	50
ESS010W-0250-42	120 to 277	250	10.5	24	37.8	42	50
ESS010W-0250-42-Z1(1)	120 to 277	250	10.5	24	37.8	42	50
ESS010W-0350-24	120 to 277	350	8.4	14	22	24	31.2
ESS010W-0500-12	120 to 277	500	6.0	6	10.8	12	16
ESS010W-0500-18	120 to 277	500	9.0	10	16.2	18	25
ESS010W-0700-13-Z1(1)	120 to 277	700	9.1	8	11.7	13	16
ESS010W-0750-12	120 to 277	750	9.0	6	10.8	12	16
ESS015W: 11 to 15 W							
ESS015W-0300-42	120 to 277	300	12.6	24	37.8	42	50
ESS015W-0300-42-XL(2)	120 to 277	300	12.6	24	37.8	42	50
ESS015W-0350-32	120 to 277	350	11.2	21	28.8	32	41.6
ESS015W-0350-42	120 to 277	350	14.7	24	37.8	42	50
ESS015W-0350-42-XL(2)	120 to 277	350	14.7	24	37.8	42	50
ESS015W-0350-42-Z1(1)	120 to 277	350	14.7	24	37.8	42	50
ESS015W-0440-25	120 to 277	440	11.0	19	22.5	25	32.5
ESS015W-0440-34	120 to 277	440	15.0	24	30.6	34	44.2
ESS015W-0700-18	120 to 277	700	12.6	10	16.2	18	25
ESS015W-1000-12	120 to 277	1000	12.0	6	10.8	12	16
ESS015W-1050-14	120 to 277	1050	14.7	8	12.6	14	16
ESS015W-1050-14-Z1(1)	120 to 277	1050	14.7	8	12.6	14	16
ESS020W: 16 to 20 W							
ESS020W-0350-56	120 to 277	350	19.6	40	50	56	60
ESS020W-0400-42	120 to 277	400	16.8	24	37.8	42	50
ESS020W-0400-42-XL(2)	120 to 277	400	16.8	24	37.8	42	50
ESS020W-0450-42	120 to 277	450	18.9	24	37.8	42	50
ESS020W-0500-32	120 to 277	500	16.0	21	28.8	32	41.6
ESS020W-0500-34	120 to 277	500	17.0	24	30.6	34	44.2
ESS020W-0700-24	120 to 277	700	16.8	14	22	24	31.2
ESS020W-1400-14	120 to 277	1400	19.6	8	12.6	14	16
ESS020W-1400-14-Z1(1)	120 to 277	1400	19.6	8	12.6	14	16
ESS030W: 21 to 30 W							
ESS030W-0500-42	120 to 277	500	21.0	24	37.8	42	50
ESS030W-0500-42-Z1(1)	120 to 277	500	21.0	24	37.8	42	50
ESS030W-0550-42	120 to 277	550	23.1	24	37.8	42	50
ESS030W-0550-42-XL(2)	120 to 277	550	23.1	24	37.8	42	50
ESS030W-0620-42	120 to 277	620	26.0	24	37.8	42	50
ESS030W-0700-32	120 to 277	700	22.4	21	28.8	32	41.6
ESS030W-0700-42	120 to 277	700	29.4	24	37.8	42	50
ESS030W-0700-42-XL(2)	120 to 277	700	29.4	24	37.8	42	50
ESS030W-0700-42-Z1(1)	120 to 277	700	29.4	24	37.8	42	50
ESS030W-0900-27	120 to 277	900	24.3	20	24.3	27	35
ESS030W-1050-21	120 to 277	1050	22.1	14	18.9	21	27.3
ESS030W-1100-27	120 to 277	1100	29.7	20	24.3	27	35
ESS030W-1750-14	120 to 277	1750	24.5	8	12.6	14	16
ESS030W-1750-14-Z1(1)	120 to 277	1750	24.5	8	12.6	14	16
ESST040W: 31 to 40 W							
ESST040W-0800-42	120 to 277	800	33.6	24	37.8	42	50
ESST040W-0850-42	120 to 277	850	35.7	24	37.8	42	50
ESST040W-0900-42	120 to 277	900	37.8	24	37.8	42	50
ESST040W-1400-24	120 to 277	1400	33.6	14	22	24	31.2
ESST040W-1400-27	120 to 277	1400	37.8	20	24.3	27	35.1

** The forward voltage (Vf) of the LED load should not exceed Vout Max. of the driver under worst case field operating conditions which are the Vf max. of the LED load under lowest temperature and highest forward current conditions. As a general design guideline, the nominal LED load Vf measured at the operating current and at room temperature should be ≤ Vout Nom. of the driver.*

Notes

1)Models with the "-Z1" suffix exhibit a non-linear 0-10V dimming profile: 10V to 8.1V=100%, 1V to 0.8V=1%, Dim-to-off <0.8.

2)Models with the "-XL" suffix have extended wire leads 12 in (300 mm) long.

Downloaded from Arrow.com.

6 to 40 W Constant Current LED Drivers with Tri-Mode Dimming™ (TRIAC, ELV & 0-10 V)

2 - INPUT SPECIFICATION (@25°C ambient temperature)

	Units	Minimum	Typical	Maximum	Notes
Input Voltage Range (Vin)	Vac	90	120, 277	305	•The rated output current for each model is achieved at Vin≥108 Vac & at Vin≥198 Vac for ESSxxxW models. •At nominal load
Input Frequency Range	Hz	47	60	63	
Input Current (Iin)	A			0.35 A @ 120 Vac 0.18 A @ 277 Vac	
Power Factor (PF)		0.9	> 0.9		•At nominal input voltage and with nominal LED voltage and no dimmer •For derivative models < 10W, PF ≥ 0.8 at 277 Vac only •For derivative models < 5W, PF ≥ 0.7 at 277 Vac only
Inrush Current	A		120 Vac / 277 Vac ESS010 3.6 / 9.7 ESS015 5.9 / 16.7 ESS020 3.2 / 9.0 ESS030 4.6 / 13.0 ESST040 5.0 / 16.3		•Meets NEMA-410 requirements. •At any point on the sine wave and 25°C
Leakage Current	µA			250 µA @ 120 Vac 600 µA @ 277 Vac	Measured per IEC60950-1.
Input Harmonics	Complies with IEC61000-3-2 for Class C equipment				
Total Harmonics Distortion (THD)				20%	•At nominal input voltage and nominal LED voltage •Complies with DLC (Design Light Consortium) technical requirements.
Efficiency	%	-	up to 87%	-	•Measured with nominal input voltage, a full sinusoidal wave form and without dimmer connected. •Models in the ESS010 and ESS015 series have a nominal efficiency of 82%.
Isolation	The AC input to the main DC output is isolated and meets Class II reinforced/double insulation power supply. ⧈				

3 - OUTPUT SPECIFICATION (@25°C ambient temperature)

	Units	Minimum	Typical	Maximum	Notes
Output Voltage (Vout)	Vdc	6		56	See ordering information for details
Output Current (Iout)	mA	180		1750	•See ordering information for details •The rated output current for each model is achieved at Vin≥108 Vac & at Vin≥198 Vac for ESSxxxW models.
Output Current Regulation	%	-5		5	•At nominal AC line voltage •Includes load and current set point variations
Output Current Overshoot	%	-	-	10	The driver does not operate outside of the regulation requirements for more than 500 ms during power on with nominal LED load and without dimmer.
Ripple Current	≤ 40% of rated output current for each model				•Measured at nominal LED voltage and nominal input voltage without dimming •Calculated in accordance with the IES Lighting Handbook, 9th edition
Dimming Range	%	1		100	•The dimming range is dependent on each specific dimmer. It may not be able to achieve 1% dimming with some dimmers. •When testing, if light is measured, dimming range is based on light output. If no light is measured, dimming range is based on percentage of output current. •Dimming performance is optimal when the driver is operated at its nominal output voltage matching the LED nominal Vf (forward voltage). Dimming performance may vary when the driver is operated near its minimum output voltage.
Start-up Time	ms			400	•Measured from application of AC line voltage to the time where light is visible (about 10% of rated output current)
				500	•Measured from application of AC line voltage to 100% light output •Complies with California Title 24 and ENERGY STAR® luminaire specification

Downloaded from Arrow.com.

6 to 40 W Constant Current LED Drivers with Tri-Mode Dimming™ (TRIAC, ELV & 0-10 V)

4 - 0-10 V DIMMING CONTROL (@25°C ambient temperature)

	Units	Minimum	Typical	Maximum	Notes
+Dim Signal, -Dim Signal	The ESS/ESST series operate only with 0-10V dimmers that sink current. The method to dim the output current of the driver is done via the +Dim/-Dim Signal pins. The +Dim/-Dim signal pins can be used to adjust the output setting via a standard commercial wall dimmer, an external control voltage source (0 to 10 Vdc), or a variable resistor when using the recommended number of LEDs. The dimming input permits 1% to 100% dimming.				
Dimming Range (% of Iout)	%	1		100	•The dimming range is dependent on each specific dimmer. It may not be able to achieve 1% dimming with some dimmers. •Dimming performance is optimal when the driver is operated at its nominal output voltage matching the LED nominal Vf (forward voltage). Dimming performance may vary when the driver is operated near its minimum output voltage.
Current Supplied by the +Dim Signal Pin	mA			1	
Output Current Tolerance While Being Dimmed	%			±8	The tolerance of the output current while being dimmed is ≤ +/-8% until down to 1V.
Isolation	The 0-10 V circuit is isolated from the AC input and meets Class II reinforced/double insulation power supply. ⧈				

5 - ENVIRONMENTAL CONDITIONS

	Units	Minimum	Typical	Maximum	Notes
Operating Case Temperature (Tc)	°C	-30		+70	Case temperature measured at the hot spot •tc (see label on page 14)
Maximum Case Temperature (Tc)	°C			+90	Case temperature measured at the hot spot •tc (see label on page 14)
Storage Temperature	°C	-40		+85	
Humidity	%	5	-	95	Non-condensing
Cooling	Convection cooled				
Acoustic Noise	dBA			22	Measured at a distance of 1 foot (30 cm), without any dimmer
Mechanical Shock Protection	per EN60068-2-27				
Vibration Protection	per EN60068-2-6 & EN60068-2-64				
MTBF	> 300,000 hours when operated at nominal input and output conditions, and at Tc ≤ 70°C				
Lifetime	hours	50,000			•At Tc ≤ 70°C maximum case hot spot temperature (see hot spot •tc on label on page 14) •Other models in the ESS series have a longer lifetime. For example, the ESS030W-0620-42 (26 W) has a 109,000-hour lifetime Tc=70°C. See details in section 8.
Warranty	5 years at Tc ≤ 70°C				

Downloaded from Arrow.com.

6 to 40 W Constant Current LED Drivers with Tri-Mode Dimming™ (TRIAC, ELV & 0-10 V)

6 - EMC COMPLIANCE AND SAFETY APPROVALS

EMC Compliance			
Conducted and Radiated EMI		FCC CFR Title 47 Part 15 Class B at 120 Vac and Class A at 277 Vac	
Harmonic Current Emissions		IEC61000-3-2	For Class C equipment
Voltage Fluctuations & Flicker		IEC61000-3-3	
Immunity Compliance	**ESD (Electrostatic Discharge)**	IEC61000-4-2	6 kV contact discharge, 8 kV air discharge, level 3
	RF Electromagnetic Field Susceptibility	IEC61000-4-3	3 V/m, 80 - 1000 MHz, 80% modulated at a distance of 3 meters
	Electrical Fast Transient	IEC61000-4-4	± 2 kV on AC power port for 1 minute, ±1 kV on signal/control lines
	Surge	IEC61000-4-5	± 1 kV line to line (differential mode) /± 2 kV line to common mode ground (tested to secondary ground) on AC power port, ±0.5 kV for outdoor cables
		ANSI/IEEE c62.41.1-2002 & c62.41.2-2002 category A, 2.5 kV ring wave	
	Conducted RF Disturbances	IEC61000-4-6	3V, 0.15-80 MHz, 80% modulated
	Voltage Dips	IEC61000-4-11	>95% dip, 0.5 period; 30% dip, 25 periods; 95% reduction, 250 periods

Safety Agency Approvals	
UL	UL8750 recognized Class 2
cUL	CAN/CSA C22.2 No. 250.13-14 LED equipment for lighting applications

Safety					
	Units	**Minimum**	**Typical**	**Maximum**	**Notes**
Hi Pot (High Potential) or Dielectric voltage-withstand	Vdc	4242			• Insulation between the input (AC line and Neutral) and the output • Tested at the RMS voltage equivalent of 3000 Vac

7 - PROTECTION FEATURES

Under-Voltage (Brownout)
The ESS/ESSTxxxW series provides protection circuitry such that an application of an input voltage below the minimum stated in paragraph 1 (Input Specification) shall not cause damage to the driver.

Short Circuit
The ESS/ESSTxxxW series is protected against short-circuit such that a short from any output to return shall not result in a fire hazard or shock hazard. The driver shall hiccup as a result of a short circuit or over current fault. Removal of the fault will return the driver to within normal operation. The driver shall recover, with no damage, from a short across the output for an indefinite period of time.

Internal Over temperature Protection
The ESS/ESSTxxxW series incorporates circuitry that prevents internal damage due to an over temperature condition. An over temperature condition may be a result of an excessive ambient temperature or as a result of an internal failure. When the over temperature condition is removed, the driver shall automatically recover.

Output Open Load
When the LED load is removed, the output voltage of the ESS/ESSTxxxW series is typically limited to 1.3 times the maximum output voltage of each model.

Downloaded from Arrow.com.

6 to 40 W Constant Current LED Drivers with Tri-Mode Dimming™ (TRIAC, ELV & 0-10 V)

8 - PREDICTED LIFETIME VERSUS CASE AND AMBIENT TEMPERATURE

Lifetime is defined by the measurement of the temperatures of all the electrolytic capacitors whose failure would affect light output under the nominal LED load and worst case AC line voltage. The graphs in figure 1 & 1bis are determined by the electrolytic capacitor with the shortest lifetime, among all electrolytic capacitors. It represents a worst case scenario in which the LED driver is powered 24 hours/day, 7 days/week. The lifetime of an electrolytic capacitor is measured when any of the following changes in performance are observed:

1) Capacitance changes more than 20% of initial value

2) Dissipation Factor (tan δ): 150% or less of initial specified value

3) Equivalent Series Resistance (ESR): 150% or less of initial specified value

4) Leakage current: less of initial specified value

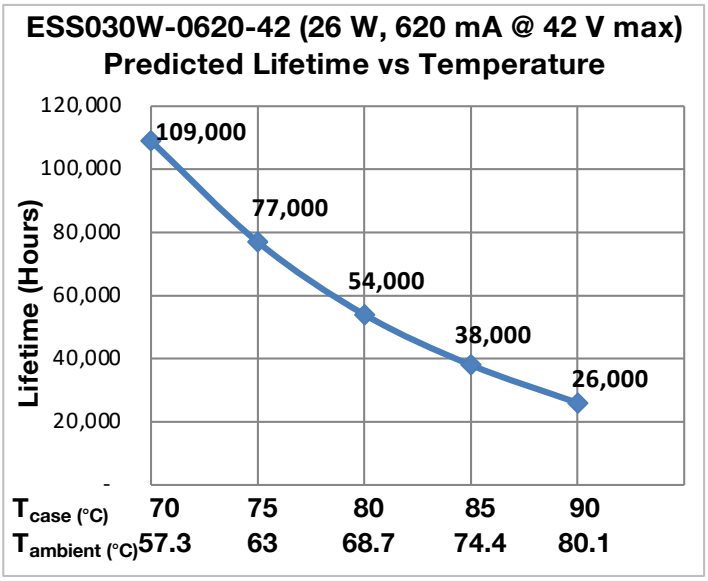

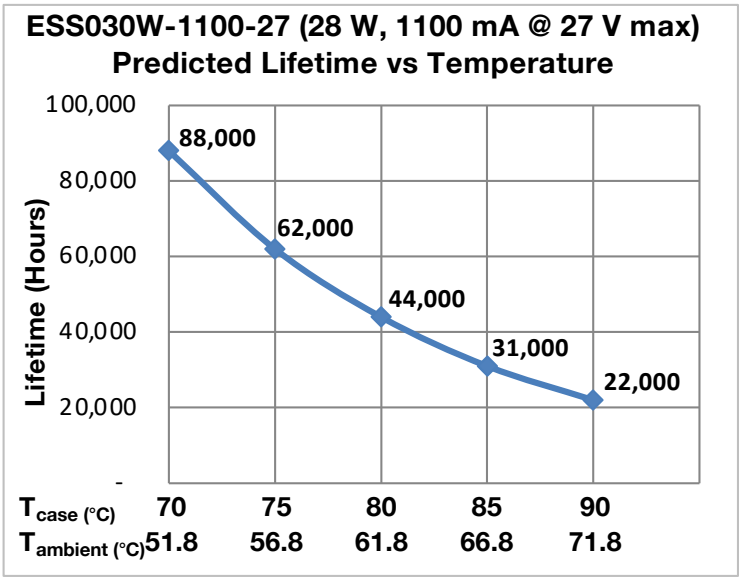

Figure 1

Notes:

- *The ambient temperature $T_{ambient}$ and the differential between $T_{ambient}$ and T_{case} mentioned in the above graphs are relevant only as long as both the driver and the light fixture are exposed to the same ambient room temperature. If the LED driver is housed in an enclosure or covered by insulation material, then the ambient room temperature is no longer valid. In this situation, please refer only to the case temperature T_{case}.*
- *It should be noted the graph "Lifetime vs. Ambient Temperature" may have an error induced in the final application if the mounting has restricted convection flow around the case. For applications where this is evident, the actual case temperature measured at the Tc point in the application should be used for reliability calculations.*

Downloaded from Arrow.com.

6 to 40 W Constant Current LED Drivers with Tri-Mode Dimming™ (TRIAC, ELV & 0-10 V)

8 - PREDICTED LIFETIME VERSUS CASE AND AMBIENT TEMPERATURE (CONTINUED)

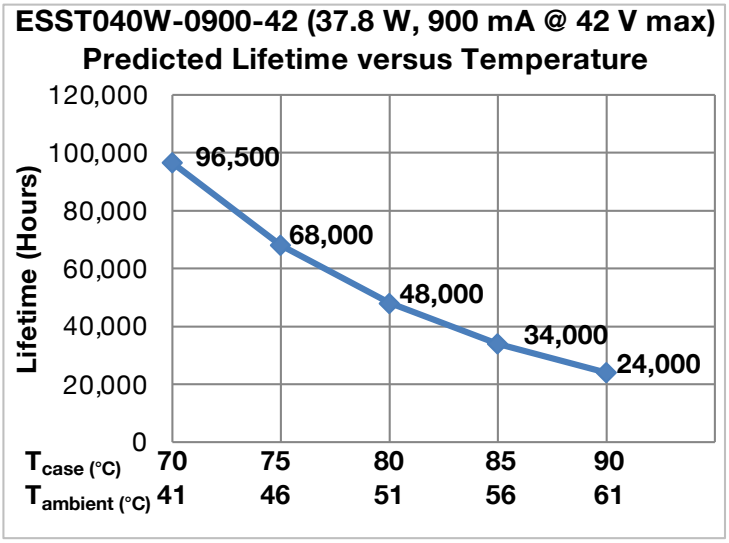

Figure 1 bis

Notes:

- *The ambient temperature $T_{ambient}$ and the differential between $T_{ambient}$ and T_{case} mentioned in the above graphs are relevant only as long as both the driver and the light fixture are exposed to the same ambient room temperature. If the LED driver is housed in an enclosure or covered by insulation material, then the ambient room temperature is no longer valid. In this situation, please refer only to the case temperature T_{case}.*
- *It should be noted the graph "Lifetime vs. Ambient Temperature" may have an error induced in the final application if the mounting has restricted convection flow around the case. For applications where this is evident, the actual case temperature measured at the Tc point in the application should be used for reliability calculations.*

Downloaded from Arrow.com.

6 to 40 W Constant Current LED Drivers with Tri-Mode Dimming™ (TRIAC, ELV & 0-10 V)

9 - PHASE-CUT DIMMING

Dimming of the driver is possible with standard TRIAC-based incandescent dimmers that chop the AC voltage as shown in Figure 2, or with ELV dimmers. During the rapid rise time of the AC voltage when the dimmer turns on, the driver does not generate any voltage or current oscillations, and inrush current is controlled. During the on-time of the AC input, the driver regulates the output current based upon the conduction angle. The RMS value of the driver output current is proportional to the on-time of the AC input voltage. When operating with an incandescent dimmer, the RMS output current varies depending upon the conduction angle and RMS value of the applied AC input voltage. Figure 3 shows the typical output current versus conduction angle at nominal input voltage.

The ESS/ESST series offers tri-mode dimming compatibility with both phase-cut (reverse-phase and forward-phase) and 0–10V dimmers. Phase-cut dimming always has priority over 0-10 V dimming. Please note the compatibility for the different ESS/ESST models:

- ESSxxxW models: TRIAC and ELV dimming only at 120 Vac

When using low power ESS models (specifically < 10 W) with a reverse-phase or forward-phase dimmer, always make sure the minimum required load is applied to the dimmer. Check the dimmer documentation for minimum load requirements.

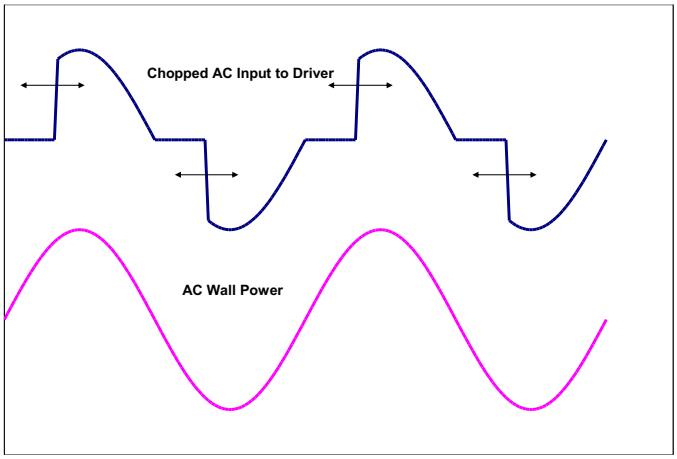

Figure 2

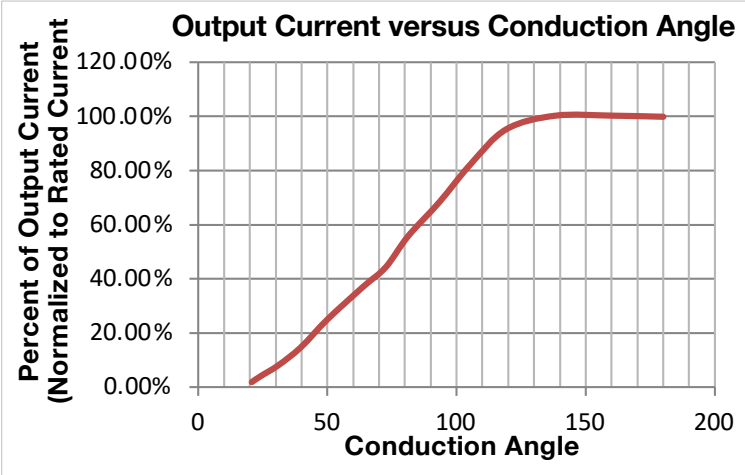

Figure 3

10 - COMPATIBLE PHASE-CUT DIMMERS & DIMMING RANGE

120Vac Dimmers					
Mfg.	**Model**	**Mfg.**	**Model**	**Mfg.**	**Model**
Lutron	S-603PG	**Lutron**	DVELV-303P	**Lutron**	CT-103P
Leviton	IPI06-1LZ	**Lutron**	SELV-300P	**Cooper**	SLC03P
Leviton	6631-2	**Leviton**	6683-IW	**Leviton**	IPE04
Lutron	DVCL-153P	**Leviton**	6161	**Lutron**	MAELV-600
Lutron	DV-600P	**Leviton**	6633-P	**Lutron**	FAELV-500
Lutron	TGCL-153P	**Lutron**	TG-600P	**Lightolier**	ZP260QEW
Lutron	S-600P	**Cooper**	DLC03P	**Cooper**	DAL06P
Leviton	VPE06	**Lutron**	LG-600P		

Dimming compatibility charts are available for each model on the ESS/ESST series page at: erp-power.com.

Downloaded from Arrow.com.

6 to 40 W Constant Current LED Drivers with Tri-Mode Dimming™ (TRIAC, ELV & 0-10 V)

11 - 0-10 V DIMMING

The ESS drivers operate only with 0-10V dimmers that sink current. They are not designed to operate with 0-10V control systems that source current, as used in theatrical/entertainment systems. Developed in the 1980's, the 0-10V sinking current control method is adopted by the International Electrotechnical Commission (IEC) as apart of their IEC Standard 60929 Annex E.

The method to dim the output current of the driver is done via the +Dim/-Dim Signal pins. The +Dim/-Dim Signal pins respond to a 0 to 10 V signal, delivering 1% to 100% of the output current based on rated current for each model. A pull-up resistor is included internal to the driver. When the +Dim wire (purple) is short circuited to the –Dim wire (pink) or to the –LED wire (black), a small amount of current may be present on the output and, in that condition, shimmering may be observed. If the +Dim input is ≤ 1 V and ≥ 0.6 V, the output current is still present, as shown in figure 4. ***Please note that short circuiting the +Dim wire (purple) to the –Dim wire (pink) does not guarantee that the output current is turned off. In some models, the current may turn off when short circuiting the +Dim wire to the –Dim wire. In other models, there may be a small amount of current still present***.
If the +Dim input is > 10 V or open circuited, the output current is programmed to 100% of the rated current.
When not used, the –Dim wire (pink) and the +Dim wire (purple) can be individually capped or cut off. In this configuration, no dimming is possible and the driver delivers 100% of its rated output current.
The maximum source current (flowing from the driver to the 0-10V dimmer) supplied by the +Dim Signal pin is ≤ 1 mA. The tolerance of the output current while being dimmed shall be +/-8% typical until down to 1 V.

The linear 0-10V dimming profile is the default profile across most models of the ESS series. In the linear 0-10V dimming profile, shown in figure 4, 10 V = 100% of the output current and 1 V = 10 % of the output current.
Models with the "-Z1" or "-Y1" suffix exhibit a non-linear 0-10 V dimming profile with dim-to-off, as shown in figure 5:

- Models with the "-Y1" suffix: 10V to 9.1V=100%,1.2V to 0.6V=1%, Dim to off <0.68V.
- Models with the "-Z1" suffix: 10V to 8.1V=100%, 1V to 0.8V=1%, Dim-to-off <0.8V.

Please note the non-linear 0-10V dimming profile with dim-to-off requires the addition of a small plastic dongle (L 33 mm x W 15.7 mm x H 10 mm or L 1.3 in x W 0.62 in x 0.39 in) outside of the driver case.
The non-linear curve is recommended when using standard in wall 0-10 V logarithmic dimmers to avoid having insufficient source current available to pull the dimmer up to 10V and to account for the inability of the dimmer to pull below approximately 0.9V. In these type of installations, the modified transfer function will ensure 100% light output and dimming to 1%, regardless of the number of drivers on the 0-10V dimming line.

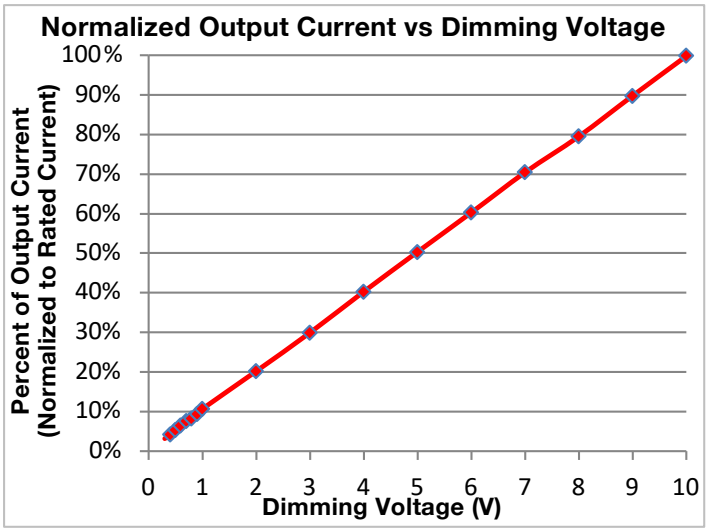

Figure 4

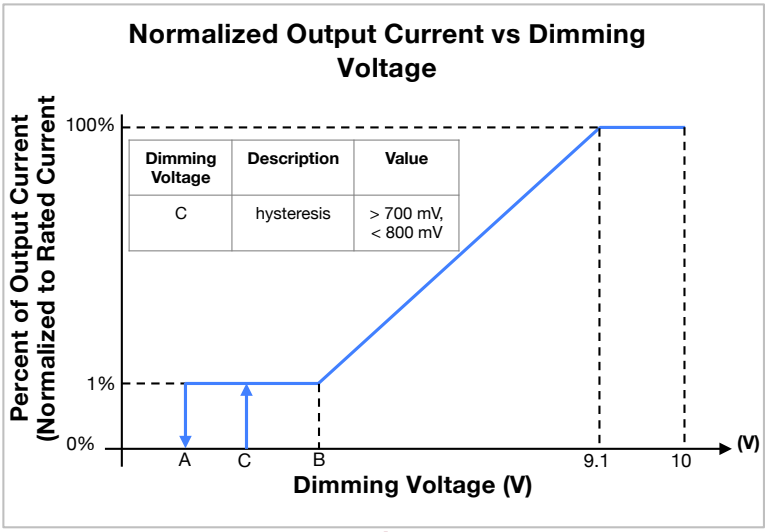

Figure 5

Downloaded from Arrow.com.

6 to 40 W Constant Current LED Drivers with Tri-Mode Dimming™ (TRIAC, ELV & 0-10 V)

11 - 0-10 V DIMMING (CONTINUED)

A fixed or variable resistor can be also used from the +Dim signal pin to the –Dim pin to adjust the output current. Figure 6 show the relationship of the output current to a resistor connected across the 0-10V dimming input. This is a typical graph for the entire ESS/ESST series but is not specific to a particular model. This graph may vary from one model to the next.

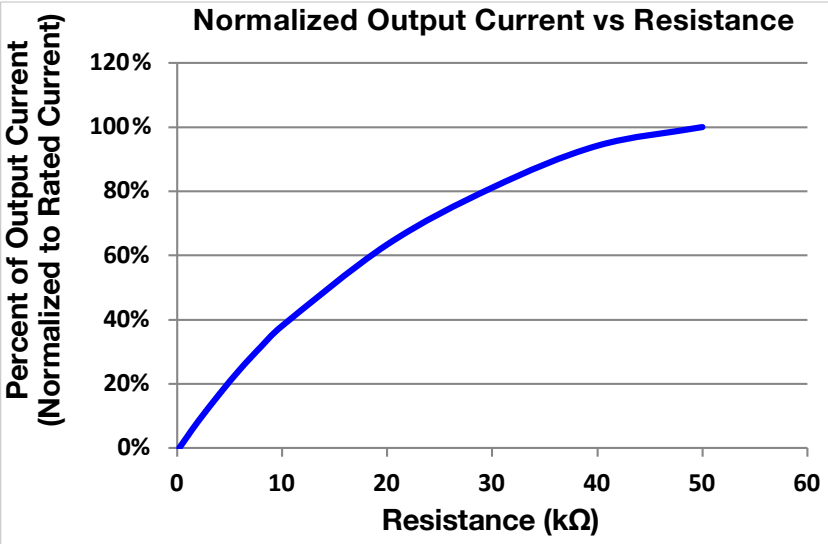

Figure 6

12 - COMPATIBLE 0-10 V DIMMERS

- Lutron, Nova series (part number NFTV)
- Lutron, Diva series (part number DVTV)
- Leviton, IllumaTech series (part number IP710-DL)

Downloaded from Arrow.com.

6 to 40 W Constant Current LED Drivers with Tri-Mode Dimming™ (TRIAC, ELV & 0-10 V)

13 - MECHANICAL DETAILS: ESS010, ESS015, ESS020, ESS030 SERIES

Packaging Options: Plastic case
I/O Connections: Flying leads, 18 AWG on power leads, 22 AWG on 0-10V dimming wires, 152 mm (6 in) long, 105°C rated, stranded, stripped by approximately 9.5mm, and tinned. All the wires, on both input and output, have a 300 V insulation rating.
Ingress Protection: IP64 rated
Flammability Rating: UL94 V-0
Mounting Instructions: The ESS driver case must be secured on a flat surface through the two mounting tabs, shown here below in the case outline drawings.

14 - OUTLINE DRAWINGS: ESS010, ESS015, ESS020, ESS030 SERIES

Dimensions: L 84 x W 40 x H 25.2 mm (L 3.30 x W 1.57 x H 0.99 in)
Volume: 84.7 cm^3 (5.16 in^3)
Weight: 154 g (5.4 oz)

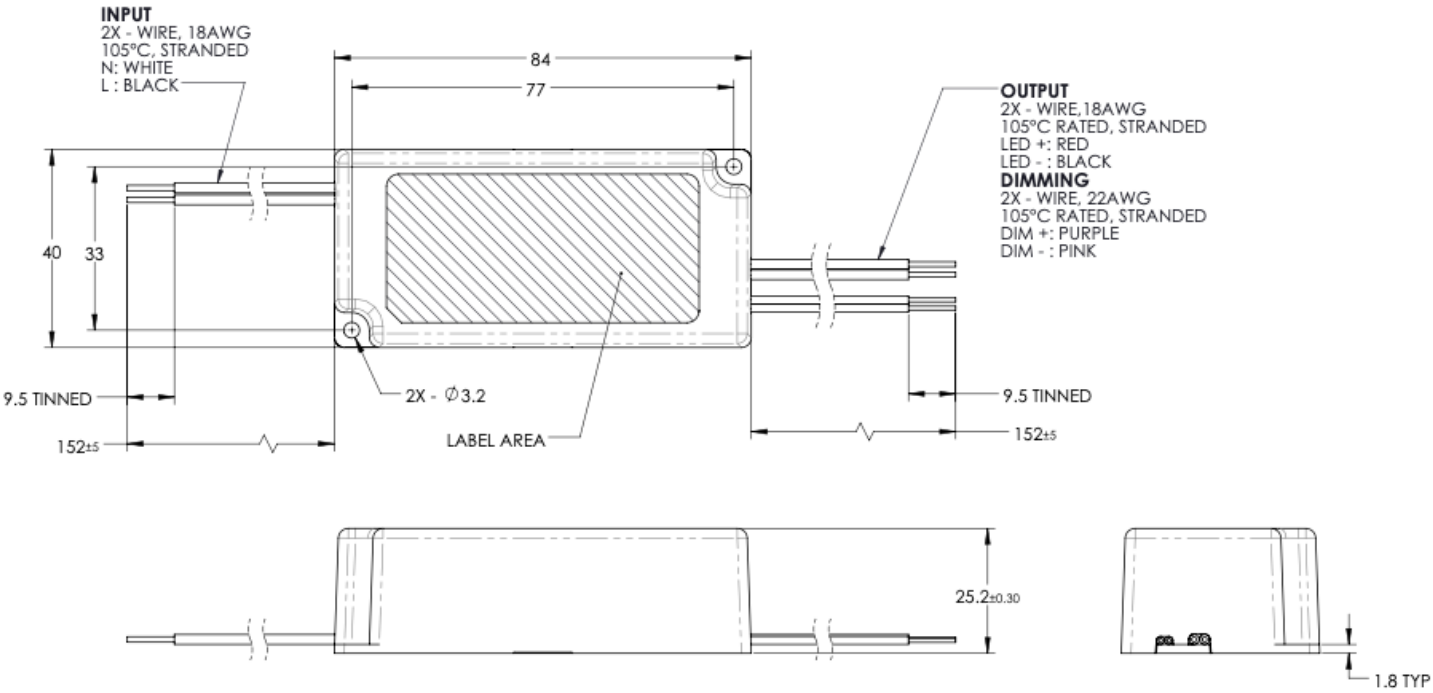

All dimensions are in mm

Figure 7

Downloaded from Arrow.com.

6 to 40 W Constant Current LED Drivers with Tri-Mode Dimming™ (TRIAC, ELV & 0-10 V)

15 - OUTLINE DRAWINGS: ESS010, ESS015, ESS020, ESS030 MODELS WITH "-Y1" and "-Z1" SUFFIX

Dimensions: L 84 x W 40 x H 25.2 mm (L 3.30 x W 1.57 x H 0.99 in)
Volume: 84.7 cm^3 (5.16 in^3)
Weight: 154 g (5.4 oz)

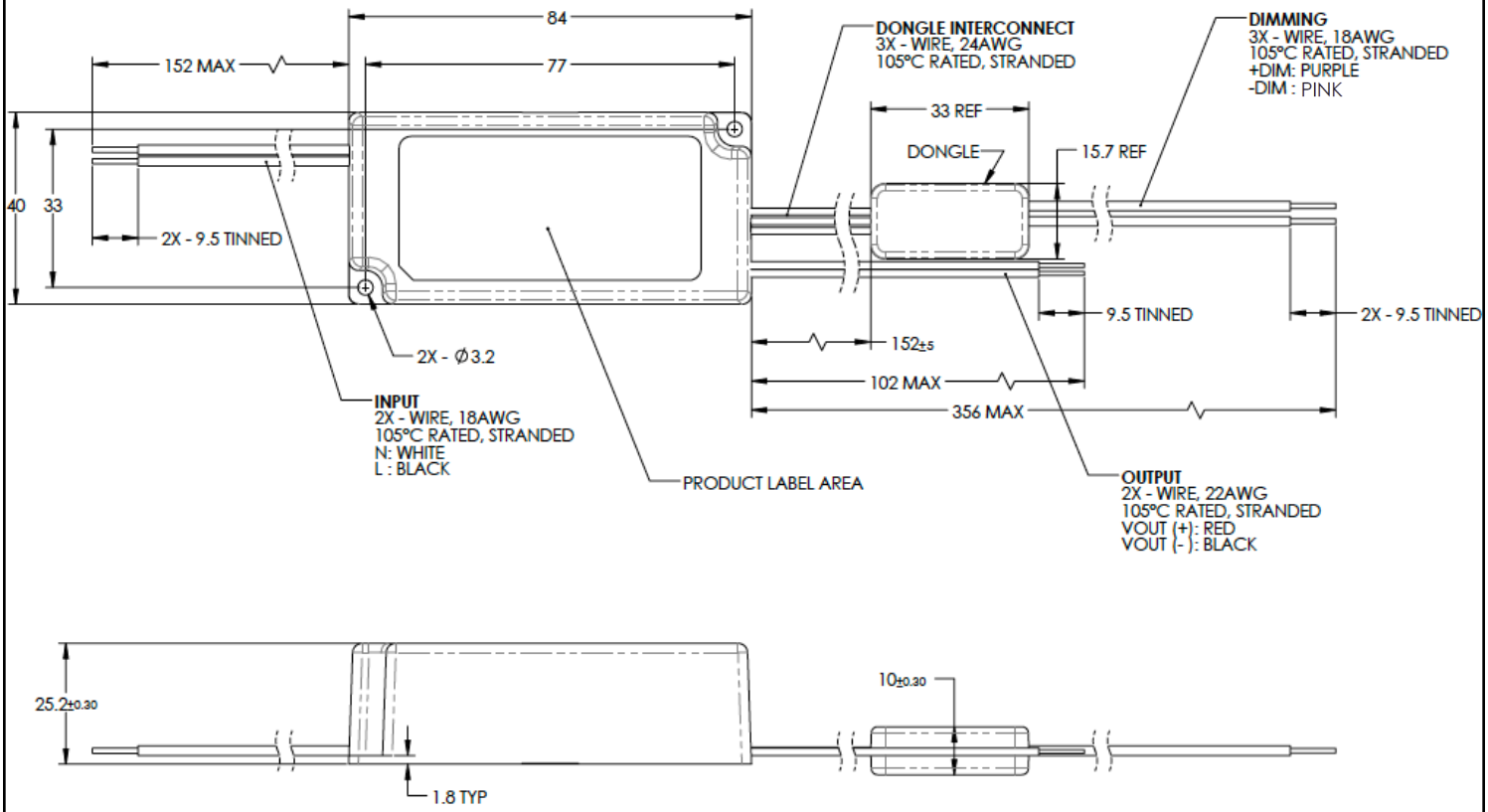

All dimensions are in mm

Figure 8

Downloaded from Arrow.com.

6 to 40 W Constant Current LED Drivers with Tri-Mode Dimming™ (TRIAC, ELV & 0-10 V)

16 - MECHANICAL DETAILS: ESST40 SERIES

Packaging Options: Plastic case
I/O Connections: Flying leads, 18 AWG on power leads, 22 AWG on 0-10V dimming wires, 152 mm (6 in) long, 105°C rated, stranded, stripped by approximately 9.5mm, and tinned. All the wires, on both input and output, have a 300 V insulation rating.
Ingress Protection: IP66 rated
Flammability Rating: UL94 V-0
Mounting Instructions: The ESST driver case must be secured on a flat surface through the two mounting tabs, shown here below in the case outline drawings.

17 - OUTLINE DRAWINGS: ESST40 SERIES

Dimensions: L 84 x W 40 x H 27 mm (L 3.30 x W 1.57 x H 1.06 in)
Volume: 90.7 cm^3 (5.53 in^3)
Weight:

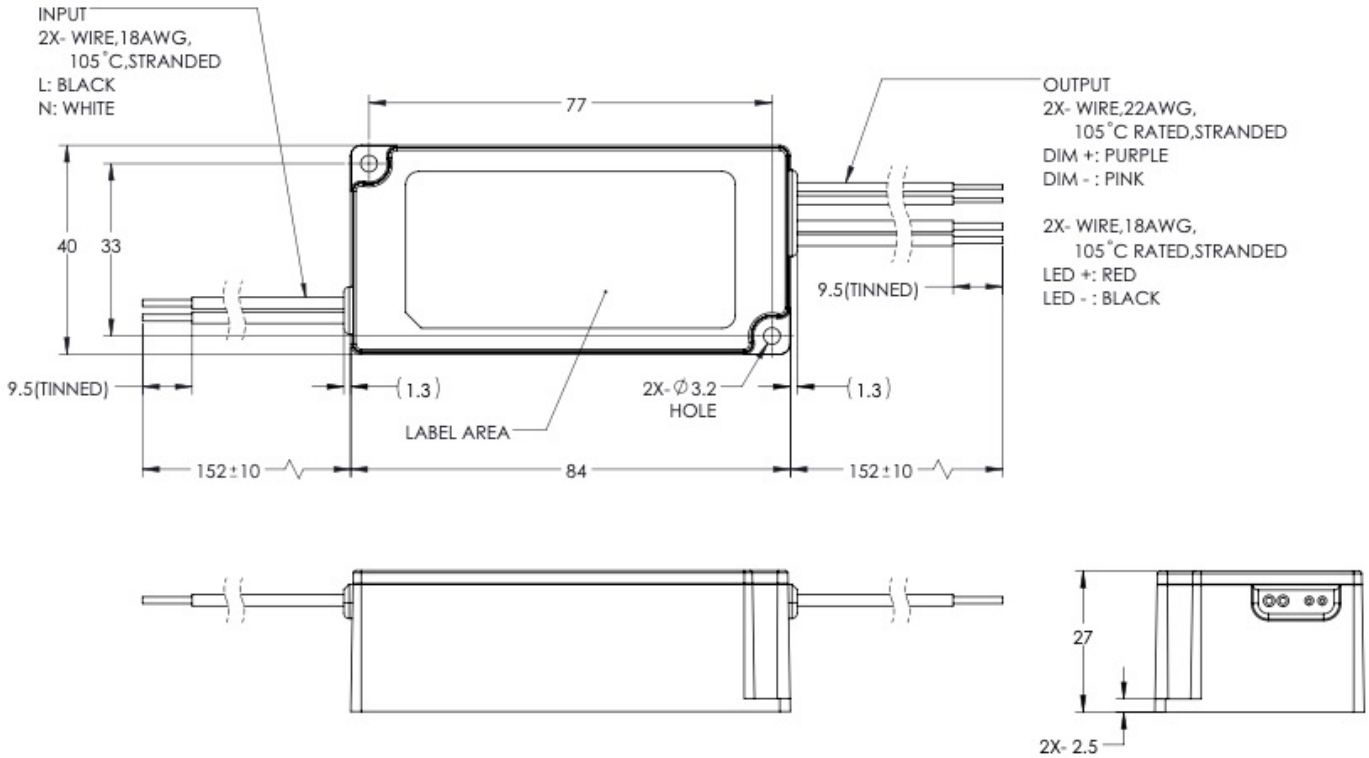

All dimensions are in mm

Figure 9

Downloaded from Arrow.com.

6 to 40 W Constant Current LED Drivers with Tri-Mode Dimming™ (TRIAC, ELV & 0-10 V)

18 - LABELING AND Tc POINT LOCATION

Examples of labels are shows in figure 10 with the ESS015W-0350-42 and in figure 11 with the ESST40W-0900-42.

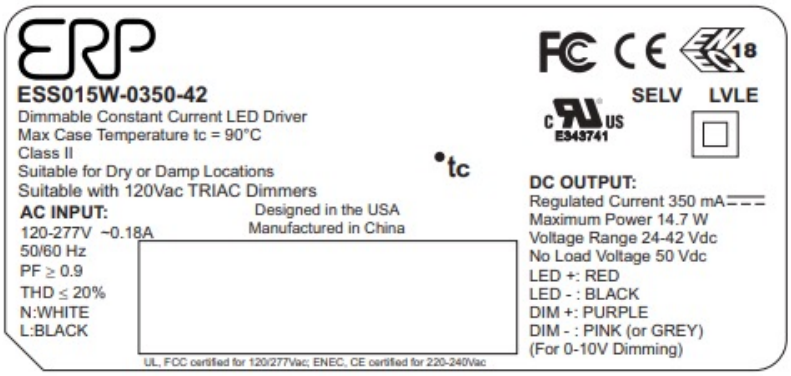

Figure 10

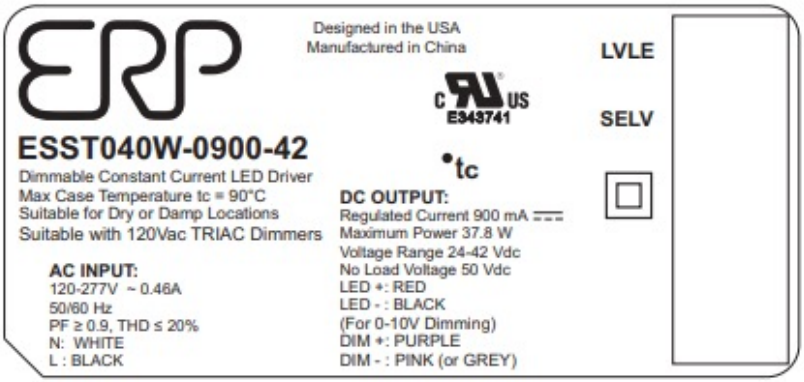

Figure 11

USA Headquarters
Tel: +1-805-517-1300
Fax: +1-805-517-1411
2625 Townsgate Road, Suite 106
Westlake Village, CA 91361, USA

CHINA Operations
Tel: +86-756-6266298
Fax: +86-756-6266299
No. 8 Pingdong Road 2
Zhuhai, Guangdong, China 519060

ERP Power, LLC (ERP) reserves the right to make changes without further notice to any products herein. ERP makes no warranty, representation or guarantee regarding the suitability of its products for any particular purpose, nor does ERP assume any liability arising out of the application or use of any product or circuit, and specifically disclaims any and all liability, including without limitation special, consequential or incidental damages. "Typical" parameters which may be provided in ERP data sheets and/or specifications can and do vary in different applications and actual performance may vary over time. All operating parameters, including "Typicals" must be validated for each customer application by customer's technical experts. ERP does not convey any license under its patent rights nor the rights of others. ERP products are not designed, intended, or authorized for use as components in systems intended for surgical implant into the body, or other applications intended to support or sustain life, or for any other application in which the failure of the ERP product could create a situation where personal injury or death may occur. Should Buyer purchase or use ERP products for any such unintended or unauthorized application, Buyer shall indemnify and hold ERP and its officers, employees, subsidiaries, affiliates, and distributors harmless against all claims, costs, damages, and expenses, and reasonable attorney fees arising out of, directly or indirectly, any claim of personal injury or death associated with such unintended or unauthorized use, even if such claim alleges that ERP was negligent regarding the design or manufacture of the part. ERP is an Equal Opportunity/Affirmative Action Employer. This literature is subject to all applicable copyright laws and is not for resale in any manner.

Downloaded from Arrow.com.