NMC-A Series
Surface Mount Automotive Grade Ceramic Chip Capacitors

AEC-Q200 QUALIFIED

ROHS/REACH COMPLIANT HALOGEN FREE

NIC COMPONENTS
Performance Passives By Design

FEATURES
- MANUFACTURED AT ISO/TS 16949 PRODUCTION FACILITY
- AEC-Q200 QUALIFIED
- SURFACE MOUNT CASE SIZES 0201, 0402, 0603, 0805, 1206, 1210 & 1812
- AVAILABLE IN NPO & X7R DIELECTRICS
- VOLTAGE RATINGS TO 1000VDC

SPECIFICATIONS

Type	NPO	X7R
Capacitance Range	0.1pF ~ 0.039µF	100pF ~ 10µF
Capacitance Tolerance	≤5.0pF: A* (±0.05pF), B (±0.1pF), C (±0.25pF) >5.0pF<10pF: B (±0.1pF), C (±0.25pF), D (±0.5pF) ≥10pF: F (±1%), G (±2%), J (±5%)	J (±5%), ±10% (K), ±20% (M)
Operating Temperature Range	-55°C ~ +125°C	-55°C ~ +125°C
Temperature Characteristics	0±30 ppm/°C	±15%
Rated Voltages (VDC)	6.3V, 10V, 16V, 25V, 50V, 100V, 200V, 250V, 500V, 630V & 1000V	
Q Factor (Q) Dissipaton Factor (DF)	Cap. ≥30pF: Q = 1,000 min. Cap. <30pF: Q = 400 +20xC (See Values & Specificaitons Tables)	DF Max. (See Values & Specificaitons Tables)
Insulation Resistance @ 25°C @ ≤ Rated Voltage for 60 Sec.	10,000MΩ or 500MΩ • µF Whichever is less	<100V 10,000MΩ or 500MΩ • µF whichever is less ≥100V 10,000MΩ or 100MΩ • µF whichever is less
Dielectric Withstanding Voltage	See Values & Specificaitons Tables	
Test Conditions	≤1000pF (1MHz±10%), 1.0Vrms ± 0.2Vrms >1000pF (1KHz ±10%), 1.0Vrms ± 0.2Vrms	1KHz, 1.0V ±0.2Vrms

* The A tolerance (±0.05pF) is not available on the 0.1pF capacitance value parts.
Note: Reflow soldering allowed for all case sizes. Contact NIC for wave soldering restrictions.

PART NUMBER SYSTEM

NMC-A 0603 X7R 103 K 50 C Q Y F

- F — RoHS Compliant
- Y — "Y" denotes suitable for automotive equipment, sourced to special production and inspection at IATF-16949 certified production site
- Q — Q = AEC-Q200 qualification
- C — Packaging: T max. ≤1.0mm C = 7" punched, D = 13" punched; T max. >1.0mm E = 7" plastic, F = 13" plastic
- 50 — Voltage (Vdc) For 1,000VDC use 1KV
- K — Capacitance Tolerance Code (see chart)
- 103 — Capacitance Code, expressed in pF, first 2 digits are significant, 3rd digit is no. of zeros, "R" indicates decimal for under 10pF
- X7R — Temperature Characteristic
- 0603 — Size Code (see chart)
- NMC-A — Series

CASE SIZE DIMENSIONS (mm)

EIA Case Size	0201	0402	0603	0805	1206	1210	1812
Length (L)	0.60 ± 0.03	1.0 ± 0.05	1.6 +0.15/-0.10	2.0 ± 0.20	3.2 ± 0.30	3.2±0.40	4.5±0.40
Width (W)	0.30 ± 0.03	0.5 ± 0.05	0.8 +0.15/-0.10	1.25 ± 0.20	1.6+0.30/-0.20	2.5±0.30	3.2±0.40
Thickness max. (T)	See Part Number and Specifications Tables						
Termination Width (P)	0.10 ~ 0.20	0.15 ~ 0.30	0.25 ~ 0.65	0.25 ~ 0.75	0.25 ~ 0.80	0.25 ~ 1.00	0.25 ~ 0.75

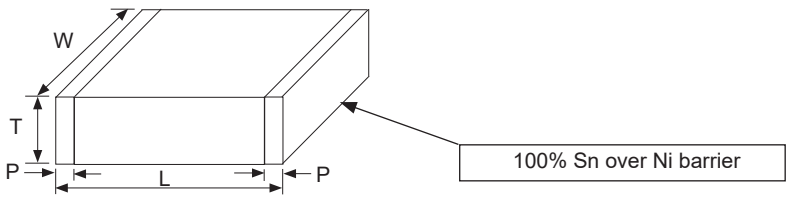

Downloaded from Arrow.com.

Automotive Electronics Council
Component Technical Committee

AEC-Q200 - STRESS TEST QUALIFICATION FOR PASSIVE COMPONENTS

GRADE: **1**
TEMPERATURE RANGE: -40°C ~ +125°C
PASSIVE COMPONENT TYPE: Capacitors, Ceramic Type (MLCCs)

ITEM	TEST	TEST CONDITIONS
1	Electrical Test	25°C
2	High Temperature Exposure	150°C, 1,000Hr
3	Temperature Cycling	Min temp. → 25°C → Max temp., 1,000 cycle
4	Destructive Physical Analysis	Electrical Test not required
5	Moisture Resistance	25~65°C, 90%RH, 10 cycle
6-1	Biased Humidity	85°C, 85%RH, Vr, 1,000Hr
6-2	Low Biased Humidity	85°C, 85%RH, 1.3~1.5V, 1,000Hr
7	High Temperature Operating Life	Max temp, Vr for 1,000Hr
8	External Visual	All qualification parts submitted
9	Physical Dimensions	Vernier Calipers
10	Mechanical Shock	1,500G, 15.4ft/s, Half Sine, Total 18 times
11	Vibration	10~2,000Hz, 5G's for 20min, Total 36 cycles
12	Resistance to Solder Heat	265°C, 10sec
14	Thermal Shock	Min temp (15min)→Max temp (15min), air to air, 300 cycle
14	ESD	22°C, 2KΩ, Direct Contact Discharge, 0.5~8kV & Air Discharge 12~25kV
15-1	Solderability (Dry heat)	155°C, 4Hr → 245°C, 5 sec
15-2	Solderability (Steam aging)	93°C, 8Hr → 220°C, 10 sec
15-3	Solderability (Dewetting)	93°C, 8Hr → 260°C, 10 sec
16	Electrical Characterization	@25°C, 125°C
17	Board Flex	Deflection Point = 2mm (Class II),3mm (Class I), 1mm/sec, 5 sec
18	Capacitance Temperature Characteristics	25 → -55 → 25 → 125°C
19	Terminal Strength (SMD)	0402 - 2N, 0603 -10N, 0805 and larger - 18N, for 60±1 sec.
20	Beam Load	2.5mm/sec

Downloaded from Arrow.com.

NMC-A Series

Surface Mount Automotive Grade Ceramic Chip Capacitors

AEC-Q200 QUALIFIED

ROHS/REACH COMPLIANT HALOGEN FREE

NIC COMPONENTS
Performance Passives By Design

NPO STANDARD VALUES AND SPECIFICATIONS

EIA Case Size		NPO 0201											
Length (L)		0.60 ± 0.03											
Width (W)		0.30 ± 0.03											
Termination Width(P)		0.15 ± 0.1											
Capacitance Value	Capacitance Code	Working Voltage (VDC)											
		10V			16V			25V			50V		
		DWV	Q	T max. (mm)	DWV	Q	T max. (mm)	DWV	Q	T max. (mm)	DWV	Q	T max. (mm)
0.1pF	0R1	25	402	0.33	40	402	0.33	62.5	402	0.33	125	402	0.33
0.2pF	0R2	25	404	0.33	40	404	0.33	62.5	404	0.33	125	404	0.33
0.3pF	0R3	25	406	0.33	40	406	0.33	62.5	406	0.33	125	406	0.33
0.4pF	0R4	25	408	0.33	40	408	0.33	62.5	408	0.33	125	408	0.33
0.5pF	0R5	25	410	0.33	40	410	0.33	62.5	410	0.33	125	410	0.33
0.6pF	0R6	25	412	0.33	40	412	0.33	62.5	412	0.33	125	412	0.33
0.7pF	0R7	25	414	0.33	40	414	0.33	62.5	414	0.33	125	414	0.33
0.8pF	0R8	25	416	0.33	40	416	0.33	62.5	416	0.33	125	416	0.33
0.9pF	0R9	25	418	0.33	40	418	0.33	62.5	418	0.33	125	418	0.33
1.0pF	1R0	25	420	0.33	40	420	0.33	62.5	420	0.33	125	420	0.33
1.2pF	1R2	25	424	0.33	40	424	0.33	62.5	424	0.33	125	424	0.33
1.5pF	1R5	25	430	0.33	40	430	0.33	62.5	430	0.33	125	430	0.33
1.8pF	1R8	25	436	0.33	40	436	0.33	62.5	436	0.33	125	436	0.33
2.2pF	2R2	25	444	0.33	40	444	0.33	62.5	444	0.33	125	444	0.33
2.7pF	2R7	25	454	0.33	40	454	0.33	62.5	454	0.33	125	454	0.33
3.3pF	3R3	25	466	0.33	40	466	0.33	62.5	466	0.33	125	466	0.33
3.9pF	3R9	25	478	0.33	40	478	0.33	62.5	478	0.33	125	478	0.33
4.7pF	4R7	25	494	0.33	40	494	0.33	62.5	494	0.33	125	494	0.33
5.6pF	5R6	25	512	0.33	40	512	0.33	62.5	512	0.33	125	512	0.33
6.8pF	6R8	25	536	0.33	40	536	0.33	62.5	536	0.33	125	536	0.33
8.2pF	8R2	25	564	0.33	40	564	0.33	62.5	564	0.33	125	564	0.33
10pF	100	25	600	0.33	40	600	0.33	62.5	600	0.33	125	600	0.33
12pF	120	25	640	0.33	40	640	0.33	62.5	640	0.33	125	640	0.33
15pF	150	25	700	0.33	40	700	0.33	62.5	700	0.33	125	700	0.33
18pF	180	25	760	0.33	40	760	0.33	62.5	760	0.33	125	760	0.33
22pF	220	25	840	0.33	40	840	0.33	62.5	840	0.33	125	840	0.33
27pF	270	25	940	0.33	40	940	0.33	62.5	940	0.33	125	940	0.33
33pF	330	25	1000	0.33	40	1000	0.33	62.5	1000	0.33	125	1000	0.33
39pF	390	25	1000	0.33	40	1000	0.33	62.5	1000	0.33	125	1000	0.33
47pF	470	25	1000	0.33	40	1000	0.33	62.5	1000	0.33	125	1000	0.33
56pF	560	25	1000	0.33	40	1000	0.33	62.5	1000	0.33	125	1000	0.33
68pF	680	25	1000	0.33	40	1000	0.33	62.5	1000	0.33	125	1000	0.33
82pF	820	25	1000	0.33	40	1000	0.33	62.5	1000	0.33	125	1000	0.33
100pF	101	25	1000	0.33	40	1000	0.33	62.5	1000	0.33	125	1000	0.33
120pF	121	25	1000	0.33	40	1000	0.33	62.5	1000	0.33	125	1000	0.33

(CONSULT FACTORY FOR CAPACITANCE VALUES NOT LISTED)

Packaging Code: C = 7" Reel or for D = 13" reel

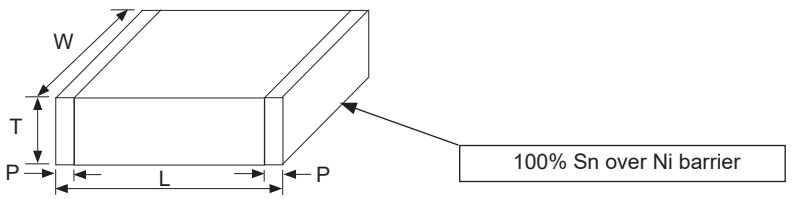

Downloaded from Arrow.com.

NMC-A Series
Surface Mount Automotive Grade Ceramic Chip Capacitors

AEC-Q200 QUALIFIED

ROHS/REACH COMPLIANT HALOGEN FREE

NIC COMPONENTS
Performance Passives By Design

NPO STANDARD VALUES AND SPECIFICATIONS

EIA Case Size		NPO 0402											
Length (L)		1.00 ± 0.05											
Width (W)		0.50 ± 0.05											
Termination Width(P)		0.25 ± 0.1											
Capacitance Value	Capacitance Code	Working Voltage (VDC)											
		10V			16V			25V			50V		
		DWV	Q	T max. (mm)	DWV	Q	T max. (mm)	DWV	Q	T max. (mm)	DWV	Q	T max. (mm)
0.1pF	0R1	25	402	0.55	40	402	0.55	62.5	402	0.55	125	402	0.55
0.2pF	0R2	25	404	0.55	40	404	0.55	62.5	404	0.55	125	404	0.55
0.3pF	0R3	25	406	0.55	40	406	0.55	62.5	406	0.55	125	406	0.55
0.4pF	0R4	25	408	0.55	40	408	0.55	62.5	408	0.55	125	408	0.55
0.47pF	R47										125	409	0.55
0.5pF	0R5	25	410	0.55	40	410	0.55	62.5	410	0.55	125	410	0.55
0.56pF	R56										125	411	0.55
0.6pF	0R6	25	412	0.55	40	412	0.55	62.5	412	0.55	125	412	0.55
0.68pF	R68										125	414	0.55
0.7pF	0R7	25	414	0.55	40	414	0.55	62.5	414	0.55	125	414	0.55
0.8pF	0R8	25	416	0.55	40	416	0.55	62.5	416	0.55	125	416	0.55
0.82pF	R82										125	416	0.55
0.9pF	0R9	25	418	0.55	40	418	0.55	62.5	418	0.55	125	418	0.55
1.0pF	1R0	25	420	0.55	40	420	0.55	62.5	420	0.55	125	420	0.55
1.2pF	1R2	25	424	0.55	40	424	0.55	62.5	424	0.55	125	424	0.55
1.5pF	1R5	25	430	0.55	40	430	0.55	62.5	430	0.55	125	430	0.55
1.8pF	1R8	25	436	0.55	40	436	0.55	62.5	436	0.55	125	436	0.55
2.2pF	2R2	25	444	0.55	40	444	0.55	62.5	444	0.55	125	444	0.55
2.7pF	2R7	25	454	0.55	40	454	0.55	62.5	454	0.55	125	454	0.55
3.3pF	3R3	25	466	0.55	40	466	0.55	62.5	466	0.55	125	466	0.55
3.9pF	3R9	25	478	0.55	40	478	0.55	62.5	478	0.55	125	478	0.55
4.7pF	4R7	25	494	0.55	40	494	0.55	62.5	494	0.55	125	494	0.55
5.6pF	5R6	25	512	0.55	40	512	0.55	62.5	512	0.55	125	512	0.55
6.8pF	6R8	25	536	0.55	40	536	0.55	62.5	536	0.55	125	536	0.55
8.2pF	8R2	25	564	0.55	40	564	0.55	62.5	564	0.55	125	564	0.55
10pF	100	25	600	0.55	40	600	0.55	62.5	600	0.55	125	600	0.55
12pF	120	25	640	0.55	40	640	0.55	62.5	640	0.55	125	640	0.55
15pF	150	25	700	0.55	40	700	0.55	62.5	700	0.55	125	700	0.55
18pF	180	25	760	0.55	40	760	0.55	62.5	760	0.55	125	760	0.55
22pF	220	25	840	0.55	40	840	0.55	62.5	840	0.55	125	840	0.55
27pF	270	25	940	0.55	40	940	0.55	62.5	940	0.55	125	940	0.55
33pF	330	25	1000	0.55	40	1000	0.55	62.5	1000	0.55	125	1000	0.55
39pF	390	25	1000	0.55	40	1000	0.55	62.5	1000	0.55	125	1000	0.55
47pF	470	25	1000	0.55	40	1000	0.55	62.5	1000	0.55	125	1000	0.55
56pF	560	25	1000	0.55	40	1000	0.55	62.5	1000	0.55	125	1000	0.55
68pF	680	25	1000	0.55	40	1000	0.55	62.5	1000	0.55	125	1000	0.55
82pF	820	25	1000	0.55	40	1000	0.55	62.5	1000	0.55	125	1000	0.55
100pF	101	25	1000	0.55	40	1000	0.55	62.5	1000	0.55	125	1000	0.55
120pF	121	25	1000	0.55	40	1000	0.55	62.5	1000	0.55	125	1000	0.55
150pF	151	25	1000	0.55	40	1000	0.55	62.5	1000	0.55	125	1000	0.55
180pF	181	25	1000	0.55	40	1000	0.55	62.5	1000	0.55	125	1000	0.55
220pF	221	25	1000	0.55	40	1000	0.55	62.5	1000	0.55	125	1000	0.55
270pF	271	25	1000	0.55	40	1000	0.55	62.5	1000	0.55	125	1000	0.55
330pF	331	25	1000	0.55	40	1000	0.55	62.5	1000	0.55	125	1000	0.55
390pF	391	25	1000	0.55	40	1000	0.55	62.5	1000	0.55	125	1000	0.55
470pF	471	25	1000	0.55	40	1000	0.55	62.5	1000	0.55	125	1000	0.55
560pF	561	25	1000	0.55	40	1000	0.55	62.5	1000	0.55	125	1000	0.55
680pF	681	25	1000	0.55	40	1000	0.55	62.5	1000	0.55	125	1000	0.55
820pF	821	25	1000	0.55	40	1000	0.55	62.5	1000	0.55	125	1000	0.55
1,000pF	102	25	1000	0.55	40	1000	0.55	62.5	1000	0.55	125	1000	0.55

Packaging Code: C = 7" Reel or for D = 13" reel

Downloaded from Arrow.com.

NMC-A Series
Surface Mount Automotive Grade Ceramic Chip Capacitors

AEC-Q200 QUALIFIED

ROHS/REACH COMPLIANT HALOGEN FREE

NIC COMPONENTS
Performance Passives By Design

NPO STANDARD VALUES AND SPECIFICATIONS

EIA Case Size		NPO 0603 (Continued on next page)											
Length (L)		1.60 ± 0.15											
Width (W)		0.80 ± 0.15											
Termination Width(P)		0.40 ± 0.15											
Capacitance Value	Capacitance Code	Working Voltage (VDC)											
		10V			16V			25V			50V		
		DWV	Q	T max. (mm)	DWV	Q	T max. (mm)	DWV	Q	T max. (mm)	DWV	Q	T max. (mm)
0.47pF	R47										125	409	0.90
0.5pF	0R5	25	410	0.90	40	410	0.90	62.5	410	0.90	125	410	0.90
0.56pF	R56										125	411	0.90
0.6pF	0R6	25	412	0.90	40	412	0.90	62.5	412	0.90	125	412	0.90
0.68pF	R68										125	414	0.90
0.7pF	0R7	25	414	0.90	40	414	0.90	62.5	414	0.90	125	414	0.90
0.8pF	0R8	25	416	0.90	40	416	0.90	62.5	416	0.90	125	416	0.90
0.82pF	R82										125	416	0.90
0.9pF	0R9	25	418	0.90	40	418	0.90	62.5	418	0.90	125	418	0.90
1.0pF	1R0	25	420	0.90	40	420	0.90	62.5	420	0.90	125	420	0.90
1.2pF	1R2	25	424	0.90	40	424	0.90	62.5	424	0.90	125	424	0.90
1.5pF	1R5	25	430	0.90	40	430	0.90	62.5	430	0.90	125	430	0.90
1.8pF	1R8	25	436	0.90	40	436	0.90	62.5	436	0.90	125	436	0.90
2.2pF	2R2	25	444	0.90	40	444	0.90	62.5	444	0.90	125	444	0.90
2.7pF	2R7	25	454	0.90	40	454	0.90	62.5	454	0.90	125	454	0.90
3.3pF	3R3	25	466	0.90	40	466	0.90	62.5	466	0.90	125	466	0.90
3.9pF	3R9	25	478	0.90	40	478	0.90	62.5	478	0.90	125	478	0.90
4.7pF	4R7	25	494	0.90	40	494	0.90	62.5	494	0.90	125	494	0.90
5.6pF	5R6	25	512	0.90	40	512	0.90	62.5	512	0.90	125	512	0.90
6.8pF	6R8	25	536	0.90	40	536	0.90	62.5	536	0.90	125	536	0.90
8.2pF	8R2	25	564	0.90	40	564	0.90	62.5	564	0.90	125	564	0.90
10pF	100	25	600	0.90	40	600	0.90	62.5	600	0.90	125	600	0.90
12pF	120	25	640	0.90	40	640	0.90	62.5	640	0.90	125	640	0.90
15pF	150	25	700	0.90	40	700	0.90	62.5	700	0.90	125	700	0.90
18pF	180	25	760	0.90	40	760	0.90	62.5	760	0.90	125	760	0.90
22pF	220	25	840	0.90	40	840	0.90	62.5	840	0.90	125	840	0.90
27pF	270	25	940	0.90	40	940	0.90	62.5	940	0.90	125	940	0.90
33pF	330	25	1000	0.90	40	1000	0.90	62.5	1000	0.90	125	1000	0.90
39pF	390	25	1000	0.90	40	1000	0.90	62.5	1000	0.90	125	1000	0.90
47pF	470	25	1000	0.90	40	1000	0.90	62.5	1000	0.90	125	1000	0.90
56pF	560	25	1000	0.90	40	1000	0.90	62.5	1000	0.90	125	1000	0.90
68pF	680	25	1000	0.90	40	1000	0.90	62.5	1000	0.90	125	1000	0.90
82pF	820	25	1000	0.90	40	1000	0.90	62.5	1000	0.90	125	1000	0.90
100pF	101	25	1000	0.90	40	1000	0.90	62.5	1000	0.90	125	1000	0.90
120pF	121	25	1000	0.90	40	1000	0.90	62.5	1000	0.90	125	1000	0.90
150pF	151	25	1000	0.90	40	1000	0.90	62.5	1000	0.90	125	1000	0.90
180pF	181	25	1000	0.90	40	1000	0.90	62.5	1000	0.90	125	1000	0.90
220pF	221	25	1000	0.90	40	1000	0.90	62.5	1000	0.90	125	1000	0.90
270pF	271	25	1000	0.90	40	1000	0.90	62.5	1000	0.90	125	1000	0.90
330pF	331	25	1000	0.90	40	1000	0.90	62.5	1000	0.90	125	1000	0.90
390pF	391	25	1000	0.90	40	1000	0.90	62.5	1000	0.90	125	1000	0.90
470pF	471	25	1000	0.90	40	1000	0.90	62.5	1000	0.90	125	1000	0.90
560pF	561	25	1000	0.90	40	1000	0.90	62.5	1000	0.90	125	1000	0.90
680pF	681	25	1000	0.90	40	1000	0.90	62.5	1000	0.90	125	1000	0.90
820pF	821	25	1000	0.90	40	1000	0.90	62.5	1000	0.90	125	1000	0.90
1,000pF	102	25	1000	0.90	40	1000	0.90	62.5	1000	0.90	125	1000	0.90
1,200pF	122	25	1000	0.95	40	1000	0.95	62.5	1000	0.95	125	1000	0.95
1,500pF	152	25	1000	0.95	40	1000	0.95	62.5	1000	0.95	125	1000	0.95
1,800pF	182	25	1000	0.95	40	1000	0.95	62.5	1000	0.95	125	1000	0.95
2,200pF	222	25	1000	0.95	40	1000	0.95	62.5	1000	0.95	125	1000	0.95
2,700pF	272	25	1000	0.95	40	1000	0.95	62.5	1000	0.95	125	1000	0.95
3,300pF	332	25	1000	0.95	40	1000	0.95	62.5	1000	0.95	125	1000	0.95

Packaging Code: C = 7" Reel or for D = 13" reel

Downloaded from Arrow.com.

NMC-A Series
Surface Mount Automotive Grade Ceramic Chip Capacitors

AEC-Q200 QUALIFIED

ROHS/REACH COMPLIANT HALOGEN FREE

NIC COMPONENTS
Performance Passives By Design

NPO STANDARD VALUES AND SPECIFICATIONS

EIA Case Size		NPO 0603								
Length (L)		1.60 ± 0.15								
Width (W)		0.80 ± 0.15								
Termination Width P)		0.40 ± 0.15								
Capacitance Value	Capacitance Code	Working Voltage (VDC)								
		100V			200V			250V		
		DWV	Q	T max. (mm)	DWV	Q	T max. (mm)	DWV	Q	T max. (mm)
0.47pF	R47	250	410	0.90				425	409	0.90
0.5pF	0R5	250	410	0.90	400	410	0.90	425	410	0.90
0.56pF	R56	250	410	0.90				425	411	0.90
0.6pF	0R6	250	412	0.90	400	412	0.90	425	412	0.90
0.68pF	R68	250	412	0.90				425	414	0.90
0.7pF	0R7	250	414	0.90	400	414	0.90	425	414	0.90
0.8pF	0R8	250	416	0.90	400	416	0.90	425	416	0.90
0.82pF	R82	250	416	0.90				425	416	0.90
0.9pF	0R9	250	418	0.90	400	418	0.90	425	418	0.90
1.0pF	1R0	250	420	0.90	400	420	0.90	425	420	0.90
1.2pF	1R2	250	424	0.90	400	424	0.90	425	424	0.90
1.5pF	1R5	250	430	0.90	400	430	0.90	425	430	0.90
1.8pF	1R8	250	436	0.90	400	436	0.90	425	436	0.90
2.2pF	2R2	250	444	0.90	400	444	0.90	425	444	0.90
2.7pF	2R7	250	454	0.90	400	454	0.90	425	454	0.90
3.3pF	3R3	250	466	0.90	400	466	0.90	425	466	0.90
3.9pF	3R9	250	478	0.90	400	478	0.90	425	478	0.90
4.7pF	4R7	250	494	0.90	400	494	0.90	425	494	0.90
5.6pF	5R6	250	512	0.90	400	512	0.90	425	512	0.90
6.8pF	6R8	250	536	0.90	400	536	0.90	425	536	0.90
8.2pF	8R2	250	564	0.90	400	564	0.90	425	564	0.90
10pF	100	250	600	0.90	400	600	0.90	425	600	0.90
12pF	120	250	640	0.90	400	640	0.90	425	640	0.90
15pF	150	250	700	0.90	400	700	0.90	425	700	0.90
18pF	180	250	760	0.90	400	760	0.90	425	760	0.90
22pF	220	250	840	0.90	400	840	0.90	425	840	0.90
27pF	270	250	940	0.90	400	940	0.90	425	940	0.90
33pF	330	250	1000	0.90	400	1000	0.90	425	1000	0.90
39pF	390	250	1000	0.90	400	1000	0.90	425	1000	0.90
47pF	470	250	1000	0.90	400	1000	0.90	425	1000	0.90
56pF	560	250	1000	0.90	400	1000	0.90	425	1000	0.90
68pF	680	250	1000	0.90	400	1000	0.90	425	1000	0.90
82pF	820	250	1000	0.90	400	1000	0.90	425	1000	0.90
100pF	101	250	1000	0.90	400	1000	0.90	425	1000	0.90
120pF	121	250	1000	0.90	500	1000	0.90	425	1000	0.90
150pF	151	250	1000	0.90	500	1000	0.90	425	1000	0.90
180pF	181	250	1000	0.90	500	1000	0.90	425	1000	0.90
220pF	221	250	1000	0.90	500	1000	0.90	425	1000	0.90
270pF	271	250	1000	0.90	500	1000	0.95	425	1000	0.90
330pF	331	250	1000	0.90	500	1000	0.95	425	1000	0.95
390pF	391	250	1000	0.90	500	1000	0.95	425	1000	0.95
470pF	471	250	1000	0.90	500	1000	0.95	425	1000	0.95
560pF	561	250	1000	0.90				425	1000	0.95
680pF	681	250	1000	0.90				425	1000	0.95
820pF	821	250	1000	0.90						
1,000pF	102	250	1000	0.90						

Packaging Code: C = 7" Reel or for D = 13" reel

Downloaded from Arrow.com.

NMC-A Series
Surface Mount Automotive Grade Ceramic Chip Capacitors

AEC-Q200 QUALIFIED

ROHS/REACH COMPLIANT HALOGEN FREE

NIC COMPONENTS
Performance Passives By Design

NPO STANDARD VALUES AND SPECIFICATIONS

EIA Case Size		NPO 0805 (Continued on next page)											
Length (L)		2.00 ± 0.20											
Width (W)		1.25 ± 0.20											
Termination Width (P)		0.50 ± 0.20											
Capacitance Value	Capacitance Code	Working Voltage (VDC)											
		10V			16V			25V			50V		
		DWV	Q	T max. (mm)	DWV	Q	T max. (mm)	DWV	Q	T max. (mm)	DWV	Q	T max. (mm)
0.47pF	R47										125	409	0.7
0.5pF	0R5	25	410	0.7	40	410	0.7	62.5	410	0.7	125	410	0.7
0.56pF	R56										125	411	0.7
0.6pF	0R6	25	412	0.7	40	412	0.7	62.5	412	0.7	125	412	0.7
0.68pF	R68										125	414	0.7
0.7pF	0R7	25	414	0.7	40	414	0.7	62.5	414	0.7	125	414	0.7
0.8pF	0R8	25	416	0.7	40	416	0.7	62.5	416	0.7	125	416	0.7
0.82pF	R82										125	416	0.7
0.9pF	0R9	25	418	0.7	40	418	0.7	62.5	418	0.7	125	418	0.7
1.0pF	1R0	25	420	0.7	40	420	0.7	62.5	420	0.7	125	420	0.7
1.2pF	1R2	25	424	0.7	40	424	0.7	62.5	424	0.7	125	424	0.7
1.5pF	1R5	25	430	0.7	40	430	0.7	62.5	430	0.7	125	430	0.7
1.8pF	1R8	25	436	0.7	40	436	0.7	62.5	436	0.7	125	436	0.7
2.2pF	2R2	25	444	0.7	40	444	0.7	62.5	444	0.7	125	444	0.7
2.7pF	2R7	25	454	0.7	40	454	0.7	62.5	454	0.7	125	454	0.7
3.3pF	3R3	25	466	0.7	40	466	0.7	62.5	466	0.7	125	466	0.7
3.9pF	3R9	25	478	0.7	40	478	0.7	62.5	478	0.7	125	478	0.7
4.7pF	4R7	25	494	0.7	40	494	0.7	62.5	494	0.7	125	494	0.7
5.6pF	5R6	25	512	0.7	40	512	0.7	62.5	512	0.7	125	512	0.7
6.8pF	6R8	25	536	0.7	40	536	0.7	62.5	536	0.7	125	536	0.7
8.2pF	8R2	25	564	0.7	40	564	0.7	62.5	564	0.7	125	564	0.7
10pF	100	25	600	0.7	40	600	0.7	62.5	600	0.7	125	600	0.7
12pF	120	25	640	0.7	40	640	0.7	62.5	640	0.7	125	640	0.7
15pF	150	25	700	0.7	40	700	0.7	62.5	700	0.7	125	700	0.7
18pF	180	25	760	0.7	40	760	0.7	62.5	760	0.7	125	760	0.7
22pF	220	25	840	0.7	40	840	0.7	62.5	840	0.7	125	840	0.7
27pF	270	25	940	0.7	40	940	0.7	62.5	940	0.7	125	940	0.7
33pF	330	25	1000	0.7	40	1000	0.7	62.5	1000	0.7	125	1000	0.7
39pF	390	25	1000	0.7	40	1000	0.7	62.5	1000	0.7	125	1000	0.7
47pF	470	25	1000	0.7	40	1000	0.7	62.5	1000	0.7	125	1000	0.7
56pF	560	25	1000	0.7	40	1000	0.7	62.5	1000	0.7	125	1000	0.7
68pF	680	25	1000	0.7	40	1000	0.7	62.5	1000	0.7	125	1000	0.7
82pF	820	25	1000	0.7	40	1000	0.7	62.5	1000	0.7	125	1000	0.7
100pF	101	25	1000	0.7	40	1000	0.7	62.5	1000	0.7	125	1000	0.7
120pF	121	25	1000	0.7	40	1000	0.7	62.5	1000	0.7	125	1000	0.7
150pF	151	25	1000	0.7	40	1000	0.7	62.5	1000	0.7	125	1000	0.7
180pF	181	25	1000	0.7	40	1000	0.7	62.5	1000	0.7	125	1000	0.7
220pF	221	25	1000	0.7	40	1000	0.7	62.5	1000	0.7	125	1000	0.7
270pF	271	25	1000	0.7	40	1000	0.7	62.5	1000	0.7	125	1000	0.7
330pF	331	25	1000	0.7	40	1000	0.7	62.5	1000	0.7	125	1000	0.7
390pF	391	25	1000	0.95	40	1000	0.95	62.5	1000	0.95	125	1000	0.95
470pF	471	25	1000	0.95	40	1000	0.95	62.5	1000	0.95	125	1000	0.95
560pF	561	25	1000	0.95	40	1000	0.95	62.5	1000	0.95	125	1000	0.95
680pF	681	25	1000	0.95	40	1000	0.95	62.5	1000	0.95	125	1000	0.95
820pF	821	25	1000	0.95	40	1000	0.95	62.5	1000	0.95	125	1000	0.95
1,000pF	102	25	1000	0.95	40	1000	0.95	62.5	1000	0.95	125	1000	0.95

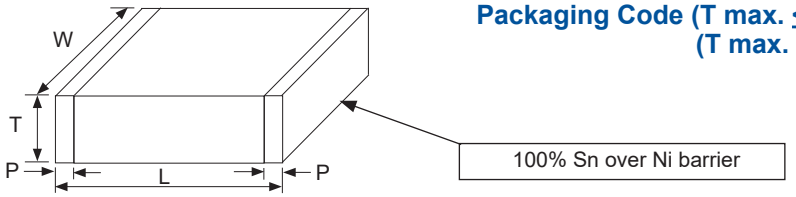

Packaging Code (T max. ≤1.0mm): C = 7" Reel or for D = 13" reel
(T max. >1.0mm): E = 7" Reel or for F = 13" reel

Downloaded from Arrow.com.

NMC-A Series
Surface Mount Automotive Grade Ceramic Chip Capacitors

AEC-Q200 QUALIFIED

ROHS/REACH COMPLIANT HALOGEN FREE

NIC COMPONENTS
Performance Passives By Design

NPO STANDARD VALUES AND SPECIFICATIONS

EIA Case Size		NPO 0805 (Continued on next page)											
Length (L)		2.00 ± 0.20											
Width (W)		1.25 ± 0.20											
Termination Width (P)		0.50 ± 0.20											
Capacitance Value	Capacitance Code	Working Voltage (VDC)											
		10V			16V			25V			50V		
		DWV	Q	T max. (mm)	DWV	Q	T max. (mm)	DWV	Q	T max. (mm)	DWV	Q	T max. (mm)
1,200pF	122	25	1000	0.95	40	1000	0.95	62.5	1000	0.95	125	1000	0.95
1,500pF	152	25	1000	0.95	40	1000	0.95	62.5	1000	0.95	125	1000	0.95
1,800pF	182	25	1000	0.95	40	1000	0.95	62.5	1000	0.95	125	1000	0.95
2,200pF	222	25	1000	0.95	40	1000	0.95	62.5	1000	0.95	125	1000	1.45
2,700pF	272	25	1000	1.35	40	1000	1.35	62.5	1000	1.35	125	1000	1.45
3,300pF	332	25	1000	1.35	40	1000	1.35	62.5	1000	1.35	125	1000	1.45
3,900pF	392	25	1000	1.35	40	1000	1.35	62.5	1000	1.35	125	1000	1.45
4,700pF	472	25	1000	1.35	40	1000	1.35	62.5	1000	1.35	125	1000	1.45
5,600pF	562	25	1000	1.35	40	1000	1.35	62.5	1000	1.35	125	1000	1.45
6,800pF	682	25	1000	1.45	40	1000	1.45	62.5	1000	1.45	125	1000	1.45
8,200pF	822	25	1000	1.45	40	1000	1.45	62.5	1000	1.45	125	1000	1.45
10,000pF	103	25	1000	1.45	40	1000	1.45	62.5	1000	1.45	125	1000	1.45

(CONSULT FACTORY FOR CAPACITANCE VALUES NOT LISTED)

Packaging Code (T max. ≤1.0mm): C = 7" Reel or for D = 13" reel
(T max. >1.0mm): E = 7" Reel or for F = 13" reel

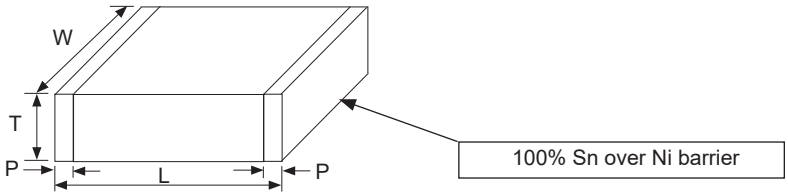

Downloaded from Arrow.com.

NMC-A Series
Surface Mount Automotive Grade Ceramic Chip Capacitors

AEC-Q200 QUALIFIED

ROHS/REACH COMPLIANT HALOGEN FREE

NIC COMPONENTS
Performance Passives By Design

NPO STANDARD VALUES AND SPECIFICATIONS

EIA Case Size		NPO 0805								
Length (L)		2.00 ± 0.20								
Width (W)		1.25 ± 0.20								
Termination Width(P)		0.50 ± 0.20								
Capacitance Value	Capacitance Code	Working Voltage (VDC)								
		100V			200V			250V		
		DWV	Q	T max. (mm)	DWV	Q	T max. (mm)	DWV	Q	T max. (mm)
0.47pF	R47	250	409	0.7				425	409	0.7
0.5pF	0R5	250	410	0.7	400	410	0.7	425	410	0.7
0.56pF	R56	250	411	0.7				425	411	0.7
0.6pF	0R6	250	412	0.7	400	412	0.7	425	412	0.7
0.68pF	R68	250	414	0.7				425	414	0.7
0.7pF	0R7	250	414	0.7	400	414	0.7	425	414	0.7
0.8pF	0R8	250	416	0.7	400	416	0.7	425	416	0.7
0.82pF	R82	250	416	0.7				425	416	0.7
0.9pF	0R9	250	418	0.7	400	418	0.7	425	418	0.7
1.0pF	1R0	250	420	0.7	400	420	0.7	425	420	0.7
1.2pF	1R2	250	424	0.7	400	424	0.7	425	424	0.7
1.5pF	1R5	250	430	0.7	400	430	0.7	425	430	0.7
1.8pF	1R8	250	436	0.7	400	436	0.7	425	436	0.7
2.2pF	2R2	250	444	0.7	400	444	0.7	425	444	0.7
2.7pF	2R7	250	454	0.7	400	454	0.7	425	454	0.7
3.3pF	3R3	250	466	0.7	400	466	0.7	425	466	0.7
3.9pF	3R9	250	478	0.7	400	478	0.7	425	478	0.7
4.7pF	4R7	250	494	0.7	400	494	0.7	425	494	0.7
5.6pF	5R6	250	512	0.7	400	512	0.7	425	512	0.7
6.8pF	6R8	250	536	0.7	400	536	0.7	425	536	0.7
8.2pF	8R2	250	564	0.7	400	564	0.7	425	564	0.7
10pF	100	250	600	0.7	400	600	0.7	425	600	0.7
12pF	120	250	640	0.7	400	640	0.7	425	640	0.7
15pF	150	250	700	0.7	400	700	0.7	425	700	0.7
18pF	180	250	760	0.7	400	760	0.7	425	760	0.7
22pF	220	250	840	0.7	400	840	0.7	425	840	0.7
27pF	270	250	940	0.7	400	940	0.7	425	940	0.7
33pF	330	250	1000	0.7	400	1000	0.7	425	1000	0.7
39pF	390	250	1000	0.7	400	1000	0.7	425	1000	0.7
47pF	470	250	1000	0.7	400	1000	0.7	425	1000	0.7
56pF	560	250	1000	0.7	400	1000	0.7	425	1000	0.7
68pF	680	250	1000	0.7	400	1000	0.7	425	1000	0.7
82pF	820	250	1000	0.7	400	1000	0.7	425	1000	0.7
100pF	101	250	1000	0.7	400	1000	0.9	425	1000	0.9
120pF	121	250	1000	0.7	400	1000	0.9	425	1000	0.9
150pF	151	250	1000	0.7	400	1000	1.35	425	1000	0.95/1.35
180pF	181	250	1000	0.7	400	1000	1.35	425	1000	0.95/1.35
220pF	221	250	1000	0.7	400	1000	1.35	425	1000	0.95/1.35
270pF	271	250	1000	0.7	400	1000	1.35	425	1000	0.95/1.35
330pF	331	250	1000	0.7	400	1000	1.35	425	1000	0.95/1.35
390pF	391	250	1000	0.9	400	1000	1.35	425	1000	0.95/1.35
470pF	471	250	1000	0.9	400	1000	1.35	425	1000	0.95/1.35
560pF	561	250	1000	0.9	400	1000	1.35	425	1000	0.95/1.35
680pF	681	250	1000	0.9	400	1000	1.35	425	1000	0.95/1.35
820pF	821	250	1000	0.9	400	1000	1.35	425	1000	0.95/1.35
1,000pF	102	250	1000	0.9	400	1000	1.35	425	1000	0.95/1.35

(CONSULT FACTORY FOR CAPACITANCE VALUES NOT LISTED)

Packaging Code (T max. ≤1.0mm): C = 7" Reel or for D = 13" reel
(T max. >1.0mm): E = 7" Reel or for F = 13" reel

Downloaded from Arrow.com.

NMC-A Series
Surface Mount Automotive Grade Ceramic Chip Capacitors

AEC-Q200 QUALIFIED

ROHS/REACH COMPLIANT HALOGEN FREE

NIC COMPONENTS Performance Passives By Design

NPO STANDARD VALUES AND SPECIFICATIONS

EIA Case Size		NPO 0805								
Length (L)		2.00 ± 0.20								
Width (W)		1.25 ± 0.20								
Termination Width(P)		0.50 ± 0.20								
Capacitance Value	Capacitance Code	Working Voltage (VDC)								
		100V			200V			250V		
		DWV	Q	T max. (mm)	DWV	Q	T max. (mm)	DWV	Q	T max. (mm)
1,200pF	122	250	1000	0.9	400	1000	1.35	425	1000	0.95/1.35
1,500pF	152	250	1000	0.9	400	1000	1.35	425	1000	1.35
1,800pF	182	250	1000	0.9	400	1000	1.35	425	1000	1.35
2,200pF	222	250	1000	0.9	400	1000	1.35	425	1000	1.35
2,700pF	272	250	1000	1.45						
3,300pF	332	250	1000	1.45						
3,900pF	392	250	1000	1.45						
4,700pF	472	250	1000	1.45						
5,600pF	562	250	1000	1.45						
6,800pF	682	250	1000	1.45						

(CONSULT FACTORY FOR CAPACITANCE VALUES NOT LISTED)

Packaging Code (T max. ≤1.0mm): C = 7" Reel or for D = 13" reel
(T max. >1.0mm): E = 7" Reel or for F = 13" reel

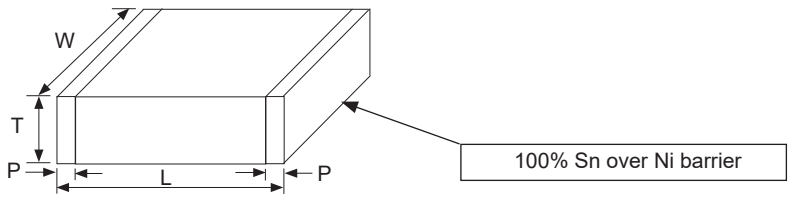

Downloaded from Arrow.com.

NMC-A Series
Surface Mount Automotive Grade Ceramic Chip Capacitors

AEC-Q200 QUALIFIED

ROHS/REACH COMPLIANT HALOGEN FREE

NIC COMPONENTS
Performance Passives By Design

NPO STANDARD VALUES AND SPECIFICATIONS

EIA Case Size		NPO 0805					
Length (L)		2.00 ± 0.20					
Width (W)		1.25 ± 0.20					
Termination Width(P)		0.50 ± 0.20					
Capacitance Value	Capacitance Code	Working Voltage (VDC)					
		500V			630V		
		DWV	Q	T max. (mm)	DWV	Q	T max. (mm)
0.5pF	0R5	650	410	0.7	945	410	0.7
0.6pF	0R6	650	412	0.7	945	412	0.7
0.7pF	0R7	650	414	0.7	945	414	0.7
0.8pF	0R8	650	416	0.7	945	416	0.7
0.9pF	0R9	650	418	0.7	945	418	0.7
1.0pF	1R0	650	420	0.7	945	420	0.7
1.2pF	1R2	650	424	0.7	945	424	0.7
1.5pF	1R5	650	430	0.7	945	430	0.7
1.8pF	1R8	650	436	0.7	945	436	0.7
2.2pF	2R2	650	444	0.7	945	444	0.7
2.7pF	2R7	650	454	0.7	945	454	0.7
3.3pF	3R3	650	466	0.7	945	466	0.7
3.9pF	3R9	650	478	0.7	945	478	0.7
4.7pF	4R7	650	494	0.7	945	494	0.7
5.6pF	5R6	650	512	0.7	945	512	0.7
6.8pF	6R8	650	536	0.7	945	536	0.7
8.2pF	8R2	650	564	0.7	945	564	0.7
10pF	100	650	600	0.7	945	600	0.7
12pF	120	650	640	0.7	945	640	0.7
15pF	150	650	700	0.7	945	700	0.7
18pF	180	650	760	0.7	945	760	0.7
22pF	220	650	840	0.7	945	840	0.7
27pF	270	650	940	0.7	945	940	0.7
33pF	330	650	1000	0.7	945	1000	0.7
39pF	390	650	1000	0.7	945	1000	0.7
47pF	470	650	1000	0.7	945	1000	0.7
56pF	560	650	1000	0.7	945	1000	0.7
68pF	680	650	1000	0.7	945	1000	0.7
82pF	820	650	1000	0.9	945	1000	0.9
100pF	101	650	1000	0.9	945	1000	0.9
120pF	121	650	1000	1.35	945	1000	1.35
150pF	151	650	1000	1.35	945	1000	1.35
180pF	181	650	1000	1.35	945	1000	1.35
220pF	221	650	1000	1.35	945	1000	1.35
270pF	271	650	1000	1.35	945	1000	1.35
330pF	331	650	1000	1.35	945	1000	1.35
390pF	391	650	1000	1.35	945	1000	1.35

Packaging Code (T max. ≤1.0mm): C = 7" Reel or for D = 13" reel
(T max. >1.0mm): E = 7" Reel or for F = 13" reel

(CONSULT FACTORY FOR CAPACITANCE VALUES NOT LISTED)

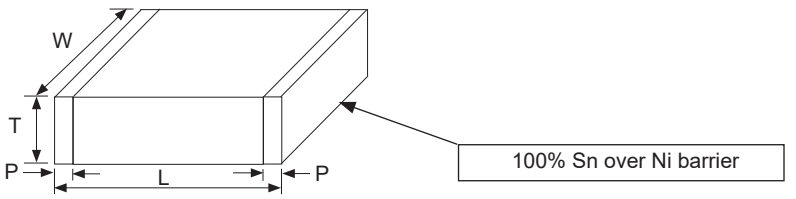

Downloaded from Arrow.com.

NMC-A Series
Surface Mount Automotive Grade Ceramic Chip Capacitors

AEC-Q200 QUALIFIED

ROHS/REACH COMPLIANT HALOGEN FREE

NIC COMPONENTS
Performance Passives By Design

NPO STANDARD VALUES AND SPECIFICATIONS

EIA Case Size		NPO 1206											
Length (L)		3.20 ±0.30											
Width (W)		1.60 ± 0.30											
Termination Width(P)		0.60 ± 0.20											
Capacitance Value	Capacitance Code	Working Voltage (VDC)											
		10V			16V			25V			50V		
		DWV	Q	T max. (mm)	DWV	Q	T max. (mm)	DWV	Q	T max. (mm)	DWV	Q	T max. (mm)
1.2pF	1R2	25	424	0.9	40	424	0.9	62.5	424	0.9	125	424	0.9
1.5pF	1R5	25	430	0.9	40	430	0.9	62.5	430	0.9	125	430	0.9
1.8pF	1R8	25	436	0.9	40	436	0.9	62.5	436	0.9	125	436	0.9
2.2pF	2R2	25	444	0.9	40	444	0.9	62.5	444	0.9	125	444	0.9
2.7pF	2R7	25	454	0.9	40	454	0.9	62.5	454	0.9	125	454	0.9
3.3pF	3R3	25	466	0.9	40	466	0.9	62.5	466	0.9	125	466	0.9
3.9pF	3R9	25	478	0.9	40	478	0.9	62.5	478	0.9	125	478	0.9
4.7pF	4R7	25	494	0.9	40	494	0.9	62.5	494	0.9	125	494	0.9
5.6pF	5R6	25	512	0.9	40	512	0.9	62.5	512	0.9	125	512	0.9
6.8pF	6R8	25	536	0.9	40	536	0.9	62.5	536	0.9	125	536	0.9
8.2pF	8R2	25	564	0.9	40	564	0.9	62.5	564	0.9	125	564	0.9
10pF	100	25	600	0.9	40	600	0.9	62.5	600	0.9	125	600	0.9
12pF	120	25	640	0.9	40	640	0.9	62.5	640	0.9	125	640	0.9
15pF	150	25	700	0.9	40	700	0.9	62.5	700	0.9	125	700	0.9
18pF	180	25	760	0.9	40	760	0.9	62.5	760	0.9	125	760	0.9
22pF	220	25	840	0.9	40	840	0.9	62.5	840	0.9	125	840	0.9
27pF	270	25	940	0.9	40	940	0.9	62.5	940	0.9	125	940	0.9
33pF	330	25	1000	0.9	40	1000	0.9	62.5	1000	0.9	125	1000	0.9
39pF	390	25	1000	0.9	40	1000	0.9	62.5	1000	0.9	125	1000	0.9
47pF	470	25	1000	0.9	40	1000	0.9	62.5	1000	0.9	125	1000	0.9
56pF	560	25	1000	0.9	40	1000	0.9	62.5	1000	0.9	125	1000	0.9
68pF	680	25	1000	0.9	40	1000	0.9	62.5	1000	0.9	125	1000	0.9
82pF	820	25	1000	0.9	40	1000	0.9	62.5	1000	0.9	125	1000	0.9
100pF	101	25	1000	0.9	40	1000	0.9	62.5	1000	0.9	125	1000	0.9
120pF	121	25	1000	0.9	40	1000	0.9	62.5	1000	0.9	125	1000	0.9
150pF	151	25	1000	0.9	40	1000	0.9	62.5	1000	0.9	125	1000	0.9
180pF	181	25	1000	0.9	40	1000	0.9	62.5	1000	0.9	125	1000	0.9
220pF	221	25	1000	0.9	40	1000	0.9	62.5	1000	0.9	125	1000	0.9
270pF	271	25	1000	0.9	40	1000	0.9	62.5	1000	0.9	125	1000	0.9
330pF	331	25	1000	0.9	40	1000	0.9	62.5	1000	0.9	125	1000	0.9
390pF	391	25	1000	0.9	40	1000	0.9	62.5	1000	0.9	125	1000	0.9
470pF	471	25	1000	0.9	40	1000	0.9	62.5	1000	0.9	125	1000	0.9
560pF	561	25	1000	0.9	40	1000	0.9	62.5	1000	0.9	125	1000	0.9
680pF	681	25	1000	0.9	40	1000	0.9	62.5	1000	0.9	125	1000	0.9
820pF	821	25	1000	0.9	40	1000	0.9	62.5	1000	0.9	125	1000	0.9
1,000pF	102	25	1000	0.9	40	1000	0.9	62.5	1000	0.9	125	1000	0.9
1,200pF	122	25	1000	0.9	40	1000	0.9	62.5	1000	0.9	125	1000	0.9
1,500pF	152	25	1000	0.9	40	1000	0.9	62.5	1000	0.9	125	1000	0.9
1,800pF	182	25	1000	0.9	40	1000	0.9	62.5	1000	0.9	125	1000	0.9
2,200pF	222	25	1000	0.9	40	1000	0.9	62.5	1000	0.9	125	1000	0.9
2,700pF	272	25	1000	0.9	40	1000	0.9	62.5	1000	0.9	125	1000	0.9
3,300pF	332	25	1000	0.9	40	1000	0.9	62.5	1000	0.9	125	1000	0.9
3,900pF	392	25	1000	0.9	40	1000	0.9	62.5	1000	0.9	125	1000	0.9
4,700pF	472	25	1000	0.9	40	1000	0.9	62.5	1000	0.9	125	1000	0.9
5,600pF	562	25	1000	0.9	40	1000	0.9	62.5	1000	0.9	125	1000	0.9
6,800pF	682	25	1000	1.05	40	1000	1.05	62.5	1000	1.05	125	1000	1.05
8,200pF	822	25	1000	1.35	40	1000	1.35	62.5	1000	1.35	125	1000	1.35
10,000pF	103	25	1000	1.35	40	1000	1.35	62.5	1000	1.35	125	1000	1.35

Packaging Code (T max. ≤1.0mm): C = 7" Reel or for D = 13" reel
(T max. >1.0mm): E = 7" Reel or for F = 13" reel

Downloaded from Arrow.com.

NMC-A Series
Surface Mount Automotive Grade Ceramic Chip Capacitors

AEC-Q200 QUALIFIED

ROHS/REACH COMPLIANT HALOGEN FREE

NIC COMPONENTS
Performance Passives By Design

NPO STANDARD VALUES AND SPECIFICATIONS

EIA Case Size		NPO 1206 (Continued on next page)								
Length (L)		3.20 ±0.30								
Width (W)		1.60 ± 0.30								
Termination Width(P)		0.60 ± 0.20								
Capacitance Value	Capacitance Code	Working Voltage (VDC)								
		100V			200V			250V		
		DWV	Q	T max. (mm)	DWV	Q	T max. (mm)	DWV	Q	T max. (mm)
1.2pF	1R2	250	424	0.9	400	424	0.9	425	424	0.9
1.5pF	1R5	250	430	0.9	400	430	0.9	425	430	0.9
1.8pF	1R8	250	436	0.9	400	436	0.9	425	436	0.9
2.2pF	2R2	250	444	0.9	400	444	0.9	425	444	0.9
2.7pF	2R7	250	454	0.9	400	454	0.9	425	454	0.9
3.3pF	3R3	250	466	0.9	400	466	0.9	425	466	0.9
3.9pF	3R9	250	478	0.9	400	478	0.9	425	478	0.9
4.7pF	4R7	250	494	0.9	400	494	0.9	425	494	0.9
5.6pF	5R6	250	512	0.9	400	512	0.9	425	512	0.9
6.8pF	6R8	250	536	0.9	400	536	0.9	425	536	0.9
8.2pF	8R2	250	564	0.9	400	564	0.9	425	564	0.9
10pF	100	250	600	0.9	400	600	0.9	425	600	0.9
12pF	120	250	640	0.9	400	640	0.9	425	640	0.9
15pF	150	250	700	0.9	400	700	0.9	425	700	0.9
18pF	180	250	760	0.9	400	760	0.9	425	760	0.9
22pF	220	250	840	0.9	400	840	0.9	425	840	0.9
27pF	270	250	940	0.9	400	940	0.9	425	940	0.9
33pF	330	250	1000	0.9	400	1000	0.9	425	1000	0.9
39pF	390	250	1000	0.9	400	1000	0.9	425	1000	0.9
47pF	470	250	1000	0.9	400	1000	0.9	425	1000	0.9
56pF	560	250	1000	0.9	400	1000	0.9	425	1000	0.9
68pF	680	250	1000	0.9	400	1000	0.9	425	1000	0.9
82pF	820	250	1000	0.9	400	1000	0.9	425	1000	0.9
100pF	101	250	1000	0.9	400	1000	0.9	425	1000	0.9
120pF	121	250	1000	0.9	400	1000	0.9	425	1000	0.9
150pF	151	250	1000	0.9	400	1000	0.9	425	1000	0.9
180pF	181	250	1000	0.9	400	1000	0.9	425	1000	0.9
220pF	221	250	1000	0.9	400	1000	0.9	425	1000	0.9
270pF	271	250	1000	0.9	400	1000	0.9	425	1000	0.70/1.05
330pF	331	250	1000	0.9	400	1000	0.9	425	1000	0.70/1.05
390pF	391	250	1000	0.9	400	1000	0.9	425	1000	0.70/1.05
470pF	471	250	1000	0.9	400	1000	1.05	425	1000	0.70/1.05
560pF	561	250	1000	0.9	400	1000	1.05	425	1000	0.70/1.35
680pF	681	250	1000	0.9	400	1000	1.05	425	1000	0.70/1.35
820pF	821	250	1000	0.9	400	1000	1.05	425	1000	0.95/1.8
1,000pF	102	250	1000	0.9	400	1000	1.05	425	1000	0.95/1.8
1,200pF	122	250	1000	0.9	400	1000	1.05	425	1000	0.95/1.8
1,500pF	152	250	1000	0.9	400	1000	1.35	425	1000	0.95/1.8
1,800pF	182	250	1000	0.9	400	1000	1.35	425	1000	1.8
2,200pF	222	250	1000	0.9	400	1000	1.35	425	1000	1.8
2,700pF	272	250	1000	0.9	400	1000	1.35	425	1000	1.8
3,300pF	332	250	1000	0.9	400	1000	1.35	425	1000	1.8
3,900pF	392	250	1000	0.9	400	1000	1.35	425	1000	1.8
4,700pF	472	250	1000	0.9	400	1000	1.35	425	1000	1.8
5,600pF	562	250	1000	0.9						
6,800pF	682	250	1000	1.05						
8,200pF	822	250	1000	1.35						
10,000pF	103	250	1000	1.35						

Packaging Code (T max. ≤1.0mm): C = 7" Reel or for D = 13" reel
(T max. >1.0mm): E = 7" Reel or for F = 13" reel

Downloaded from Arrow.com.

NMC-A Series
Surface Mount Automotive Grade Ceramic Chip Capacitors

AEC-Q200 QUALIFIED

ROHS/REACH COMPLIANT HALOGEN FREE

NIC COMPONENTS
Performance Passives By Design

NPO STANDARD VALUES AND SPECIFICATIONS

EIA Case Size		NPO 1206					
Length (L)		3.2 ±0.30					
Width (W)		1.60 ± 0.30					
Termination Width(P)		0.60 ± 0.20					
Capacitance Value	Capacitance Code	Working Voltage (VDC)					
		500V			630V		
		DWV	Q	T max. (mm)	DWV	Q	T max. (mm)
1.2pF	1R2	650	424	0.9	945	424	0.9
1.5pF	1R5	650	430	0.9	945	430	0.9
1.8pF	1R8	650	436	0.9	945	436	0.9
2.2pF	2R2	650	444	0.9	945	444	0.9
2.7pF	2R7	650	454	0.9	945	454	0.9
3.3pF	3R3	650	466	0.9	945	466	0.9
3.9pF	3R9	650	478	0.9	945	478	0.9
4.7pF	4R7	650	494	0.9	945	494	0.9
5.6pF	5R6	650	512	0.9	945	512	0.9
6.8pF	6R8	650	536	0.9	945	536	0.9
8.2pF	8R2	650	564	0.9	945	564	0.9
10pF	100	650	600	0.9	945	600	0.9
12pF	120	650	640	0.9	945	640	0.9
15pF	150	650	700	0.9	945	700	0.9
18pF	180	650	760	0.9	945	760	0.9
22pF	220	650	840	0.9	945	840	0.9
27pF	270	650	940	0.9	945	940	0.9
33pF	330	650	1000	0.9	945	1000	0.9
39pF	390	650	1000	0.9	945	1000	0.9
47pF	470	650	1000	0.9	945	1000	0.9
56pF	560	650	1000	0.9	945	1000	0.9
68pF	680	650	1000	0.9	945	1000	0.9
82pF	820	650	1000	0.9	945	1000	0.9
100pF	101	650	1000	0.9	945	1000	0.9
120pF	121	650	1000	0.9	945	1000	0.9
150pF	151	650	1000	0.9	945	1000	0.9
180pF	181	650	1000	0.9	945	1000	0.9
220pF	221	650	1000	0.9	945	1000	0.9/1.25
270pF	271	650	1000	0.9/1.05	945	1000	0.9/1.25
330pF	331	650	1000	0.9/1.05	945	1000	0.9/1.25
390pF	391	650	1000	0.9/1.05	945	1000	0.9/1.25
470pF	471	650	1000	0.9/1.05	945	1000	1.25
560pF	561	650	1000	0.9/1.35	945	1000	1.35
680pF	681	650	1000	0.9/1.35	945	1000	1.45
820pF	821	650	1000	0.95/1.8	945	1000	1.8
1,000pF	102	650	1000	0.95/1.8	945	1000	1.8
1,200pF	122	650	1000	1.8	945	1000	1.8
1,500pF	152	650	1000	1.8	945	1000	1.8
1,800pF	182	650	1000	1.8	945	1000	1.8
2,200pF	222	650	1000	1.8	945	1000	1.8

EIA Case Size		NPO 1210		
Length (L)		3.2 ±0.40		
Width (W)		2.50 ± 0.30		
Termination Width(P)		0.75 ± 0.25		
Capacitance Value	Capacitance Code	Working Voltage (VDC)		
		10V		
		DWV	Q	T max. (mm)
10pF	100	25	600	1.05
12pF	120	25	640	1.05
15pF	150	25	700	1.05
18pF	180	25	760	1.05
22pF	220	25	840	1.05
27pF	270	25	940	1.05
33pF	330	25	1000	1.05
39pF	390	25	1000	1.05
47pF	470	25	1000	1.05
56pF	560	25	1000	1.05
68pF	680	25	1000	1.05
82pF	820	25	1000	1.05
100pF	101	25	1000	1.05
120pF	121	25	1000	1.05
150pF	151	25	1000	1.05
180pF	181	25	1000	1.05
220pF	221	25	1000	1.05
270pF	271	25	1000	1.05
330pF	331	25	1000	1.05
390pF	391	25	1000	1.05
470pF	471	25	1000	1.05
560pF	561	25	1000	1.05
680pF	681	25	1000	1.05
820pF	821	25	1000	1.05
1,000pF	102	25	1000	1.05
1,200pF	122	25	1000	1.05
1,500pF	152	25	1000	1.05
1,800pF	182	25	1000	1.05
2,200pF	222	25	1000	1.05
2,700pF	272	25	1000	1.05
3,300pF	332	25	1000	1.05
3,900pF	392	25	1000	1.05
4,700pF	472	25	1000	1.05
5,600pF	562	25	1000	1.05
6,800pF	682	25	1000	1.05
8,200pF	822	25	1000	1.05
10,000pF	103	25	1000	1.05
0.012µF	123	25	1000	1.35
0.015µF	153	25	1000	1.35
0.018µF	183	25	1000	2.2
0.022µF	223	25	1000	2.2
0.027µF	273	25	1000	2.2
0.033µF	333	25	1000	2.2

(CONSULT FACTORY FOR CAPACITANCE VALUES NOT LISTED)

Packaging Code (T max. ≤1.0mm): C = 7" Reel or for D = 13" reel
(T max. >1.0mm): E = 7" Reel or for F = 13" reel

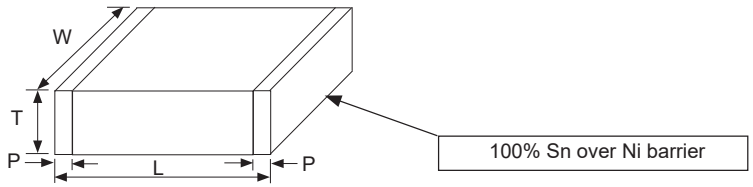

Downloaded from Arrow.com.

NMC-A Series
Surface Mount Automotive Grade Ceramic Chip Capacitors

AEC-Q200 QUALIFIED

ROHS/REACH COMPLIANT HALOGEN FREE

NIC COMPONENTS
Performance Passives By Design

NPO STANDARD VALUES AND SPECIFICATIONS

EIA Case Size		NPO 1210 (Continued on next page)											
Length (L)		3.20 ±0.40											
Width (W)		2.50 ± 0.30											
Termination Width(P)		0.75 ± 0.25											
Capacitance Value	Capacitance Code	Working Voltage (VDC)											
		16V			25V			50V			100V		
		DWV	Q	T max. (mm)	DWV	Q	T max. (mm)	DWV	Q	T max. (mm)	DWV	Q	T max. (mm)
10pF	100	40	600	1.05	62.5	600	1.05	125	600	1.05	250	600	1.05
12pF	120	40	640	1.05	62.5	640	1.05	125	640	1.05	250	640	1.05
15pF	150	40	700	1.05	62.5	700	1.05	125	700	1.05	250	700	1.05
18pF	180	40	760	1.05	62.5	760	1.05	125	760	1.05	250	760	1.05
22pF	220	40	840	1.05	62.5	840	1.05	125	840	1.05	250	840	1.05
27pF	270	40	940	1.05	62.5	940	1.05	125	940	1.05	250	940	1.05
33pF	330	40	1000	1.05	62.5	1000	1.05	125	1000	1.05	250	1000	1.05
39pF	390	40	1000	1.05	62.5	1000	1.05	125	1000	1.05	250	1000	1.05
47pF	470	40	1000	1.05	62.5	1000	1.05	125	1000	1.05	250	1000	1.05
56pF	560	40	1000	1.05	62.5	1000	1.05	125	1000	1.05	250	1000	1.05
68pF	680	40	1000	1.05	62.5	1000	1.05	125	1000	1.05	250	1000	1.05
82pF	820	40	1000	1.05	62.5	1000	1.05	125	1000	1.05	250	1000	1.05
100pF	101	40	1000	1.05	62.5	1000	1.05	125	1000	1.05	250	1000	1.05
120pF	121	40	1000	1.05	62.5	1000	1.05	125	1000	1.05	250	1000	1.05
150pF	151	40	1000	1.05	62.5	1000	1.05	125	1000	1.05	250	1000	1.05
180pF	181	40	1000	1.05	62.5	1000	1.05	125	1000	1.05	250	1000	1.05
220pF	221	40	1000	1.05	62.5	1000	1.05	125	1000	1.05	250	1000	1.05
270pF	271	40	1000	1.05	62.5	1000	1.05	125	1000	1.05	250	1000	1.05
330pF	331	40	1000	1.05	62.5	1000	1.05	125	1000	1.05	250	1000	1.05
390pF	391	40	1000	1.05	62.5	1000	1.05	125	1000	1.05	250	1000	1.05
470pF	471	40	1000	1.05	62.5	1000	1.05	125	1000	1.05	250	1000	1.05
560pF	561	40	1000	1.05	62.5	1000	1.05	125	1000	1.05	250	1000	1.05
680pF	681	40	1000	1.05	62.5	1000	1.05	125	1000	1.05	250	1000	1.05
820pF	821	40	1000	1.05	62.5	1000	1.05	125	1000	1.05	250	1000	1.05
1,000pF	102	40	1000	1.05	62.5	1000	1.05	125	1000	1.45	250	1000	1.45
1,200pF	122	40	1000	1.05	62.5	1000	1.05	125	1000	1.45	250	1000	1.45
1,500pF	152	40	1000	1.05	62.5	1000	1.05	125	1000	1.45	250	1000	1.45
1,800pF	182	40	1000	1.05	62.5	1000	1.05	125	1000	1.45	250	1000	1.45
2,200pF	222	40	1000	1.05	62.5	1000	1.05	125	1000	1.45	250	1000	1.45
2,700pF	272	40	1000	1.05	62.5	1000	1.05	125	1000	1.45	250	1000	1.45
3,300pF	332	40	1000	1.05	62.5	1000	1.05	125	1000	1.05	250	1000	1.05
3,900pF	392	40	1000	1.05	62.5	1000	1.05	125	1000	1.05	250	1000	1.05
4,700pF	472	40	1000	1.05	62.5	1000	1.05	125	1000	1.05	250	1000	1.05
5,600pF	562	40	1000	1.05	62.5	1000	1.05	125	1000	1.05	250	1000	1.05
6,800pF	682	40	1000	1.05	62.5	1000	1.05	125	1000	1.05	250	1000	1.05
8,200pF	822	40	1000	1.05	62.5	1000	1.05	125	1000	1.05	250	1000	1.05
10,000pF	103	40	1000	1.05	62.5	1000	1.05	125	1000	1.05	250	1000	1.05

(CONSULT FACTORY FOR CAPACITANCE VALUES NOT LISTED)

Packaging Code (T max. ≤1.0mm): C = 7" Reel or for D = 13" reel
(T max. >1.0mm): E = 7" Reel or for F = 13" reel

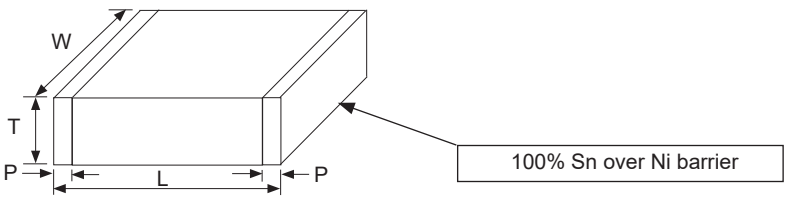

Downloaded from Arrow.com.

NMC-A Series
Surface Mount Automotive Grade Ceramic Chip Capacitors

AEC-Q200 QUALIFIED

ROHS/REACH COMPLIANT HALOGEN FREE

NIC COMPONENTS
Performance Passives By Design

NPO STANDARD VALUES AND SPECIFICATIONS

EIA Case Size		NPO 1210											
Length (L)		3.20 ±0.40											
Width (W)		2.50 ± 0.30											
Termination Width(P)		0.75 ± 0.25											
Capacitance Value	Capacitance Code	Working Voltage (VDC)											
		200V			250V			500V			630V		
		DWV	Q	T max. (mm)	DWV	Q	T max. (mm)	DWV	Q	T max. (mm)	DWV	Q	T max. (mm)
10pF	100	400	600	1.05	425	600	1.05	650	600	1.05	750	600	1.05
12pF	120	400	640	1.05	425	640	1.05	650	640	1.05	750	640	1.05
15pF	150	400	700	1.05	425	700	1.05	650	700	1.05	750	700	1.05
18pF	180	400	760	1.05	425	760	1.05	650	760	1.05	750	760	1.05
22pF	220	400	840	1.05	425	840	1.05	650	840	1.05	750	840	1.05
27pF	270	400	940	1.05	425	940	1.05	650	940	1.05	750	940	1.05
33pF	330	400	1000	1.05	425	1000	1.05	650	1000	1.05	750	1000	1.05
39pF	390	400	1000	1.05	425	1000	1.05	650	1000	1.05	750	1000	1.05
47pF	470	400	1000	1.05	425	1000	1.05	650	1000	1.05	750	1000	1.05
56pF	560	400	1000	1.05	425	1000	1.05	650	1000	1.05	750	1000	1.05
68pF	680	400	1000	1.05	425	1000	1.05	650	1000	1.05	750	1000	1.05
82pF	820	400	1000	1.05	425	1000	1.05	650	1000	1.05	750	1000	1.05
100pF	101	400	1000	1.05	425	1000	1.05	650	1000	1.05	750	1000	1.05
120pF	121	400	1000	1.05	425	1000	1.05	650	1000	1.05	750	1000	1.05
150pF	151	400	1000	1.05	425	1000	1.05	650	1000	1.05	750	1000	1.05
180pF	181	400	1000	1.05	425	1000	1.05	650	1000	1.05	750	1000	1.05
220pF	221	400	1000	1.05	425	1000	1.05	650	1000	1.05	750	1000	1.05
270pF	271	400	1000	1.05	425	1000	1.05	650	1000	1.05	750	1000	1.05
330pF	331	400	1000	1.05	425	1000	1.05	650	1000	1.05	750	1000	1.05
390pF	391	400	1000	1.05	425	1000	1.05	650	1000	1.05	750	1000	1.05
470pF	471	400	1000	1.05	425	1000	1.05	650	1000	1.05	750	1000	1.05
560pF	561	400	1000	1.05	425	1000	1.05	650	1000	1.05	750	1000	1.05
680pF	681	400	1000	1.05	425	1000	1.05	650	1000	1.05	750	1000	1.05
820pF	821	400	1000	1.05	425	1000	1.05	650	1000	1.05	750	1000	1.05
1,000pF	102	400	1000	1.35	425	1000	1.45	650	1000	1.35	750	1000	1.45
1,200pF	122	400	1000	1.35	425	1000	1.45	650	1000	1.35	750	1000	1.45
1,500pF	152	400	1000	1.35	425	1000	1.45	650	1000	1.35	750	1000	1.45
1,800pF	182	400	1000	1.35	425	1000	1.45	650	1000	1.35	750	1000	1.45
2,200pF	222	400	1000	1.35	425	1000	1.45	650	1000	1.35	750	1000	1.35
2,700pF	272	400	1000	1.35	425	1000	1.45	650	1000	1.35	750	1000	1.35
3,300pF	332	400	1000	1.35	425	1000	1.35	650	1000	1.35	750	1000	1.35
3,900pF	392	400	1000	1.35	425	1000	1.35	650	1000	1.35	750	1000	1.35
4,700pF	472	400	1000	1.8	425	1000	1.8						
5,600pF	562												
6,800pF	682												
8,200pF	822												
10,000pF	103												
0.012µF	123												
0.015µF	153												
0.018µF	183												
0.022µF	223												
0.027µF	273												
0.033µF	333												

(CONSULT FACTORY FOR CAPACITANCE VALUES NOT LISTED)

Packaging Code (T max. ≤1.0mm): C = 7" Reel or for D = 13" reel
(T max. >1.0mm): E = 7" Reel or for F = 13" reel

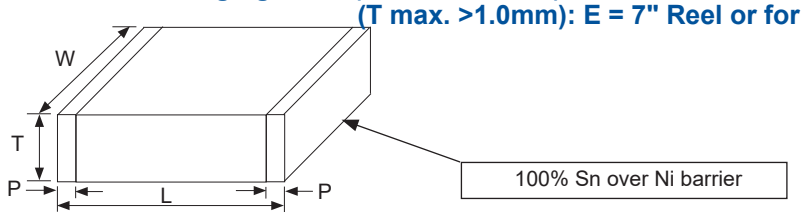

Downloaded from Arrow.com.

NMC-A Series
Surface Mount Automotive Grade Ceramic Chip Capacitors

AEC-Q200 QUALIFIED

ROHS/REACH COMPLIANT HALOGEN FREE

NIC COMPONENTS
Performance Passives By Design

X7R STANDARD VALUES AND SPECIFICATIONS

EIA Case Size		X7R 0201											
Length (L)		1.0 ± 0.05											
Width (W)		0.5 ± 0.05											
Termination Width(P)		0.25 ± 0.1											
Capacitance Value	Capacitance Code	Working Voltage (VDC)											
		10V			16V			25V			50V		
		DWV	DF (%)	T max. (mm)	DWV	DF (%)	T max. (mm)	DWV	DF (%)	T max. (mm)	DWV	DF (%)	T max. (mm)
100pF	101	25	5.0	0.33	40	3.5	0.33	62.5	3.5	0.33	125	3.0	0.33
120pF	121	25	5.0	0.33	40	3.5	0.33	62.5	3.5	0.33	125	3.0	0.33
150pF	151	25	5.0	0.33	40	3.5	0.33	62.5	3.5	0.33	125	3.0	0.33
180pF	181	25	5.0	0.33	40	3.5	0.33	62.5	3.5	0.33	125	3.0	0.33
220pF	221	25	5.0	0.33	40	3.5	0.33	62.5	3.5	0.33	125	3.0	0.33
270pF	271	25	5.0	0.33	40	3.5	0.33	62.5	3.5	0.33	125	3.0	0.33
330pF	331	25	5.0	0.33	40	3.5	0.33	62.5	3.5	0.33	125	3.0	0.33
390pF	391	25	5.0	0.33	40	3.5	0.33	62.5	3.5	0.33	125	3.0	0.33
470pF	471	25	5.0	0.33	40	3.5	0.33	62.5	3.5	0.33	125	3.0	0.33
560pF	561	25	5.0	0.33	40	3.5	0.33	62.5	3.5	0.33	125	3.0	0.33
680pF	681	25	5.0	0.33	40	3.5	0.33	62.5	3.5	0.33	125	3.0	0.33
820pF	821	25	5.0	0.33	40	3.5	0.33	62.5	3.5	0.33	125	3.0	0.33
1,000pF	102	25	5.0	0.33	40	3.5	0.33	62.5	3.5	0.33	125	3.0	0.33
1,200pF	122	25	5.0	0.33	40	3.5	0.33	62.5	3.5	0.33			
1,500pF	152	25	5.0	0.33	40	3.5	0.33	62.5	3.5	0.33			
1,800pF	182	25	5.0	0.33	40	3.5	0.33	62.5	3.5	0.33			
2,200pF	222	25	5.0	0.33	40	3.5	0.33	62.5	3.5	0.33			
2,700pF	272	25	5.0	0.33	40	3.5	0.33	62.5	3.5	0.33			
3,300pF	332	25	5.0	0.33	40	3.5	0.33	62.5	3.5	0.33			
3,900pF	392	25	5.0	0.33	40	3.5	0.33	62.5	3.5	0.33			
4,700pF	472	25	5.0	0.33	40	3.5	0.33	62.5	3.5	0.33			
5,600pF	562	25	5.0	0.33	40	3.5	0.33	62.5	3.5	0.33			
6,800pF	682	25	5.0	0.33									
8,200pF	822	25	5.0	0.33									
10,000pF	103	25	5.0	0.33									

(CONSULT FACTORY FOR CAPACITANCE VALUES NOT LISTED)

Packaging Code (T max. ≤1.0mm): C = 7" Reel or for D = 13" reel

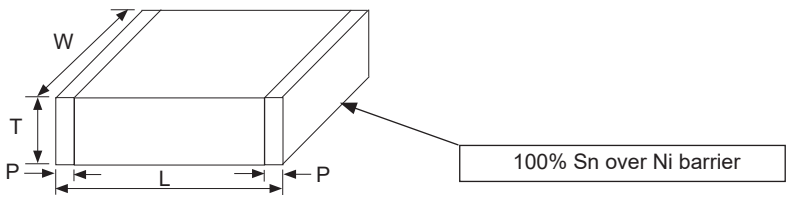

Downloaded from Arrow.com.

NMC-A Series
Surface Mount Automotive Grade Ceramic Chip Capacitors

AEC-Q200 QUALIFIED

ROHS/REACH COMPLIANT HALOGEN FREE

NIC COMPONENTS
Performance Passives By Design

X7R STANDARD VALUES AND SPECIFICATIONS

EIA Case Size		X7R 0402														
Length (L)		1.0 ± 0.05														
Width (W)		0.5 ± 0.05														
Termination Width(P)		0.25 ± 0.1														
Cap. Value	Cap. Code	Working Voltage (VDC)														
		10V			16V			25V			50V			100V		
		DWV	DF (%)	T max. (mm)	DWV	DF (%)	T max. (mm)	DWV	DF (%)	T max. (mm)	DWV	DF (%)	T max. (mm)	DWV	DF (%)	T max. (mm)
100pF	101	25	5.0	0.55	40	3.5	0.55	62.5	3.5	0.55	125	2.5	0.55			
120pF	121	25	5.0	0.55	40	3.5	0.55	62.5	3.5	0.55	125	2.5	0.55			
150pF	151	25	5.0	0.55	40	3.5	0.55	62.5	3.5	0.55	125	2.5	0.55			
180pF	181	25	5.0	0.55	40	3.5	0.55	62.5	3.5	0.55	125	2.5	0.55			
220pF	221	25	5.0	0.55	40	3.5	0.55	62.5	3.5	0.55	125	2.5	0.55	250	2.5	0.55
270pF	271	25	5.0	0.55	40	3.5	0.55	62.5	3.5	0.55	125	2.5	0.55	250	2.5	0.55
330pF	331	25	5.0	0.55	40	3.5	0.55	62.5	3.5	0.55	125	2.5	0.55	250	2.5	0.55
390pF	391	25	5.0	0.55	40	3.5	0.55	62.5	3.5	0.55	125	2.5	0.55	250	2.5	0.55
470pF	471	25	5.0	0.55	40	3.5	0.55	62.5	3.5	0.55	125	2.5	0.55	250	2.5	0.55
560pF	561	25	5.0	0.55	40	3.5	0.55	62.5	3.5	0.55	125	2.5	0.55	250	2.5	0.55
680pF	681	25	5.0	0.55	40	3.5	0.55	62.5	3.5	0.55	125	2.5	0.55	250	2.5	0.55
820pF	821	25	5.0	0.55	40	3.5	0.55	62.5	3.5	0.55	125	2.5	0.55	250	2.5	0.55
1,000pF	102	25	5.0	0.55	40	3.5	0.55	62.5	3.5	0.55	125	2.5	0.55	250	2.5	0.55
1,200pF	122	25	5.0	0.55	40	3.5	0.55	62.5	3.5	0.55	125	2.5	0.55	250	2.5	0.55
1,500pF	152	25	5.0	0.55	40	3.5	0.55	62.5	3.5	0.55	125	2.5	0.55	250	2.5	0.55
1,800pF	182	25	5.0	0.55	40	3.5	0.55	62.5	3.5	0.55	125	2.5	0.55			
2,200pF	222	25	5.0	0.55	40	3.5	0.55	62.5	3.5	0.55	125	2.5	0.55			
2,700pF	272	25	5.0	0.55	40	3.5	0.55	62.5	3.5	0.55	125	2.5	0.55			
3,300pF	332	25	5.0	0.55	40	3.5	0.55	62.5	3.5	0.55	125	2.5	0.55			
3,900pF	392	25	5.0	0.55	40	3.5	0.55	62.5	3.5	0.55	125	2.5	0.55			
4,700pF	472	25	5.0	0.55	40	3.5	0.55	62.5	3.5	0.55	125	2.5	0.55			
5,600pF	562	25	5.0	0.55	40	3.5	0.55	62.5	3.5	0.55	125	2.5	0.55			
6,800pF	682	25	5.0	0.55	40	3.5	0.55	62.5	3.5	0.55	125	2.5	0.55			
8,200pF	822	25	5.0	0.55	40	3.5	0.55	62.5	3.5	0.55	125	2.5	0.55			
10,000pF	103	25	5.0	0.55	40	3.5	0.55	62.5	3.5	0.55	125	2.5	0.55			
15,000pF	153	25	5.0	0.55	40	3.5	0.55	62.5	3.5	0.55	125	5.0	0.55			
22,000pF	223	25	5.0	0.55	40	3.5	0.55	62.5	3.5	0.55	125	5.0	0.55			
33,000pF	333	25	5.0	0.55	40	5.0	0.55	62.5	3.5	0.55	125	5.0	0.55			
47,000pF	473	25	5.0	0.55	40	5.0	0.55	62.5	5.0	0.55	125	5.0	0.55			
68,000pF	683	25	5.0	0.55	40	5.0	0.55	62.5	5.0	0.55	125	5.0	0.55			
100,000pF	104	25	5.0	0.60	40	5.0	0.60	62.5	5.0	0.55	125	5.0	0.55			
220,000pF	224	25	10	0.60												

(CONSULT FACTORY FOR CAPACITANCE VALUES NOT LISTED)

Packaging Code (T max. ≤1.0mm): C = 7" Reel or for D = 13" reel

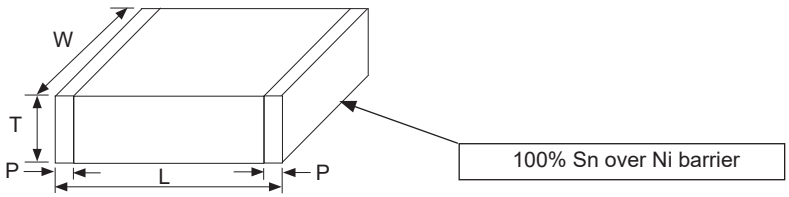

Downloaded from Arrow.com.

NMC-A Series
Surface Mount Automotive Grade Ceramic Chip Capacitors

AEC-Q200 QUALIFIED

ROHS/REACH COMPLIANT HALOGEN FREE

NIC COMPONENTS
Performance Passives By Design

X7R STANDARD VALUES AND SPECIFICATIONS

EIA Case Size		X7R 0603 (Continued on next page)											
Length (L)		1.6 ± 0.15											
Width (W)		0.8 ± 0.15											
Termination Width(P)		0.40 ± 0.15											
Capacitance Value	Capacitance Code	Working Voltage (VDC)											
		10V			16V			25V			50V		
		DWV	DF (%)	T max. (mm)	DWV	DF (%)	T max. (mm)	DWV	DF (%)	T max. (mm)	DWV	DF (%)	T max. (mm)
100pF	101	25	5.0	0.90	40	3.5	0.90	62.5	3.5	0.90	125	2.5	0.90
120pF	121	25	5.0	0.90	40	3.5	0.90	62.5	3.5	0.90	125	2.5	0.90
150pF	151	25	5.0	0.90	40	3.5	0.90	62.5	3.5	0.90	125	2.5	0.90
180pF	181	25	5.0	0.90	40	3.5	0.90	62.5	3.5	0.90	125	2.5	0.90
220pF	221	25	5.0	0.90	40	3.5	0.90	62.5	3.5	0.90	125	2.5	0.90
270pF	271	25	5.0	0.90	40	3.5	0.90	62.5	3.5	0.90	125	2.5	0.90
330pF	331	25	5.0	0.90	40	3.5	0.90	62.5	3.5	0.90	125	2.5	0.90
390pF	391	25	5.0	0.90	40	3.5	0.90	62.5	3.5	0.90	125	2.5	0.90
470pF	471	25	5.0	0.90	40	3.5	0.90	62.5	3.5	0.90	125	2.5	0.90
560pF	561	25	5.0	0.90	40	3.5	0.90	62.5	3.5	0.90	125	2.5	0.90
680pF	681	25	5.0	0.90	40	3.5	0.90	62.5	3.5	0.90	125	2.5	0.90
820pF	821	25	5.0	0.90	40	3.5	0.90	62.5	3.5	0.90	125	2.5	0.90
1,000pF	102	25	5.0	0.90	40	3.5	0.90	62.5	3.5	0.90	125	2.5	0.90
1,200pF	122	25	5.0	0.90	40	3.5	0.90	62.5	3.5	0.90	125	2.5	0.90
1,500pF	152	25	5.0	0.90	40	3.5	0.90	62.5	3.5	0.90	125	2.5	0.90
1,800pF	182	25	5.0	0.90	40	3.5	0.90	62.5	3.5	0.90	125	2.5	0.90
2,200pF	222	25	5.0	0.90	40	3.5	0.90	62.5	3.5	0.90	125	2.5	0.90
2,700pF	272	25	5.0	0.90	40	3.5	0.90	62.5	3.5	0.90	125	2.5	0.90
3,300pF	332	25	5.0	0.90	40	3.5	0.90	62.5	3.5	0.90	125	2.5	0.90
3,900pF	392	25	5.0	0.90	40	3.5	0.90	62.5	3.5	0.90	125	2.5	0.90
4,700pF	472	25	5.0	0.90	40	3.5	0.90	62.5	3.5	0.90	125	2.5	0.90
5,600pF	562	25	5.0	0.90	40	3.5	0.90	62.5	3.5	0.90	125	2.5	0.90
6,800pF	682	25	5.0	0.90	40	3.5	0.90	62.5	3.5	0.90	125	2.5	0.90
8,200pF	822	25	5.0	0.90	40	3.5	0.90	62.5	3.5	0.90	125	2.5	0.90
0.01µF	103	25	5.0	0.90	40	3.5	0.90	62.5	3.5	0.90	125	2.5	0.90
0.012µF	123	25	5.0	0.90	40	3.5	0.90	62.5	3.5	0.90	125	2.5	0.90
0.015µF	153	25	5.0	0.90	40	3.5	0.90	62.5	3.5	0.90	125	2.5	0.90
0.018µF	183	25	5.0	0.90	40	3.5	0.90	62.5	3.5	0.90	125	2.5	0.90
0.022µF	223	25	5.0	0.90	40	3.5	0.90	62.5	3.5	0.90	125	2.5	0.90
0.027µF	273	25	5.0	0.90	40	3.5	0.90	62.5	3.5	0.90	125	2.5	0.90
0.033µF	333	25	5.0	0.90	40	3.5	0.90	62.5	3.5	0.90	125	2.5	0.95
0.039µF	393	25	5.0	0.90	40	3.5	0.90	62.5	3.5	0.90	125	2.5	0.95
0.047µF	473	25	5.0	0.90	40	3.5	0.90	62.5	3.5	0.90	125	3.5	0.95
0.056µF	563	25	5.0	0.90	40	3.5	0.90	62.5	3.5	0.90	125	3.5	0.95
0.068µF	683	25	5.0	0.90	40	3.5	0.90	62.5	3.5	0.90	125	3.5	0.95
0.082µF	823	25	5.0	0.90	40	3.5	0.90	62.5	3.5	0.90	125	3.5	0.95
0.10µF	104	25	5.0	0.90	40	3.5	0.90	62.5	3.5	0.90	125	3.5	0.95
0.15µF	154	25	5.0	0.90	40	3.5	0.90						
0.22µF	224	25	5.0	0.90	40	3.5	0.90	62.5	3.5	0.90	125	3.5	0.90
0.47µF	474	25	5.0	0.90	40	5.0	0.90						
0.68µF	684	25	5.0	0.90	40	5.0	0.90						
1.0µF	105	25	5.0	0.90	40	5.0	0.90	62.5	5.0	0.90			

(CONSULT FACTORY FOR CAPACITANCE VALUES NOT LISTED)

Packaging Code (T max. ≤1.0mm): C = 7" Reel or for D = 13" reel

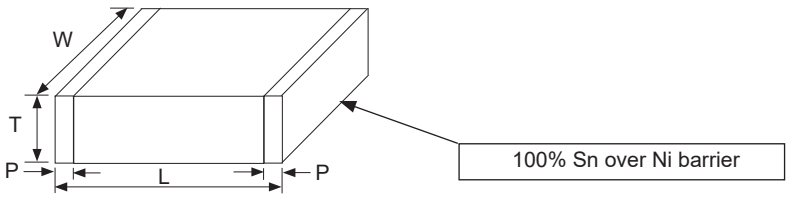

Downloaded from Arrow.com.

NMC-A Series
Surface Mount Automotive Grade Ceramic Chip Capacitors

AEC-Q200 QUALIFIED

ROHS/REACH COMPLIANT HALOGEN FREE

NIC COMPONENTS
Performance Passives By Design

X7R STANDARD VALUES AND SPECIFICATIONS

EIA Case Size		X7R 0603		
Length (L)		1.6 ± 0.15		
Width (W)		0.8 ± 0.15		
Termination Width(P)		0.40 ± 0.15		
Capacitance Value	Capacitance Code	Working Voltage (VDC)		
		100V		
		DWV	DF (%)	T max. (mm)
100pF	101	250	2.5	0.90
120pF	121	250	2.5	0.90
150pF	151	250	2.5	0.90
180pF	181	250	2.5	0.90
220pF	221	250	2.5	0.90
270pF	271	250	2.5	0.90
330pF	331	250	2.5	0.90
390pF	391	250	2.5	0.90
470pF	471	250	2.5	0.90
560pF	561	250	2.5	0.90
680pF	681	250	2.5	0.90
820pF	821	250	2.5	0.90
1,000pF	102	250	2.5	0.90
1,200pF	122	250	2.5	0.90
1,500pF	152	250	2.5	0.90
1,800pF	182	250	2.5	0.90
2,200pF	222	250	2.5	0.90
2,700pF	272	250	2.5	0.90
3,300pF	332	250	2.5	0.90
3,900pF	392	250	2.5	0.90
4,700pF	472	250	2.5	0.90
5,600pF	562	250	2.5	0.90
6,800pF	682	250	2.5	0.90
8,200pF	822	250	2.5	0.90
10,000pF	103	250	2.5	0.90
15,000pF	153	250	5.0	0.90
22,000pF	223	250	5.0	0.90
33,000pF	333	250	5.0	0.90
47,000pF	473	250	5.0	0.90

(CONSULT FACTORY FOR CAPACITANCE VALUES NOT LISTED)

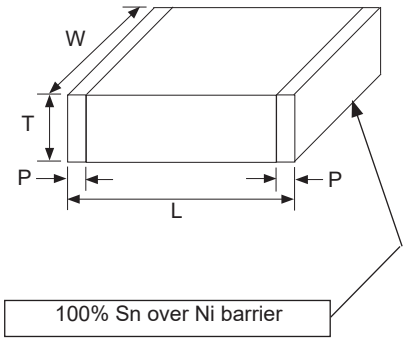

EIA Case Size		X7R 0805 (Continued on next page)					
Length (L)		2.0 ± 0.20					
Width (W)		1.25 ± 0.20					
Termination Width(P)		0.50 ± 0.20					
Capacitance Value	Capacitance Code	Working Voltage (VDC)					
		10V			16V		
		DWV	DF (%)	T max. (mm)	DWV	DF (%)	T max. (mm)
100pF	101	25	5.0	0.95	40	3.5	0.95
120pF	121	25	5.0	0.95	40	3.5	0.95
150pF	151	25	5.0	0.95	40	3.5	0.95
180pF	181	25	5.0	0.95	40	3.5	0.95
220pF	221	25	5.0	0.95	40	3.5	0.95
270pF	271	25	5.0	0.95	40	3.5	0.95
330pF	331	25	5.0	0.95	40	3.5	0.95
390pF	391	25	5.0	0.95	40	3.5	0.95
470pF	471	25	5.0	0.95	40	3.5	0.95
560pF	561	25	5.0	0.95	40	3.5	0.95
680pF	681	25	5.0	0.95	40	3.5	0.95
820pF	821	25	5.0	0.95	40	3.5	0.95
1000pF	102	25	5.0	0.95	40	3.5	0.95
1200pF	122	25	5.0	0.95	40	3.5	0.95
1500pF	152	25	5.0	0.95	40	3.5	0.95
1800pF	182	25	5.0	0.95	40	3.5	0.95
2200pF	222	25	5.0	0.95	40	3.5	0.95
2700pF	272	25	5.0	0.95	40	3.5	0.95
3300pF	332	25	5.0	0.95	40	3.5	0.95
3900pF	392	25	5.0	0.95	40	3.5	0.95
4700pF	472	25	5.0	0.95	40	3.5	0.95
5600pF	562	25	5.0	0.95	40	3.5	0.95
6800pF	682	25	5.0	0.95	40	3.5	0.95
8200pF	822	25	5.0	0.95	40	3.5	0.95
0.01µF	103	25	5.0	0.95	40	3.5	0.95
0.012µF	123	25	5.0	0.95	40	3.5	0.95
0.015µF	153	25	5.0	0.95	40	3.5	0.95
0.018µF	183	25	5.0	0.95	40	3.5	0.95
0.022µF	223	25	5.0	0.95	40	3.5	0.95
0.027µF	273	25	5.0	0.95	40	3.5	0.95
0.033µF	333	25	5.0	0.95	40	3.5	0.95
0.039µF	393	25	5.0	0.95	40	3.5	0.95
0.047µF	473	25	5.0	0.95	40	3.5	0.95
0.056µF	563	25	5.0	0.95	40	3.5	0.95
0.068µF	683	25	5.0	0.95	40	3.5	0.95
0.082µF	823	25	5.0	0.95	40	3.5	0.95
0.1µF	104	25	5.0	0.95	40	3.5	0.95
0.12µF	124	25	5.0	0.95	40	3.5	0.95
0.15µF	154	25	5.0	1.35	40	3.5	1.35
0.18µF	184	25	5.0	1.35	40	3.5	1.35
0.22µF	224	25	5.0	1.35	40	3.5	1.35
0.27µF	274	25	5.0	1.35	40	3.5	1.35
0.33µF	334	25	5.0	1.45	40	3.5	1.45
0.39µF	394	25	5.0	1.45	40	3.5	1.45
0.47µF	474	25	5.0	1.45	40	3.5	1.45
0.56µF	564	25	5.0	1.45	40	5.0	1.45
0.68µF	684	25	5.0	1.45	40	5.0	1.45
0.82µF	824	25	5.0	1.45	40	5.0	1.45
1.0µF	105	25	5.0	1.45	40	5.0	1.45
2.2µF	225	25	5.0	1.45			

Packaging Code (T max. ≤1.0mm): C = 7" Reel or for D = 13" reel
(T max. >1.0mm): E = 7" Reel or for F = 13" reel

Downloaded from Arrow.com.

NMC-A Series
Surface Mount Automotive Grade Ceramic Chip Capacitors

AEC-Q200 QUALIFIED

ROHS/REACH COMPLIANT HALOGEN FREE

NIC COMPONENTS
Performance Passives By Design

X7R STANDARD VALUES AND SPECIFICATIONS

EIA Case Size		X7R 0805 (Continued on next page)											
Length (L)		2.0 ± 0.20											
Width (W)		1.25 ± 0.20											
Termination Width(P)		0.50 ± 0.20											
Capacitance Value	Capacitance Code	Working Voltage (VDC)											
		25V			50V			100V			200V		
		DWV	DF (%)	T max. (mm)	DWV	DF (%)	T max. (mm)	DWV	DF (%)	T max. (mm)	DWV	DF (%)	T max. (mm)
100pF	101	62.5	3.5	0.95	125	2.5	0.95	250	2.5	0.95	400	2.5	0.95
120pF	121	62.5	3.5	0.95	125	2.5	0.95	250	2.5	0.95	400	2.5	0.95
150pF	151	62.5	3.5	0.95	125	2.5	0.95	250	2.5	0.95	400	2.5	0.95
180pF	181	62.5	3.5	0.95	125	2.5	0.95	250	2.5	0.95	400	2.5	0.95
220pF	221	62.5	3.5	0.95	125	2.5	0.95	250	2.5	0.95	400	2.5	0.95
270pF	271	62.5	3.5	0.95	125	2.5	0.95	250	2.5	0.95	400	2.5	0.95
330pF	331	62.5	3.5	0.95	125	2.5	0.95	250	2.5	0.95	400	2.5	0.95
390pF	391	62.5	3.5	0.95	125	2.5	0.95	250	2.5	0.95	400	2.5	0.95
470pF	471	62.5	3.5	0.95	125	2.5	0.95	250	2.5	0.95	400	2.5	0.95
560pF	561	62.5	3.5	0.95	125	2.5	0.95	250	2.5	0.95	400	2.5	0.95
680pF	681	62.5	3.5	0.95	125	2.5	0.95	250	2.5	0.95	400	2.5	0.95
820pF	821	62.5	3.5	0.95	125	2.5	0.95	250	2.5	0.95	400	2.5	0.95
1000pF	102	62.5	3.5	0.95	125	2.5	0.95	250	2.5	0.95	400	2.5	0.95
1200pF	122	62.5	3.5	0.95	125	2.5	0.95	250	2.5	0.95	400	2.5	0.95
1500pF	152	62.5	3.5	0.95	125	2.5	0.95	250	2.5	0.95	400	2.5	0.95
1800pF	182	62.5	3.5	0.95	125	2.5	0.95	250	2.5	0.95	400	2.5	0.95
2200pF	222	62.5	3.5	0.95	125	2.5	0.95	250	2.5	0.95	400	2.5	0.95
2700pF	272	62.5	3.5	0.95	125	2.5	0.95	250	2.5	0.95	400	2.5	0.95
3300pF	332	62.5	3.5	0.95	125	2.5	0.95	250	2.5	0.95	400	2.5	0.95
3900pF	392	62.5	3.5	0.95	125	2.5	0.95	250	2.5	0.95	400	2.5	0.95
4700pF	472	62.5	3.5	0.95	125	2.5	0.95	250	2.5	0.95	400	2.5	0.95
5600pF	562	62.5	3.5	0.95	125	2.5	0.95	250	2.5	0.95	400	2.5	0.95
6800pF	682	62.5	3.5	0.95	125	2.5	0.95	250	2.5	0.95	400	2.5	0.95
8200pF	822	62.5	3.5	0.95	125	2.5	0.95	250	2.5	0.95	400	2.5	0.95
0.01µF	103	62.5	3.5	0.95	125	2.5	0.95	250	2.5	0.95	400	2.5	1.45
0.012µF	123	62.5	3.5	0.95	125	2.5	0.95	250	2.5	0.95	400	2.5	1.45
0.015µF	153	62.5	3.5	0.95	125	2.5	0.95	250	2.5	0.95	400	2.5	1.45
0.018µF	183	62.5	3.5	0.95	125	2.5	0.95	250	2.5	0.95	400	2.5	1.45
0.022µF	223	62.5	3.5	0.95	125	2.5	0.95	250	2.5	0.95	400	2.5	1.45
0.027µF	273	62.5	3.5	0.95	125	2.5	0.95	250	2.5	1.45			
0.033µF	333	62.5	3.5	0.95	125	2.5	0.95	250	2.5	1.45			
0.039µF	393	62.5	3.5	0.95	125	2.5	0.95	250	2.5	1.45			
0.047µF	473	62.5	3.5	0.95	125	2.5	0.95	250	2.5	1.45			
0.056µF	563	62.5	3.5	0.95	125	2.5	0.95	250	2.5	1.45			
0.068µF	683	62.5	3.5	0.95	125	2.5	0.95/1.45	250	2.5	1.45			
0.082µF	823	62.5	3.5	0.95	125	2.5	0.95/1.45	250	2.5	1.45			
0.10µF	104	62.5	3.5	0.95	125	2.5	0.95/1.45	250	5.0	1.45			
0.12µF	124	62.5	3.5	0.95	125	2.5	1.45						
0.15µF	154	62.5	3.5	1.35	125	2.5	1.45						
0.18µF	184	62.5	3.5	1.35	125	3.0	1.45						
0.22µF	224	62.5	3.5	1.35	125	3.5	1.45						
0.27µF	274	62.5	3.5	1.35									
0.33µF	334	62.5	3.5	1.45	125	3.5	1.45						
0.39µF	394	62.5	3.5	1.45									
0.47µF	474	62.5	3.5	1.45	125	3.5	1.45						
0.56µF	564	62.5	5.0	1.45									
0.68µF	684	62.5	5.0	1.45									
0.82µF	824	62.5	5.0	1.45									
1.0µF	105	62.5	5.0	1.45	125	5.0	1.45						
2.2µF	225	62.5	5.0	1.45									

(CONSULT FACTORY FOR CAPACITANCE VALUES NOT LISTED)

Packaging Code (T max. ≤1.0mm): C = 7" Reel or for D = 13" reel
(T max. >1.0mm): E = 7" Reel or for F = 13" reel

Downloaded from Arrow.com.

NMC-A Series
Surface Mount Automotive Grade Ceramic Chip Capacitors

AEC-Q200 QUALIFIED

ROHS/REACH COMPLIANT HALOGEN FREE

NIC COMPONENTS
Performance Passives By Design

X7R STANDARD VALUES AND SPECIFICATIONS

EIA Case Size		X7R 0805								
Length (L)		2.0 ± 0.20								
Width (W)		1.25 ± 0.20								
Termination Width(P)		0.50 ± 0.20								
Capacitance Value	Capacitance Code	Working Voltage (VDC)								
		250V			500V			630V		
		DWV	DF (%)	T max. (mm)	DWV	DF (%)	T max. (mm)	DWV	DF (%)	T max. (mm)
100pF	101	425	2.5	0.95	650	2.5	0.95	945	2.5	0.9
120pF	121	425	2.5	0.95	650	2.5	0.95	945	2.5	0.9
150pF	151	425	2.5	0.95	650	2.5	0.95	945	2.5	0.9
180pF	181	425	2.5	0.95	650	2.5	0.95	945	2.5	0.9
220pF	221	425	2.5	0.95	650	2.5	0.95	945	2.5	0.9
270pF	271	425	2.5	0.95	650	2.5	0.95	945	2.5	0.9
330pF	331	425	2.5	0.95	650	2.5	0.95	945	2.5	0.9
390pF	391	425	2.5	0.95	650	2.5	0.95	945	2.5	0.9
470pF	471	425	2.5	0.95	650	2.5	0.95	945	2.5	0.9
560pF	561	425	2.5	0.95	650	2.5	0.95	945	2.5	0.9
680pF	681	425	2.5	0.95	650	2.5	0.95	945	2.5	0.9
820pF	821	425	2.5	0.95	650	2.5	0.95	945	2.5	0.9
1000pF	102	425	2.5	0.95	650	2.5	0.95	945	2.5	0.9
1200pF	122	425	2.5	0.95	650	2.5	0.95	945	2.5	0.9
1500pF	152	425	2.5	0.95	650	2.5	0.95	945	2.5	0.9
1800pF	182	425	2.5	0.95	650	2.5	0.95	945	2.5	0.9
2200pF	222	425	2.5	0.95	650	2.5	0.95	945	2.5	0.9
2700pF	272	425	2.5	0.95	650	2.5	0.95	945	2.5	0.9
3300pF	332	425	2.5	0.95	650	2.5	0.95	945	2.5	0.9
3900pF	392	425	2.5	0.95	650	2.5	0.95	945	2.5	0.9
4700pF	472	425	2.5	0.95	650	2.5	0.95/1.35	945	2.5	1.35
5600pF	562	425	2.5	0.9	650	2.5	1.35	945	2.5	1.35
6800pF	682	425	2.5	0.9	650	2.5	1.35	945	2.5	1.35
8200pF	822	425	2.5	0.9	650	2.5	1.35	945	2.5	1.35
0.01µF	103	425	2.5	1.35	650	2.5	1.35	945	2.5	1.35
0.012µF	123	425	2.5	1.35						
0.015µF	153	425	2.5	1.35						
0.018µF	183	425	2.5	1.35						
0.022µF	223	425	2.5	1.35						

(CONSULT FACTORY FOR CAPACITANCE VALUES NOT LISTED)

Packaging Code (T max. ≤1.0mm): C = 7" Reel or for D = 13" reel
(T max. >1.0mm): E = 7" Reel or for F = 13" reel

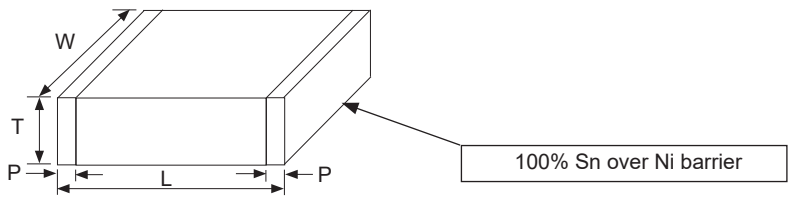

Downloaded from Arrow.com.

NMC-A Series
Surface Mount Automotive Grade Ceramic Chip Capacitors

AEC-Q200 QUALIFIED

ROHS/REACH COMPLIANT HALOGEN FREE

NIC COMPONENTS
Performance Passives By Design

X7R STANDARD VALUES AND SPECIFICATIONS

EIA Case Size		X7R 1206 (Continued on next page)														
Length (L)		3.2 ± 0.40														
Width (W)		1.60 ± 0.30														
Termination Width(P)		0.60 ± 0.20														
Capacitance Value	Capacitance Code	Working Voltage (VDC)														
		6.3V			10V			16V			25V			50V		
		DWV	DF (%)	T max. (mm)	DWV	DF (%)	T max. (mm)	DWV	DF (%)	T max. (mm)	DWV	DF (%)	T max. (mm)	DWV	DF (%)	T max. (mm)
220pF	221				25	5	0.9	40	3.5	0.9	62.5	3.5	0.9	125	2.5	0.9
270pF	271				25	5	0.9	40	3.5	0.9	62.5	3.5	0.9	125	2.5	0.9
330pF	331				25	5	0.9	40	3.5	0.9	62.5	3.5	0.9	125	2.5	0.9
390pF	391				25	5	0.9	40	3.5	0.9	62.5	3.5	0.9	125	2.5	0.9
470pF	471				25	5	0.9	40	3.5	0.9	62.5	3.5	0.9	125	2.5	0.9
560pF	561				25	5	0.9	40	3.5	0.9	62.5	3.5	0.9	125	2.5	0.9
680pF	681				25	5	0.9	40	3.5	0.9	62.5	3.5	0.9	125	2.5	0.9
820pF	821				25	5	0.9	40	3.5	0.9	62.5	3.5	0.9	125	2.5	0.9
1000pF	102				25	5	0.9	40	3.5	0.9	62.5	3.5	0.9	125	2.5	0.9
1200pF	122				25	5	0.9	40	3.5	0.9	62.5	3.5	0.9	125	2.5	0.9
1500pF	152				25	5	0.9	40	3.5	0.9	62.5	3.5	0.9	125	2.5	0.9
1800pF	182				25	5	0.9	40	3.5	0.9	62.5	3.5	0.9	125	2.5	0.9
2200pF	222				25	5	0.9	40	3.5	0.9	62.5	3.5	0.9	125	2.5	0.9
2700pF	272				25	5	0.9	40	3.5	0.9	62.5	3.5	0.9	125	2.5	0.9
3300pF	332				25	5	0.9	40	3.5	0.9	62.5	3.5	0.9	125	2.5	0.9
3900pF	392				25	5	0.9	40	3.5	0.9	62.5	3.5	0.9	125	2.5	0.9
4700pF	472				25	5	0.9	40	3.5	0.9	62.5	3.5	0.9	125	2.5	0.9
5600pF	562				25	5	0.9	40	3.5	0.9	62.5	3.5	0.9	125	2.5	0.9
6800pF	682				25	5	0.9	40	3.5	0.9	62.5	3.5	0.9	125	2.5	0.9
8200pF	822				25	5	0.9	40	3.5	0.9	62.5	3.5	0.9	125	2.5	0.9
0.01µF	103				25	5	0.9	40	3.5	0.9	62.5	3.5	0.9	125	2.5	0.9
0.012µF	123				25	5	0.9	40	3.5	0.9	62.5	3.5	0.9	125	2.5	0.9
0.015µF	153				25	5	0.9	40	3.5	0.9	62.5	3.5	0.9	125	2.5	0.9
0.018µF	183				25	5	0.9	40	3.5	0.9	62.5	3.5	0.9	125	2.5	0.9
0.022µF	223				25	5	0.95	40	3.5	0.95	62.5	3.5	0.95	125	2.5	0.95
0.027µF	273				25	5	0.95	40	3.5	0.95	62.5	3.5	0.95	125	2.5	0.95
0.033µF	333				25	5	0.95	40	3.5	0.95	62.5	3.5	0.95	125	2.5	0.95
0.039µF	393				25	5	0.95	40	3.5	0.95	62.5	3.5	0.95	125	2.5	0.95
0.047µF	473				25	5	0.95	40	3.5	0.95	62.5	3.5	0.95	125	2.5	0.95
0.056µF	563				25	5	0.95	40	3.5	0.95	62.5	3.5	0.95	125	2.5	0.95
0.068µF	683				25	5	0.95	40	3.5	0.95	62.5	3.5	0.95	125	2.5	0.95
0.082µF	823				25	5	0.95	40	3.5	0.95	62.5	3.5	0.95	125	2.5	0.95
0.10µF	104				25	5	0.95	40	3.5	0.95	62.5	3.5	0.95	125	2.5	0.95
0.12µF	124				25	5	0.95	40	3.5	0.95	62.5	3.5	0.95	125	2.5	0.95
0.15µF	154				25	5	1.05	40	3.5	1.05	62.5	3.5	1.05	125	2.5	1.05
0.18µF	184				25	5	1.05	40	3.5	1.05	62.5	3.5	1.05	125	2.5	1.05
0.22µF	224				25	5	1.05	40	3.5	1.05	62.5	3.5	1.05	125	2.5	1.05
0.27µF	274				25	5	1.05	40	3.5	1.05	62.5	3.5	1.05	125	2.5	1.35
0.33µF	334				25	5	1.05	40	3.5	1.05	62.5	3.5	1.05	125	2.5	1.35
0.39µF	394				25	5	1.05	40	3.5	1.05	62.5	3.5	1.3	125	2.5	1.9
0.47µF	474				25	5	1.3	40	3.5	1.3	62.5	3.5	1.3	125	3.0	1.9
0.56µF	564				25	5	1.3	40	3.5	1.3	62.5	3.5	1.3	125	3.0	1.9
0.68µF	684				25	5	1.3	40	3.5	1.3	62.5	3.5	1.8	125	5	1.9
0.82µF	824				25	5	1.3	40	3.5	1.3	62.5	3.5	1.8	125	5	1.9
1.0µF	105	15.75	5	1.25	25	5	1.3	40	3.5	1.3	62.5	3.5	1.8	125	5	1.9
2.2µF	225	15.75	5	1.8	25	5	1.8	40	5	1.8	62.5	5	1.8	125	5	1.9
10µF	106	15.75	10	1.8												

(CONSULT FACTORY FOR CAPACITANCE VALUES NOT LISTED)

Packaging Code (T max. ≤1.0mm): C = 7" Reel or for D = 13" reel
(T max. >1.0mm): E = 7" Reel or for F = 13" reel

Downloaded from Arrow.com.

NMC-A Series
Surface Mount Automotive Grade Ceramic Chip Capacitors

AEC-Q200 QUALIFIED

ROHS/REACH COMPLIANT HALOGEN FREE

NIC COMPONENTS
Performance Passives By Design

X7R STANDARD VALUES AND SPECIFICATIONS

EIA Case Size		X7R 1206 (Continued on next page)											
Length (L)		3.2 ± 0.40											
Width (W)		1.60 ± 0.30											
Termination Width(P)		0.60 ± 0.20											
Capacitance Value	Capacitance Code	Working Voltage (VDC)											
		100V			200V			250V			500V		
		DWV	DF (%)	T max. (mm)	DWV	DF (%)	T max. (mm)	DWV	DF (%)	T max. (mm)	DWV	DF (%)	T max. (mm)
100pF	101				400	2.5	1.9	425	2.5	1.9	650	2.5	1.9
120pF	121				400	2.5	1.9	425	2.5	1.9	650	2.5	1.9
150pF	151				400	2.5	1.9	425	2.5	1.9	650	2.5	1.9
180pF	181				400	2.5	1.9	425	2.5	1.9	650	2.5	1.9
220pF	221	250	2.5	0.9	400	2.5	1.9	425	2.5	1.9	650	2.5	1.9
270pF	271	250	2.5	0.9	400	2.5	1.9	425	2.5	1.9	650	2.5	1.9
330pF	331	250	2.5	0.9	400	2.5	1.9	425	2.5	1.9	650	2.5	1.9
390pF	391	250	2.5	0.9	400	2.5	1.9	425	2.5	1.9	650	2.5	1.9
470pF	471	250	2.5	0.9	400	2.5	1.9	425	2.5	1.9	650	2.5	1.9
560pF	561	250	2.5	0.9	400	2.5	1.9	425	2.5	1.9	650	2.5	1.9
680pF	681	250	2.5	0.9	400	2.5	1.9	425	2.5	1.9	650	2.5	1.9
820pF	821	250	2.5	0.9	400	2.5	1.9	425	2.5	1.9	650	2.5	1.9
1000pF	102	250	2.5	0.9	400	2.5	1.9	425	2.5	1.9	650	2.5	1.9
1200pF	122	250	2.5	0.9	400	2.5	1.9	425	2.5	1.9	650	2.5	1.9
1500pF	152	250	2.5	0.9	400	2.5	1.9	425	2.5	1.9	650	2.5	1.9
1800pF	182	250	2.5	0.9	400	2.5	1.9	425	2.5	1.9	650	2.5	1.9
2200pF	222	250	2.5	0.9	400	2.5	1.9	425	2.5	1.9	650	2.5	1.9
2700pF	272	250	2.5	0.9	400	2.5	1.9	425	2.5	1.9	650	2.5	1.9
3300pF	332	250	2.5	0.9	400	2.5	1.9	425	2.5	1.9	650	2.5	1.9
3900pF	392	250	2.5	0.9	400	2.5	1.9	425	2.5	1.9	650	2.5	1.9
4700pF	472	250	2.5	0.9	400	2.5	1.9	425	2.5	1.9	650	2.5	1.9
5600pF	562	250	2.5	0.9	400	2.5	1.9	425	2.5	1.9	650	2.5	1.9
6800pF	682	250	2.5	0.9	400	2.5	1.9	425	2.5	1.9	650	2.5	1.9
8200pF	822	250	2.5	0.9	400	2.5	1.9	425	2.5	1.9	650	2.5	1.9
0.01µF	103	250	2.5	0.9	400	2.5	1.9	425	2.5	1.9	650	2.5	1.9
0.012µF	123	250	2.5	0.9	400	2.5	1.9	425	2.5	1.9			
0.015µF	153	250	2.5	0.9	400	2.5	1.9	425	2.5	1.9			
0.018µF	183	250	2.5	0.9	400	2.5	1.9	425	2.5	1.9			
0.022µF	223	250	2.5	0.95	400	2.5	1.9	425	2.5	1.45/1.9			
0.027µF	273	250	2.5	0.95									
0.033µF	333	250	2.5	0.95				425	2.5	1.90			
0.039µF	393	250	2.5	0.95									
0.047µF	473	250	2.5	0.95				425	2.5	1.90			
0.056µF	563	250	2.5	0.95									
0.068µF	683	250	2.5	0.95/1.45				425	2.5	1.90			
0.082µF	823	250	2.5	1.45									
0.10µF	104	250	2.5	1.45				425	2.5	1.90			
0.12µF	124	250	2.5	1.45									
0.15µF	154	250	2.5	1.9									
0.18µF	184	250	2.5	1.9									
0.22µF	224	250	2.5	1.9									
0.33µF	334	250	2.5	1.9									
0.47µF	474	250	2.5	1.9									
0.68µF	684	250	5.0	1.9									
1.0µF	105	250	5.0	1.9									
2.2µF	225	250	5.0	1.9									

(CONSULT FACTORY FOR CAPACITANCE VALUES NOT LISTED)

Packaging Code (T max. ≤1.0mm): C = 7" Reel or for D = 13" reel
(T max. >1.0mm): E = 7" Reel or for F = 13" reel

Downloaded from Arrow.com.

NMC-A Series
Surface Mount Automotive Grade Ceramic Chip Capacitors

AEC-Q200 QUALIFIED

ROHS/REACH COMPLIANT HALOGEN FREE

NIC COMPONENTS
Performance Passives By Design

X7R STANDARD VALUES AND SPECIFICATIONS

EIA Case Size		1206		
Length (L)		3.2 ± 0.40		
Width (W)		1.60 ± 0.30		
Termination Width(P)		0.60 ± 0.20		
Capacitance Value	Capacitance Code	Working Voltage (VDC)		
		630V		
		DWV	DF (%)	T max. (mm)
100pF	101	945	2.5	1.9
120pF	121	945	2.5	1.9
150pF	151	945	2.5	1.9
180pF	181	945	2.5	1.9
220pF	221	945	2.5	1.9
270pF	271	945	2.5	1.9
330pF	331	945	2.5	1.9
390pF	391	945	2.5	1.9
470pF	471	945	2.5	1.9
560pF	561	945	2.5	1.9
680pF	681	945	2.5	1.9
820pF	821	945	2.5	1.9
1000pF	102	945	2.5	1.9
1200pF	122	945	2.5	1.9
1500pF	152	945	2.5	1.9
1800pF	182	945	2.5	1.9
2200pF	222	945	2.5	1.9
2700pF	272	945	2.5	1.9
3300pF	332	945	2.5	1.9
3900pF	392	945	2.5	1.9
4700pF	472	945	2.5	1.9
5600pF	562	945	2.5	1.9
6800pF	682	945	2.5	1.9
8200pF	822	945	2.5	1.9
0.01µF	103	945	2.5	1.9

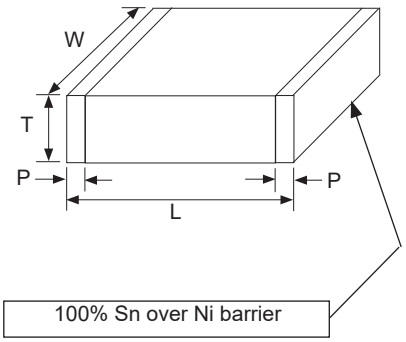

(CONSULT FACTORY FOR CAPACITANCE VALUES NOT LISTED)

Packaging Code: (T max. >1.0mm): E = 7" Reel or for F = 13" reel

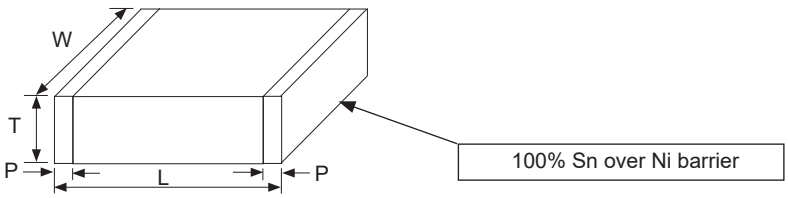

Downloaded from Arrow.com.

NMC-A Series
Surface Mount Automotive Grade Ceramic Chip Capacitors

AEC-Q200 QUALIFIED

ROHS/REACH COMPLIANT HALOGEN FREE

NIC COMPONENTS
Performance Passives By Design

X7R STANDARD VALUES AND SPECIFICATIONS

EIA Case Size		X7R 1210 (Continued on next page)											
Length (L)		3.20 ±0.40											
Width (W)		2.50 ± 0.30											
Termination Width(P)		0.75 ± 0.25											
Capacitance Value	Capacitance Code	Working Voltage (VDC)											
		10V			16V			25V			50V		
		DWV	DF (%)	T max. (mm)	DWV	DF (%)	T max. (mm)	DWV	DF (%)	T max. (mm)	DWV	DF (%)	T max. (mm)
1,000pF	102	25	5.0	1.05	40	3.5	1.05	62.5	3.5	1.05	125	2.5	1.05
1,200pF	122	25	5.0	1.05	40	3.5	1.05	62.5	3.5	1.05	125	2.5	1.05
1,500pF	152	25	5.0	1.05	40	3.5	1.05	62.5	3.5	1.05	125	2.5	1.05
1,800pF	182	25	5.0	1.05	40	3.5	1.05	62.5	3.5	1.05	125	2.5	1.05
2,200pF	222	25	5.0	1.05	40	3.5	1.05	62.5	3.5	1.05	125	2.5	1.05
2,700pF	272	25	5.0	1.05	40	3.5	1.05	62.5	3.5	1.05	125	2.5	1.05
3,300pF	332	25	5.0	1.05	40	3.5	1.05	62.5	3.5	1.05	125	2.5	1.05
3,900pF	392	25	5.0	1.05	40	3.5	1.05	62.5	3.5	1.05	125	2.5	1.05
4,700pF	472	25	5.0	1.05	40	3.5	1.05	62.5	3.5	1.05	125	2.5	1.05
5,600pF	562	25	5.0	1.05	40	3.5	1.05	62.5	3.5	1.05	125	2.5	1.05
6,800pF	682	25	5.0	1.05	40	3.5	1.05	62.5	3.5	1.05	125	2.5	1.05
8,200pF	822	25	5.0	1.05	40	3.5	1.05	62.5	3.5	1.05	125	2.5	1.05
10,000pF	103	25	5.0	1.05	40	3.5	1.05	62.5	3.5	1.05	125	2.5	1.05
0.012µF	123	25	5.0	1.05	40	3.5	1.05	62.5	3.5	1.05	125	2.5	1.05
0.015µF	153	25	5.0	1.05	40	3.5	1.05	62.5	3.5	1.05	125	2.5	1.05
0.018µF	183	25	5.0	1.05	40	3.5	1.05	62.5	3.5	1.05	125	2.5	1.05
0.022µF	223	25	5.0	1.05	40	3.5	1.05	62.5	3.5	1.05	125	2.5	1.05
0.027µF	273	25	5.0	1.05	40	3.5	1.05	62.5	3.5	1.05	125	2.5	1.05
0.033µF	333	25	5.0	1.05	40	3.5	1.05	62.5	3.5	1.05	125	2.5	1.05
0.039µF	393	25	5.0	1.05	40	3.5	1.05	62.5	3.5	1.05	125	2.5	1.05
0.047µF	473	25	5.0	1.05	40	3.5	1.05	62.5	3.5	1.05	125	2.5	1.05
0.056µF	563	25	5.0	1.05	40	3.5	1.05	62.5	3.5	1.05	125	2.5	1.05
0.068µF	683	25	5.0	1.05	40	3.5	1.05	62.5	3.5	1.05	125	2.5	1.05
0.082µF	823	25	5.0	1.05	40	3.5	1.05	62.5	3.5	1.05	125	2.5	1.05
0.10µF	104	25	5.0	1.05	40	3.5	1.05	62.5	3.5	1.05	125	2.5	1.05
0.12µF	124	25	5.0	1.05	40	3.5	1.05	62.5	3.5	1.05	125	2.5	1.05
0.15µF	154	25	5.0	1.05	40	3.5	1.05	62.5	3.5	1.05	125	2.5	1.05
0.18µF	184	25	5.0	1.05	40	3.5	1.05	62.5	3.5	1.05	125	2.5	1.05
0.22µF	224	25	5.0	1.05	40	3.5	1.05	62.5	3.5	1.05	125	2.5	1.05
0.33µF	334	25	5.0	1.05	40	3.5	1.05	62.5	2.5	1.05	125	2.5	1.25
0.47µF	474	25	5.0	1.05	40	3.5	1.05	62.5	2.5	1.45	125	2.5	1.45
1.0µF	105	25	5.0	1.45	40	3.5	1.05	62.5	2.5	1.45	125	2.5	1.45
2.2µF	225				40	3.5	2.20						

(CONSULT FACTORY FOR CAPACITANCE VALUES NOT LISTED)

Packaging Code (T max. ≤1.0mm): C = 7" Reel or for D = 13" reel
(T max. >1.0mm): E = 7" Reel or for F = 13" reel

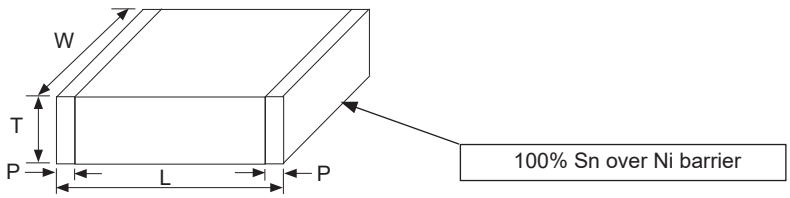

Downloaded from Arrow.com.

NMC-A Series

Surface Mount Automotive Grade Ceramic Chip Capacitors

AEC-Q200 QUALIFIED

ROHS/REACH COMPLIANT HALOGEN FREE

NIC COMPONENTS Performance Passives By Design

X7R STANDARD VALUES AND SPECIFICATIONS

EIA Case Size		X7R 1210											
Length (L)		3.20 ± 0.40											
Width (W)		2.50 ± 0.30											
Termination Width(P)		0.75 ± 0.25											
Capacitance Value	Capacitance Code	Working Voltage (VDC)											
		100V			250V			500V			1000V		
		DWV	DF (%)	T max. (mm)	DWV	DF (%)	T max. (mm)	DWV	DF (%)	T max. (mm)	DWV	DF (%)	T max. (mm)
100pF	101				425	2.5	1.35	650	2.5	1.35	1200	2.5	1.35
120pF	121				425	2.5	1.35	650	2.5	1.35	1200	2.5	1.35
150pF	151				425	2.5	1.35	650	2.5	1.35	1200	2.5	1.35
180pF	181				425	2.5	1.35	650	2.5	1.35	1200	2.5	1.35
220pF	221				425	2.5	1.35	650	2.5	1.35	1200	2.5	1.35
270pF	271				425	2.5	1.35	650	2.5	1.35	1200	2.5	1.35
330pF	331				425	2.5	1.35	650	2.5	1.35	1200	2.5	1.35
390pF	391				425	2.5	1.35	650	2.5	1.35	1200	2.5	1.35
470pF	471				425	2.5	1.35	650	2.5	1.35	1200	2.5	1.35
560pF	561				425	2.5	1.35	650	2.5	1.35	1200	2.5	1.35
680pF	681				425	2.5	1.35	650	2.5	1.35	1200	2.5	1.35
820pF	821				425	2.5	1.35	650	2.5	1.35	1200	2.5	1.35
1,000pF	102	250	2.5	1.05	425	2.5	1.05	650	2.5	1.35	1200	2.5	1.35
1,200pF	122	250	2.5	1.05	425	2.5	1.05	650	2.5	1.35	1200	2.5	1.35
1,500pF	152	250	2.5	1.05	425	2.5	1.05	650	2.5	1.35	1200	2.5	1.35
1,800pF	182	250	2.5	1.05	425	2.5	1.05	650	2.5	1.35	1200	2.5	1.35
2,200pF	222	250	2.5	1.05	425	2.5	1.05	650	2.5	1.35	1200	2.5	1.35
2,700pF	272	250	2.5	1.05	425	2.5	1.05	650	2.5	1.35	1200	2.5	1.35
3,300pF	332	250	2.5	1.05	425	2.5	1.05	650	2.5	1.35	1200	2.5	1.35
3,900pF	392	250	2.5	1.05	425	2.5	1.05	650	2.5	1.35	1200	2.5	1.80
4,700pF	472	250	2.5	1.05	425	2.5	1.05	650	2.5	1.35	1200	2.5	1.80
5,600pF	562	250	2.5	1.05	425	2.5	1.05	650	2.5	1.35	1200	2.5	1.80
6,800pF	682	250	2.5	1.05	425	2.5	1.05	650	2.5	1.35	1200	2.5	1.80
8,200pF	822	250	2.5	1.05	425	2.5	1.05	650	2.5	1.35	1200	2.5	1.80
10,000pF	103	250	2.5	1.05	425	2.5	1.05	650	2.5	1.35	1200	2.5	1.80
0.012µF	123	250	2.5	1.05	425	2.5	1.05	650	2.5	1.35			
0.015µF	153	250	2.5	1.05	425	2.5	1.05	650	2.5	1.35			
0.018µF	183	250	2.5	1.05	425	2.5	1.05	650	2.5	1.35			
0.022µF	223	250	2.5	1.05	425	2.5	1.05	650	2.5	1.35			
0.027µF	273	250	2.5	1.05	425	2.5	1.05						
0.033µF	333	250	2.5	1.05	425	2.5	1.05						
0.039µF	393	250	2.5	1.05	425	2.5	1.05						
0.047µF	473	250	2.5	1.05	425	2.5	1.35						
0.056µF	563	250	2.5	1.05									
0.068µF	683	250	2.5	1.05									
0.082µF	823	250	2.5	1.05									
0.10µF	104	250	2.5	1.05	425	2.5	1.45						
0.22µF	224	250	2.5	1.45									

(CONSULT FACTORY FOR CAPACITANCE VALUES NOT LISTED)

Packaging Code: (T max. >1.0mm): E = 7" Reel or for F = 13" reel

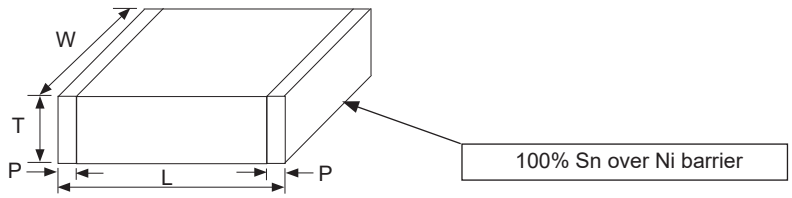

Downloaded from Arrow.com.

NMC-A Series
Surface Mount Automotive Grade Ceramic Chip Capacitors

AEC-Q200 QUALIFIED

ROHS/REACH COMPLIANT HALOGEN FREE

NIC COMPONENTS
Performance Passives By Design

X7R STANDARD VALUES AND SPECIFICATIONS

EIA Case Size		X7R 1812					
Length (L)		4.5 ± 0.40					
Width (W)		3.2 ± 0.40					
Termination Width(P)		0.50 ± 0.25					
Capacitance Value	Capacitance Code	Working Voltage (VDC)					
		50V			100V		
		DWV	DF (%)	T max. (mm)	DWV	DF (%)	T max. (mm)
0.47µF	474	125	2.5	1.80	250	2.5	1.80
1.0µF	105	125	2.5	1.80	250	2.5	1.80

(CONSULT FACTORY FOR CAPACITANCE VALUES NOT LISTED)

Packaging Code: (T max. >1.0mm): E = 7" Reel or for F = 13" reel

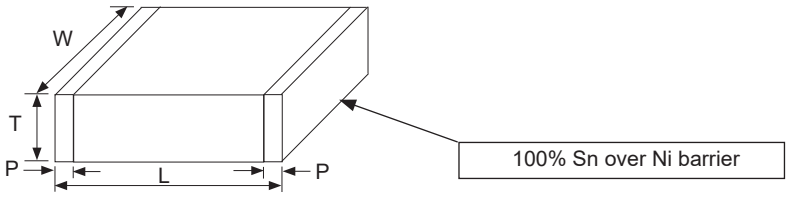

Downloaded from Arrow.com.

Reflow Soldering Profile

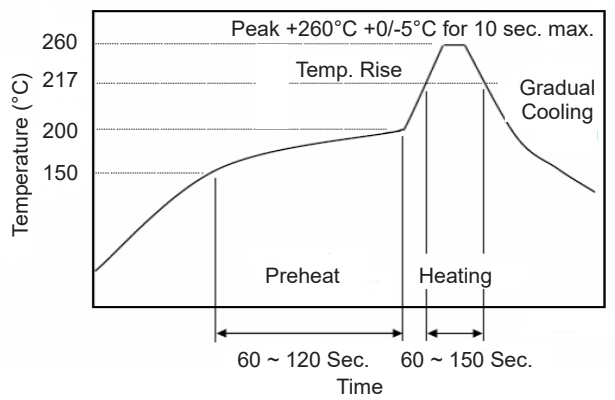

REEL QUANTITIES

Reel Size	0201	0402	0603	0805		1206				1210	1812
				T ≤ 0.95mm	T ≥ 1.0mm	T ≤ 0.95mm	T ≤ 1.35mm	T ≤ 1.80mm	T > 1.80mm	2.7mm max.	1.80 max.
7"	15K	10K	4K	4K	3K	4K	3K	2K	2K	3K	1K
13"	70K	50K	15K	15K	10K	15K	10K	10K	9K	10K	-

PUNCHED CARRIER TAPE DIMENSIONS (mm)

Type	A_o	B_o	W	F	E	P_1	P_0	D_0	t max.
0201	0.39 ± 0.07	0.69 ± 0.07	8.0 ± 0.10	3.5 ± 0.05	1.75 ± 0.05	2.0 ± 0.05	4.0 ± 0.10	1.55 ±0.05	0.50
0402	0.70 ± 0.20	1.20 ± 0.20				2.0 ± 0.05			0.80
0603	1.05 ± 0.30	1.80 ± 0.30				4.0 ± 0.10			1.30
0805	1.50 ± 0.20	2.30 ± 0.20							
1206	1.90 ± 0.30	3.50 ± 0.50							

0201/0402 CASE SIZE

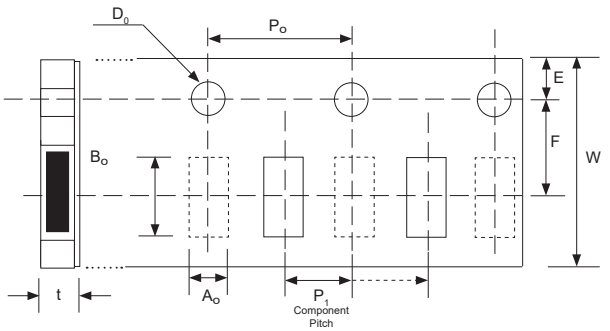

0603/0805 CASE SIZE

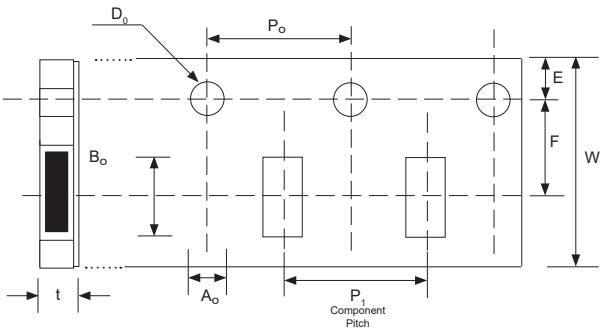

Downloaded from Arrow.com.

EMBOSSED PLASTIC CARRIER TAPE DIMENSIONS (mm)

Type	A_o	B_o	W	F	E	P1	P0	D0	t_1	t_2
0805	<1.80	<2.70	8.0 ± 0.30	3.5 ± 0.05	1.75 ± 0.10	4.0 ± 0.10	4.0 ± 0.10	1.50 +0.1/-0	0.23 ± 0.10	<2.50
1206	<2.30	<4.00								
1210	<3.05	<3.80								
1812	<3.75	<5.20	12.1 ± 0.20	5.5 ± 0.05	1.70 ± 0.10				-	<6.50

0805/1206/1210/1812 CASE SIZE

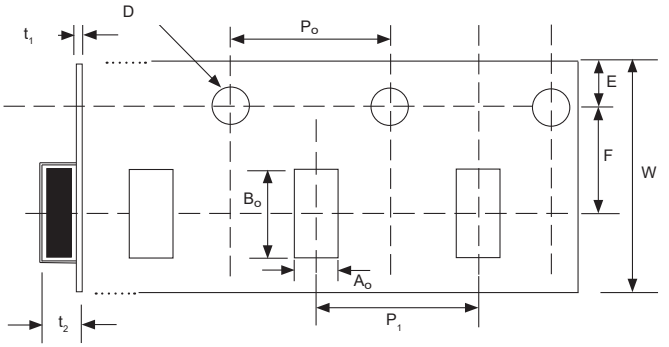

REEL

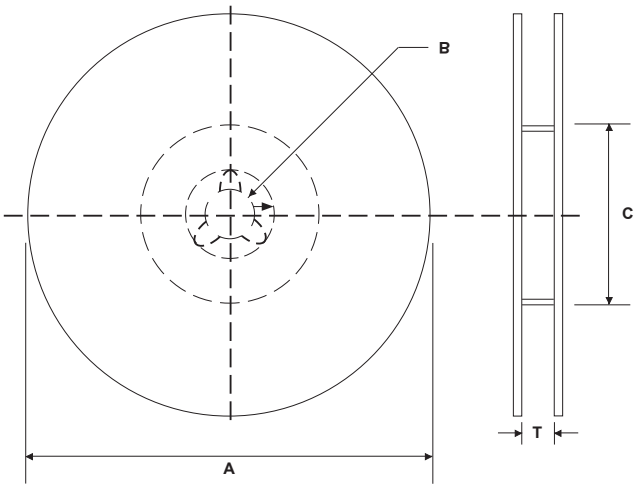

REEL DIMENSIONS (mm)

Reel Diameter (A)	B	C	T max.
7" (178 ± 0.1)	13.0 +0.5/-0.2	60.0 +1/-0	8.4 +1.5/-0
13" (330 ± 1.0)	13.0 +0.5/-0.2	100.0 ±1.0	8.4 +1.5/-0

CARRIER TAPE MATERIAL

Parts with a thickness of ≥1mm will be taped on embossed plastic carrier. Parts with a thickness of less then 1mm will be taped on punched carrier

Downloaded from Arrow.com.