TOSHIBA Bi-CMOS Integrated Circuit Silicon Monolithic

TB6641FG/FTG

Full-Bridge DC Motor Driver IC

The TB6641FG/FTG is a full-bridge DC motor driver with MOS output transistors.

The low ON-resistance MOS process and PWM control enables driving DC motors with high thermal efficiency.

Four operating modes are selectable via IN1 and IN2: clockwise (CW), counterclockwise (CCW), Short Brake and Stop.

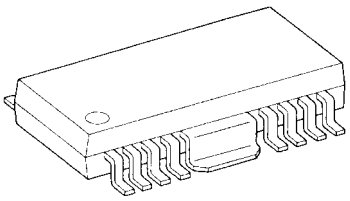

HSOP16-P-300-1.00

TB6641FG: Weight: 0.5 g (typ.)

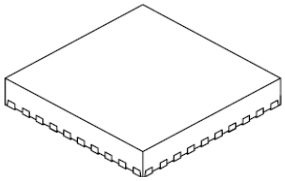

P-VQFN32-0505-0.50-002

TB6641FTG: Weight: 0.07 g (typ.)

Features

- Power supply voltage : 50 V (max)
- Output current : 4.5 A (max)
- Direct PWM control
- PWM constant-current control
- CW/CCW/Short Brake/Stop modes
- Overcurrent shutdown circuit (ISD)
- Overcurrent detection time control
- Overvoltage shutdown circuit (VSD)
- Thermal shutdown circuit (TSD)
- Undervoltage lockout circuit (UVLO)
- Dead time for preventing shoot-through current

© 2014 TOSHIBA Corporation

Downloaded from Arrow.com.

Block Diagram (application circuit example)

The application circuits shown in this document are provided for reference purposes only. Thorough evaluation is required, especially at the mass production design stage.

Toshiba does not grant any license to any industrial property rights by providing these examples of application circuits.

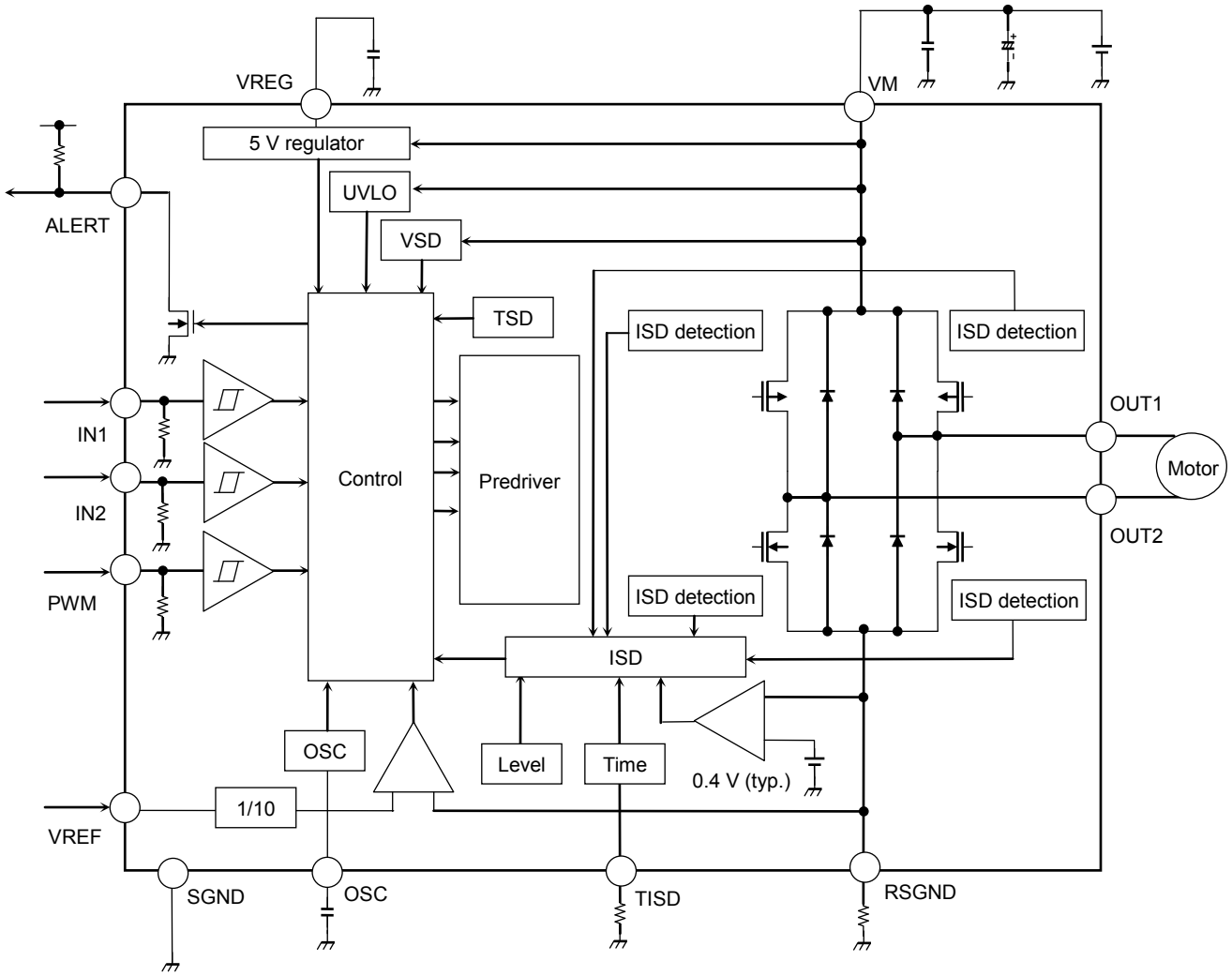

Downloaded from Arrow.com.

Pin Functions:TB6641FG

Pin No.	Pin Name	Functional Description
1	ALERT	Error detection output pin
2	OSC	Capacitor pin for controlling oscillation frequency for the PWM constant-current control
3	IN1	Control signal input pin 1
4	SGND	Small signal ground pin
5	IN2	Control signal input pin 2
6	N.C.	No-connect
7	OUT1	Output pin 1
8	RSGND	Power ground pin/ Detection resistor pin for PWM constant-current control
9	N.C.	No-connect
10	OUT2	Output pin 2
11	N.C.	No-connect
12	VM	Power supply voltage pin
13	VREG	Regulator output pin
14	TISD	Resistor pin for overcurrent detection time control
15	PWM	PWM input pin
16	VREF	Supply voltage pin for PWM constant-current control
—	FIN	Pin-fin heat sink (Note)

Note : Since the pin-fin is provided for discharging heat, the thermal design must be considered on the PCB designing. (The fin is installed on the second surface of the chip and electrified; therefore it must be insulated or earthed to the ground.)

Note 2: ESD test is not conducted on N.C.pins.

Pin Assignment (top view):TB6641FG

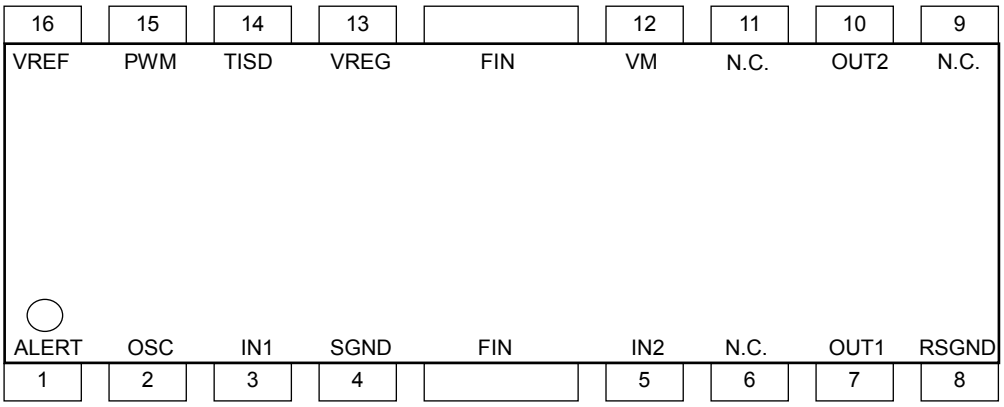

Downloaded from Arrow.com.

Pin Functions:TB6641FTG

Pin No.	Pin Name	Functional Description
1	OUT1	Output pin 1
2	OUT1	Output pin 1
3	N.C.	No-connect
4	RSGND	Power ground pin/ Detection resistor pin for PWM constant-current control
5	RSGND	Power ground pin/ Detection resistor pin for PWM constant-current control
6	N.C.	No-connect
7	OUT2	Output pin 2
8	OUT2	Output pin 2
9	N.C.	No-connect
10	N.C.	No-connect
11	VM	Power supply voltage pin
12	VM	Power supply voltage pin
13	N.C.	No-connect
14	N.C.	No-connect
15	VREG	Regulator output pin
16	N.C.	No-connect
17	TISD	Resistor pin for overcurrent detection time control
18	PWM	PWM input pin
19	VREF	Supply voltage pin for PWM constant-current control
20	N.C.	No-connect
21	N.C.	No-connect
22	ALERT	Error detection output pin
23	OSC	Capacitor pin for controlling oscillation frequency for the PWM constant-current control
24	IN1	Control signal input pin 1
25	N.C.	No-connect
26	SGND	Small signal ground pin
27	SGND	Small signal ground pin
28	N.C.	No-connect
29	N.C.	No-connect
30	N.C.	No-connect
31	IN2	Control signal input pin 2
32	N.C.	No-connect

Note 1: Design the pattern in consideration of the heat design because the back side has the role of heat radiation. (The back side should be connected to GND because it is connected to the back of the chip electrically.)

Note 2: Though each OUT1, RSGND, OUT2, VM, and SGND has two pins, short out these two pins at the external IC respectively.

Note 3: ESD test is not conducted on N.C.pins.

Downloaded from Arrow.com.

Pin Assignment (top view):TB6641FTG

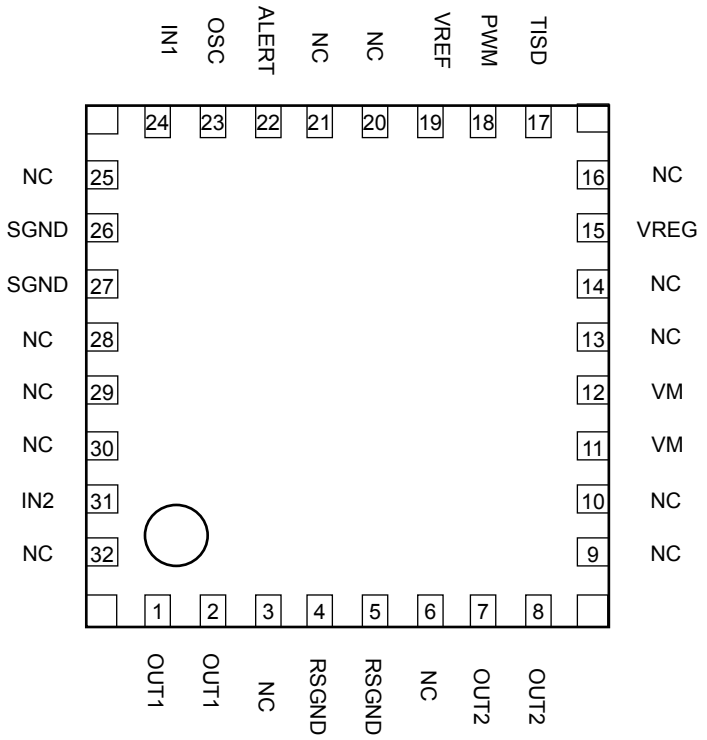

Downloaded from Arrow.com.

Absolute Maximum Ratings (Note) (Ta = 25°C)

Characteristics	Symbol	Rating	Unit
Power supply voltage	VM	50	V
Output voltage	V_O	50 (Note 1)	V
Output current 1	I_O peak1	4.5 (Note 2)	A
Output current 2	I_O peak2	4.0 (Note 3)	A
Input voltage	V_{IN}	- 0.3 to 5.5	V
ALERT pin output voltage	V_{ALERT}	5.5	V
ALERT pin output current	I_{ALERT}	5	mA
VREG pin output current	Ivreg	5	mA
Power dissipation (TB6641FG)	P_{D1}	0.89 (Note 4)	W
Power dissipation (TB6641FTG)	P_{D2}	3 (Note 5)	W
Operating temperature	T_{opr}	- 40 to 85	°C
Storage temperature	T_{stg}	- 55 to 150	°C

Note: The absolute maximum ratings of a semiconductor device are a set of ratings that must not be exceeded, even for a moment. Do not exceed any of these ratings.
Exceeding the rating (s) may cause the device breakdown, damage or deterioration, and may result injury by explosion or combustion.
Please use the TB6641FG/FTG within the specified operating ranges.

Note 1: OUT1, OUT2

Note 2: The absolute maximum output current rating of 4.5 A must be kept for OUT1 and OUT2 when VM ≤ 36 V.

Note 3: The absolute maximum output current rating of 4.0 A must be kept for OUT1 and OUT2 when VM >36 V.

Note 4: IC only

Note 5: On the PCB (Four layer board is based on JEDEC standard.)

Operating Ranges

Characteristics	Symbol	Rating	Unit
Supply voltage	VM_{opr}	10 to 45	V
OSC frequency	f_{osc}	Up to 500	kHz
VREF pin input voltage	$VREF_{opr}$	0 to 3.6	V
PWM frequency	f_{PWM}	Up to 100	kHz
Output current	I_O (Ave.)	Up to 1.5 (Note 6) (given as a guide)	A

Note 6: The average output current shall be increased or decreased depending on usage conditions such as ambient temperature and IC mounting method).
Use the average output current so that the junction temperature of 150°C (T_j) and the absolute maximum output current rating of 4.5 A or 4.0 A are not exceeded.

Downloaded from Arrow.com.

Electrical Characteristics (unless otherwise specified, Ta = 25°C, VM = 24 V)

Characteristics		Symbol	Test Condition	Min	Typ.	Max	Unit
Power supply current		I_{CC1}	Stop mode	—	3	8	mA
		I_{CC2}	CW/CCW mode	—	3	8	
		I_{CC3}	Short Brake mode	—	3	8	
Control circuit IN1 pin, IN2 pin, PWM pin	Input voltage	V_{INH}		2	—	5.5	V
		V_{INL}		0	—	0.8	
	Hysteresis voltage	$V_{IN\ (HYS)}$		—	0.4	—	
	Input current	I_{INH}	V_{IN} = 5 V	—	50	75	μA
		I_{INL}	V_{IN} = 0 V	—	—	5	
VREF pin input current		I_{INVREF}		- 3	—	3	μA
Constant-current control amplifier offset		V_{OFFSET}	RSGND = VREF	—	1	—	mV
PWM frequency		f_{PWM}	Duty: 50 %	—	100	—	kHz
PWM minimum pulse width		$f_{PWM\ (TW)}$	(given as a guide only)	1	—	—	μs
OUT1 pin, OUT2 pin	Output ON resistance	$R_{ON\ (U+L)}$	I_O = 3 A	—	0.55	0.9	Ω
	Output leakage current	$I_{L\ (U)}$	VM = 50 V, V_{OUT} = 0 V	- 2	—	—	μA
		$I_{L\ (L)}$	VM = V_{OUT} = 50 V	—	—	2	
	Diode forward voltage	$V_{F\ (U)}$	I_O = 3 A	—	1.3	1.7	V
		$V_{F\ (L)}$	I_O = - 3 A	—	1.3	1.7	
ALERT pin	Output fall time voltage	$V_{AL\ (LO)}$	I_{ALERT} = 1 mA	—	—	0.4	V
	Output leakage current	$I_{AL\ (LE)}$	V_{ALERT} = 5.5 V	—	—	2	μA
OSC charge/discharge current		I_{OSC}		0.3	0.5	0.7	mA
VREG pin output voltage		Vvreg	VREG= - 5mA	4.5	5	5.5	V

Downloaded from Arrow.com.

Thermal Performance Characteristics

▪ TB6641FG

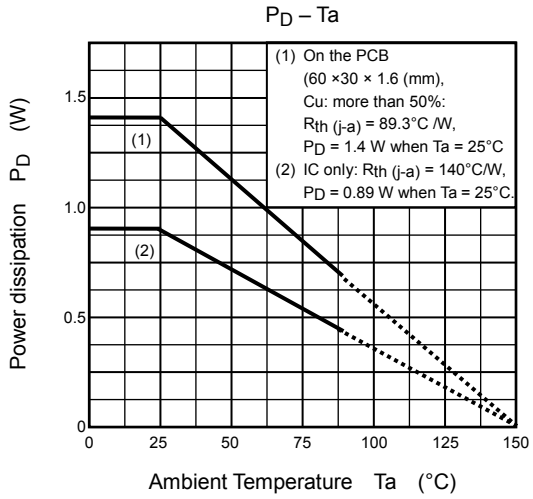

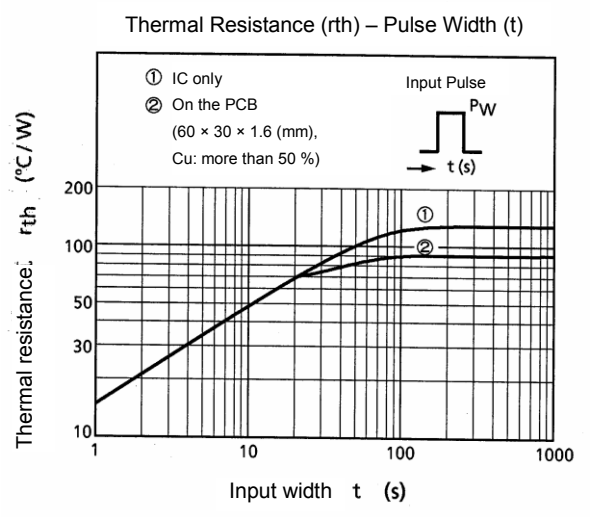

▪ TB6641FTG

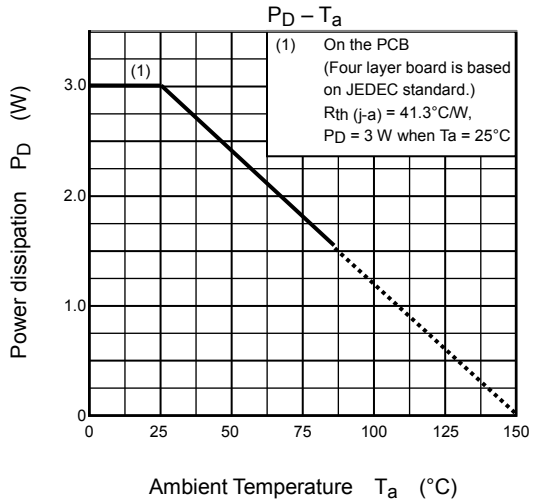

Downloaded from Arrow.com.

I/O Equivalent Circuits

The equivalent circuit diagrams may be simplified or some parts of them may be omitted for explanatory purposes.

Pin name (Pin No. /TB6641FG)	I/O Signal	I/O Internal Circuit
IN1 (3) IN2 (5)	Digital input L: 0.8 V (max) H: 2 V (min)	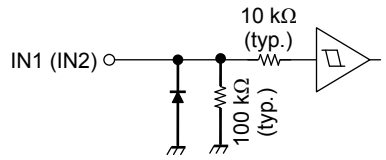
PWM (15)	Digital input L: 0.8 V (max) H: 2 V (min)	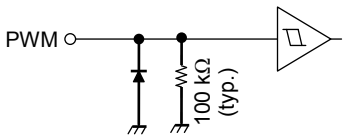
VREF (16)	Analog input Input range: 0 V to 3.6 V	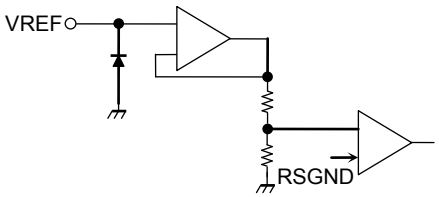
ALERT (1)	Open-drain output An externally attached pull-up resistor enables the High output. H (High-impedance): Abnormal operation (When the UVLO, TSD, VSD and/or ISD is activated) L: Normal operation	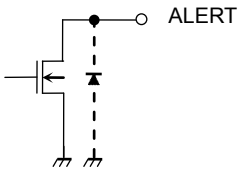
OSC (2)	The pin connects a capacitor for controlling the oscillation frequency used in the PWM constant-current control. The oscillation frequency of the oscillator is approximated by the following formula: fosc = 0.42/(Cosc [F] × 10^3) = [Hz] (typ.)	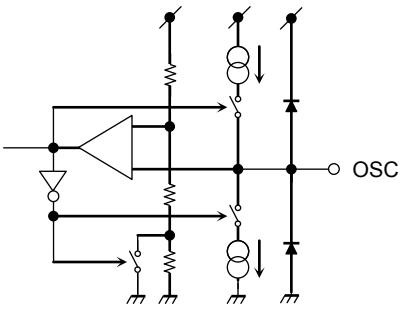
VREG (13)	Regulator output pin 5V(typ.)	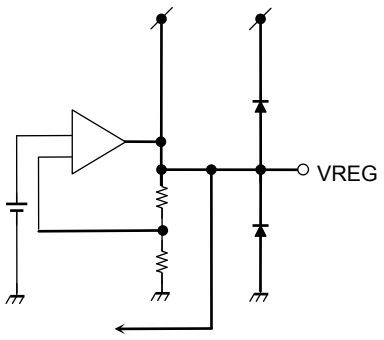

Downloaded from Arrow.com.

Pin name (Pin No. /TB6641FG)	I/O Signal	I/O Internal Circuit
TISD (14)	The pin connects a resistor controlling overcurrent detection time.	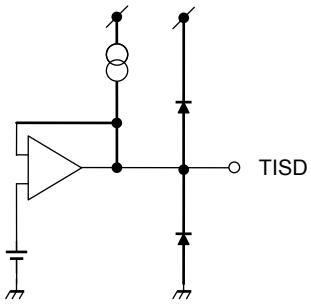
OUT1 (7) OUT2 (10) RSGND (8)	The RSGND pin must be connected to a resistor for detection when it is used in the PWM constant-current control; it must be earthed to the ground, otherwise. Utmost care must be taken for designing the pin-arrangement pattern because a large current flows through these pins.	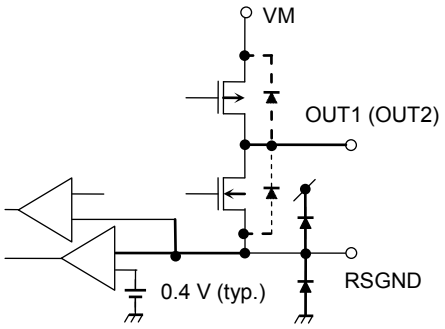

Functional Description

The equivalent circuit diagrams may be simplified or some parts of them may be omitted for explanatory purposes.

Timing charts may be simplified for explanatory purposes.

1. Input/Output Functions

Input			Output		
IN1	IN2	PWM	OUT1	OUT2	Mode
H	H	H	L	L	Short brake
		L	L	L	
L	H	H	L	H	CW/CCW
		L	L	L	Short brake
H	L	H	H	L	CCW/CW
		L	L	L	Short brake
L	L	H	OFF (Hi-Z)		Stop (a release of TSD and/or ISD)
		L			

2. Protective Operation Alert Output (ALERT)

The ALERT pin behaves as an open-drain output and provides a high-impedance state on output being pulled up by a resistor externally wired.

The output is Low when the TB6641FG/FTG performs a normal operation (in which state the operational mode is selectable through the IN1 pin and IN2 pin among CW, CCW, Short Brake and Stop modes.).

In any other cases (in which state the thermal shutdown circuit (TSD), overcurrent shutdown circuit (ISD), overvoltage shutdown circuit (VSD) and/or undervoltage lockout (UVLO) is activated), the output is High.

Driving both the IN1 pin and IN2 pin Low allows a release of the shutdown operations; the TB6641FG/FTG resumes the normal operations.

Downloaded from Arrow.com.

3. Undervoltage Lockout Circuit (UVLO)

The TB6641FG/FTG incorporates an undervoltage lockout circuit. When the supply voltage drops under 8 V (typ.), all the outputs are turned off (Hi-Z).
The UVLO circuit has a hysteresis of 0.7 V (typ.); the TB6641FG/FTG resumes the normal operation at 8.7 V (typ.).

UVLO operation

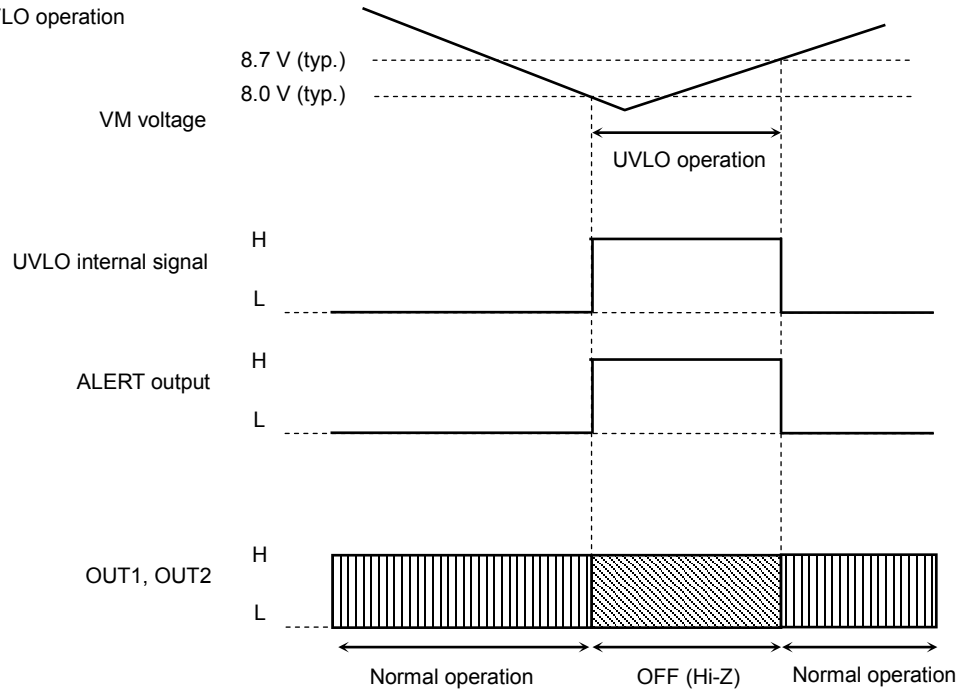

4. Overvoltage Shutdown Circuit (VSD)

The TB6641FG/FTG incorporates an overvoltage shutdown circuit. If the supply voltage exceeds 53 V (typ.), all the outputs are turned off (Hi-Z).
The VSD circuit has a hysteresis of 3 V (typ.); the TB6641FG/FTG resumes the normal operation at 50 V (typ.).

VSD operation

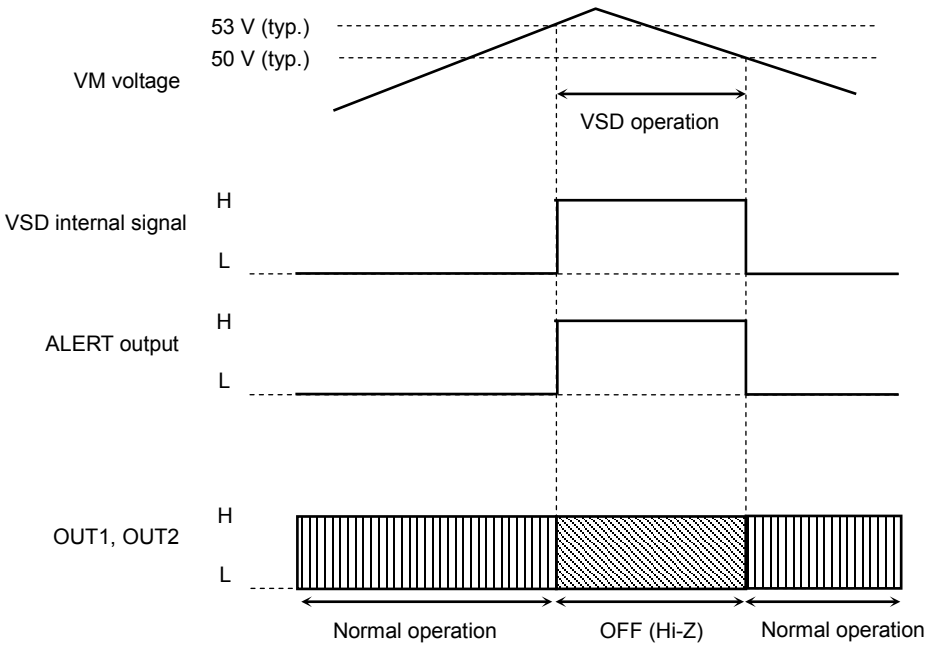

Note: The VSD circuit is activated if the absolute maximum voltage rating is violated. Note that the circuit is provided as an auxiliary only and does not necessarily provide the IC with a perfect protection from any kind of damages.

Downloaded from Arrow.com.

5. Thermal Shutdown Circuit (TSD)

The TB6641FG/FTG incorporates a thermal shutdown circuit. If the junction temperature (T_j) exceeds 170°C (typ.), all the outputs are turned off (Hi-Z).
Driving both the IN1 pin and IN2 pin Low allows a release of the shutdown operation; the TB6641FG/FTG resumes the normal operation.

TSD = 170°C (typ.)

TSD operation

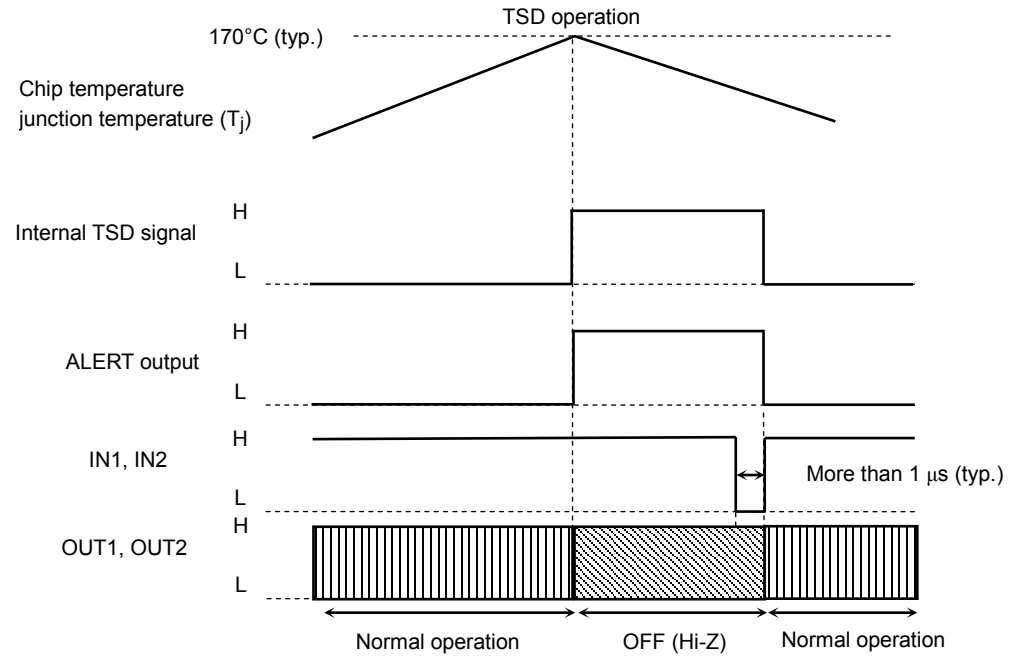

Note: The TSD circuit is activated if the absolute maximum junction temperature rating (T_j) of 150°C is violated. Note that the circuit is provided as an auxiliary only and does not necessarily provide the IC with a perfect protection from any kind of damages.

Downloaded from Arrow.com.

6. Overcurrent Shutdown Circuit (ISD)

The TB6641FG/FTG incorporates overcurrent shutdown (ISD) circuits monitoring the current that flows through each of all the four output power transistors.
The detection current threshold is 7A (typ.). If the overcurrent flowing through any one of the ISD circuit flows beyond the detected time threshold, all the outputs are turned off (Hi-Z).
The detection time threshold is controllable through the external resistor of the TISD pin.
Driving both the IN1 pin and IN2 pin Low allows a release of the shutdown operations; the TB6641FG/FTG resumes the normal operation.

- Detection time threshold of the external resistor, R1, of the TISD pin
  10 kΩ: 1.6 μs (typ.)
  20 kΩ: 2.8 μs (typ.)
  100 kΩ: 12.4 μs (typ.)

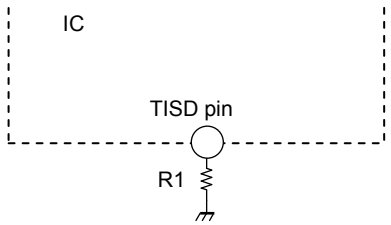

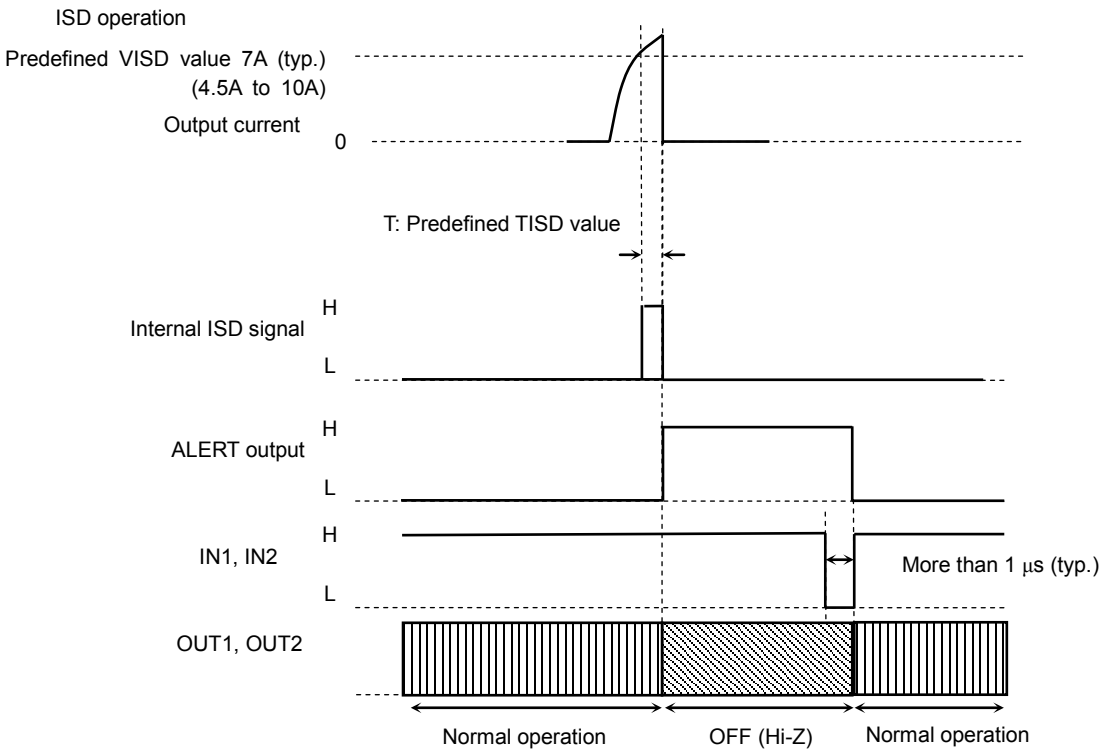

Note: The ISD circuit is activated if the absolute maximum current rating is violated. Note that the circuit is provided as an auxiliary only and does not necessarily provide the IC with a perfect protection from damages due to overcurrent caused by power fault, ground fault, load-short and the like.

Downloaded from Arrow.com.

7. Direct PWM Control

The motor rotation speed is controllable by the PWM input sent through the PWM pin.
It is also possible to control the motor rotation speed by sending in the PWM signal through not the PWM pin but the IN1 and IN2 pins.
When the motor drive is controlled by the PWM input, the TB6641FG/FTG repeats operating in Normal Operation mode and Short Brake mode alternately.
For preventing the shoot-through current in the output circuit caused by the upper and lower power transistors being turned on simultaneously, the dead time is internally generated at the time the upper and lower power transistors switches between on and off.
This eliminates the need of inserting Off time externally; thus the PWM control with synchronous rectification is enabled.
Note that inserting Off time externally is not required on operation mode changes between CW and CCW, and CW (CCW) and Short Brake, again, because of the dead time generated internally.

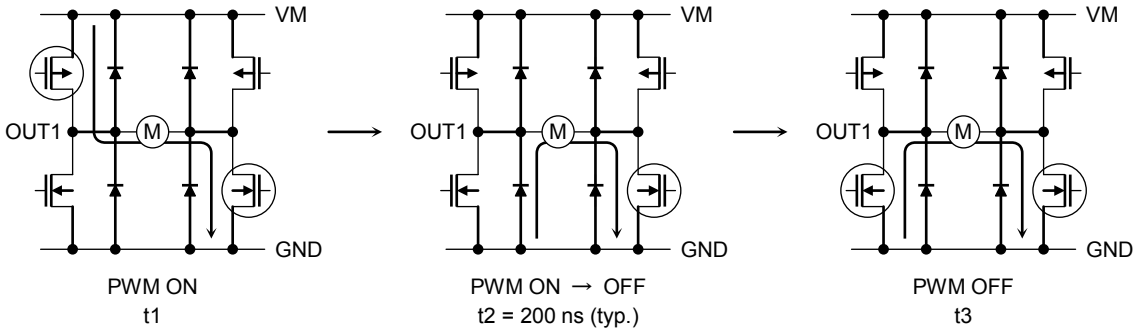

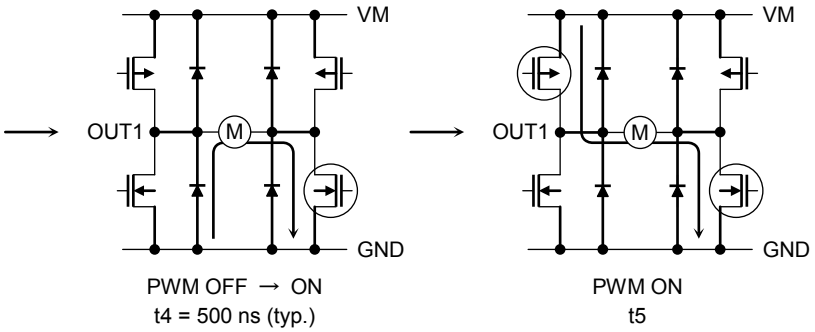

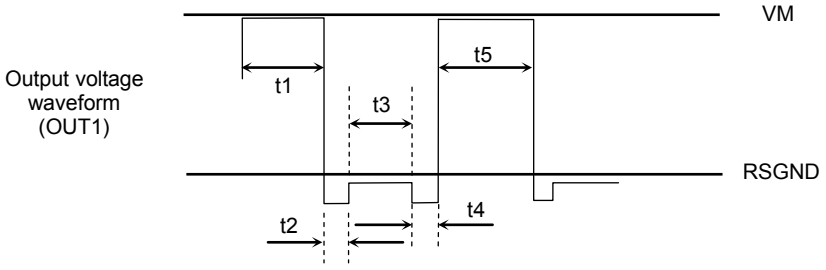

Downloaded from Arrow.com.

8. Output Circuit

The switching characteristics of the output transistors of the OUT1 and OUT2 pins are as shown below:

Characteristic	Value	Unit
t_{pLH}	650 (typ.)	ns
t_{pHL}	450 (typ.)	
t_r	90 (typ.)	
t_f	130 (typ.)	

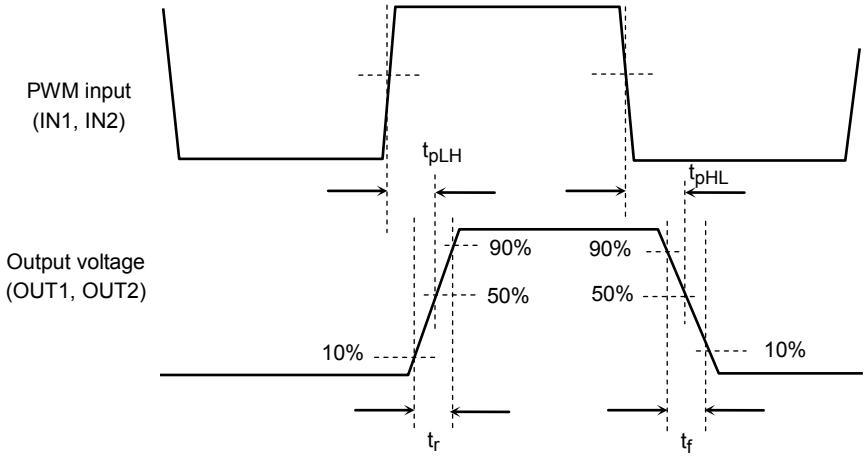

Downloaded from Arrow.com.

9. PWM Constant-Current Control

The TB6641FG/FTG uses a peak current detection technique to keep the output current constant by applying constant voltage through the VREF pin. When running in Discharge mode, the TB6641FG/FTG powers the motor to operate in Short Brake mode.

(1) PWM constant-current control programming

The peak current upon the constant-current operation is determined by applying voltage on the VREF pin. The peak current value is calculated by the following equation:

$$I_O = VREF/R \times 1/10 \ [A]$$

The PWM current-constant frequency is also programmable by using the capacitor of the OSC pin. The oscillation frequency is approximated by using the following equation:

$$fosc = 0.42/(Cosc \ [F] \times 10^3) = [Hz] \ (typ.)$$

For preventing the overvoltage on connecting a detection resistor, the RSGND pin is driven High (the outputs are turned off (Hi-Z)) when the applied voltage is over 0.4 V (typ.). The subsequent control of the RSGND is the same as the ISD circuit. The ALERT pin is also driven High. However, when the IN1 and IN2 pins are pulled Low, the ALERT pin is pulled Low and the TB6641FG/FTG resumes the normal operation.

It is recommended to use a detection resistor of over 0.1 Ω for the RSGND pin.

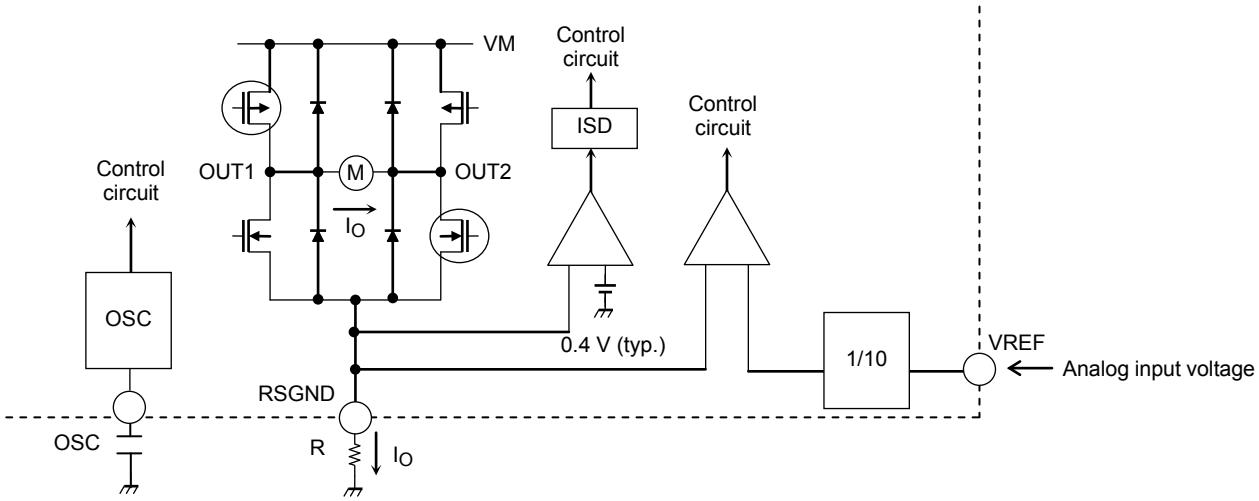

Downloaded from Arrow.com.

(2) Constant-current chopping

The TB6641FG/FTG enters Discharge mode when V_{RSGND} reaches the predetermined voltage (VREF/10).

After a lapse of four internal clocks generated by the OSC signal, the TB6641FG/FTG shifts to Charge mode.

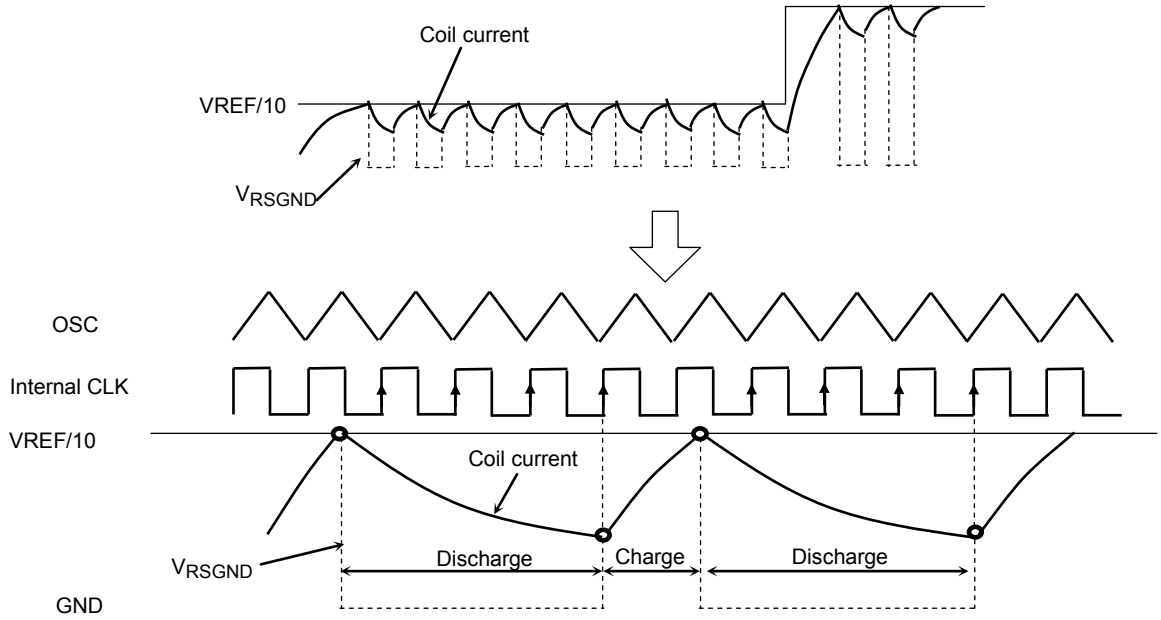

Downloaded from Arrow.com.

(3) Operation on change of predetermined current value (when in Discharge mode)
The TB6641FG/FTG enters Discharge mode as V_{RSGND} reaches the predetermined voltage (VREF/10) and then transits to Charge mode after four internal clocks. However, if V_{RSGND} > VREF/10 at the time, the TB6641FG/FTG goes back to Discharge mode. If V_{RSGND} > VREF/10 after another four internal clocks, then the TB6641FG/FTG enters Charge mode and stays until V_{RSGND} reaches VREF/10.

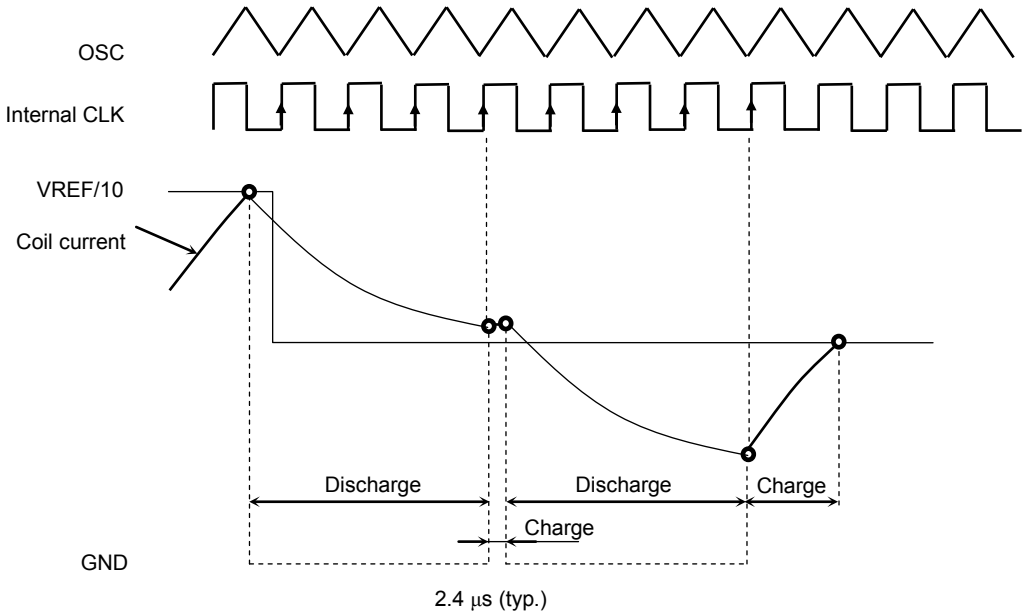

(4) Operation on change of predetermined current value (when in Charge mode)
Even though VREF reaches the predetermined current value, Discharge mode continues for four internal clocks after that. And then Charge mode is entered.

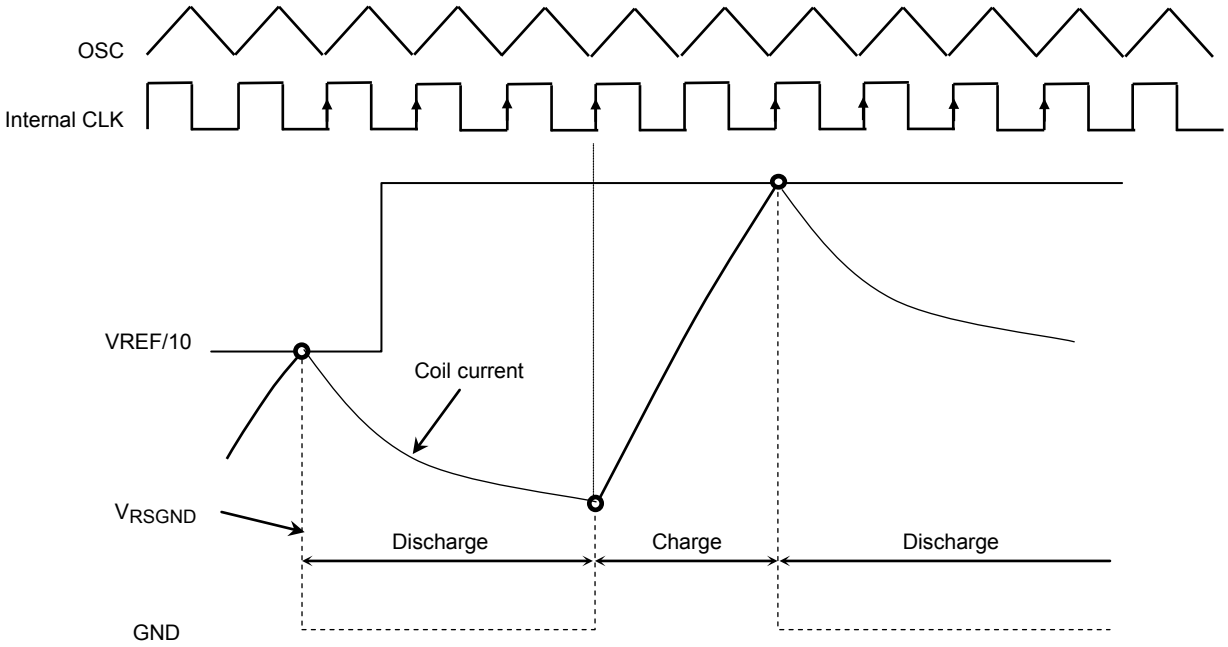

Due to the peak current detection technique, the average current value of the constant-current operation shall be smaller than the predetermined value. Because this depends on characteristics of used motor coils, precise identification of the used motor coils must be performed when determining the current value.
When both the PWM constant-current control and the direct PWM control (applying the PWM input on the PWM pin, or on the IN1 and IN2 pins), Short Brake mode is preferentially selected.

Downloaded from Arrow.com.

Package Dimensions

TB6641FG

HSOP16-P-300-1.00 Unit: mm

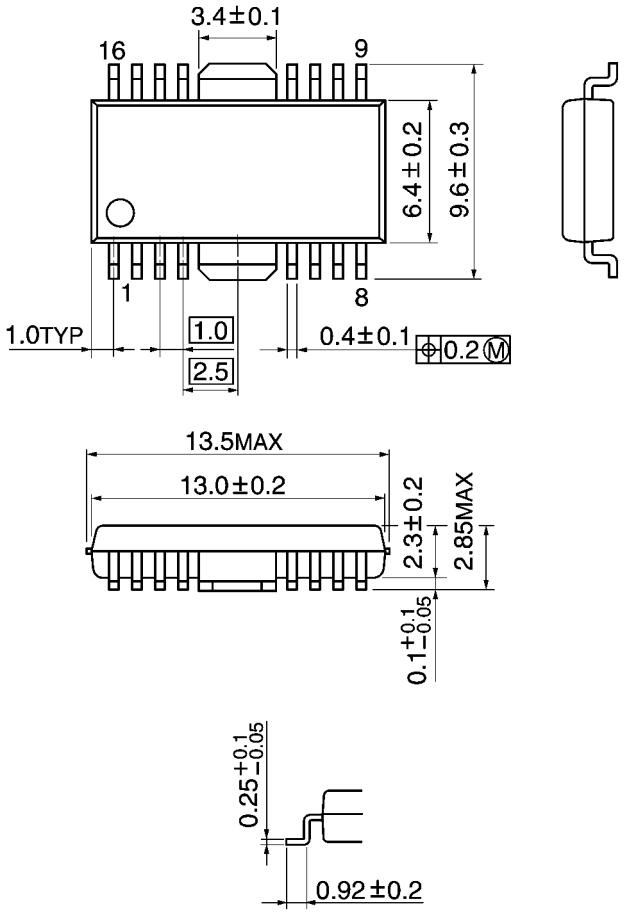

Weight: 0.5 g (typ.)

Downloaded from Arrow.com.

TB6641FTG

P-VQFN32-0505-0.50-002

Unit: mm

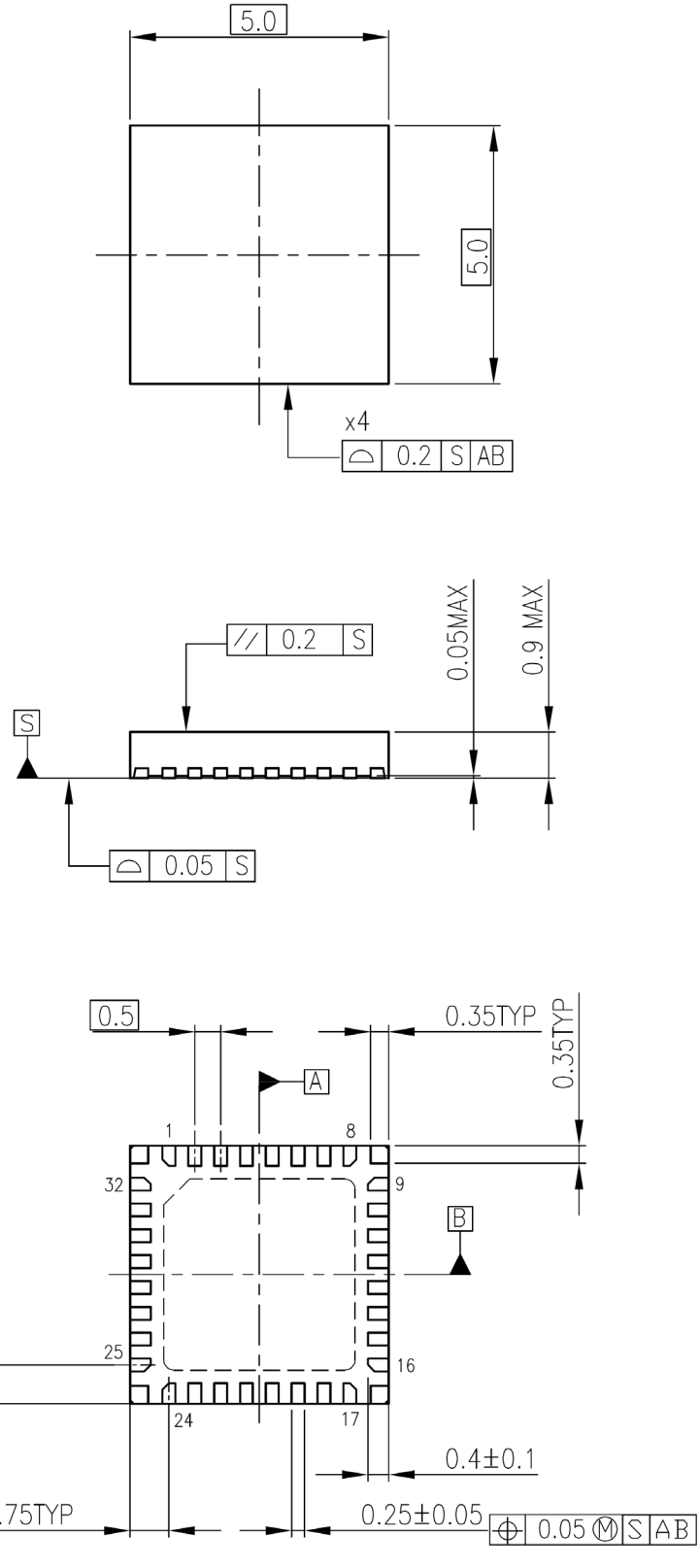

Weight: 0.07 g (typ.)

Downloaded from Arrow.com.

Notes on Contents

1. Block Diagrams

Some of the functional blocks, circuits, or constants in the block diagram may be omitted or simplified for explanatory purposes.

2. Equivalent Circuits

The equivalent circuit diagrams may be simplified or some parts of them may be omitted for explanatory purposes.

3. Timing Charts

Timing charts may be simplified for explanatory purposes.

4. Application Circuits

The application circuits shown in this document are provided for reference purposes only. Thorough evaluation is required, especially at the mass production design stage.
Toshiba does not grant any license to any industrial property rights by providing these examples of application circuits.

5. Test Circuits

Components in the test circuits are used only to obtain and confirm the device characteristics. These components and circuits are not guaranteed to prevent malfunction or failure from occurring in the application equipment.

IC Usage Considerations

Notes on Handling of ICs

(1) The absolute maximum ratings of a semiconductor device are a set of ratings that must not be exceeded, even for a moment. Do not exceed any of these ratings.
Exceeding the rating(s) may cause the device breakdown, damage or deterioration, and may result injury by explosion or combustion.

(2) Use an appropriate power supply fuse to ensure that a large current does not continuously flow in case of over current and/or IC failure. The IC will fully break down when used under conditions that exceed its absolute maximum ratings, when the wiring is routed improperly or when an abnormal pulse noise occurs from the wiring or load, causing a large current to continuously flow and the breakdown can lead smoke or ignition. To minimize the effects of the flow of a large current in case of breakdown, appropriate settings, such as fuse capacity, fusing time and insertion circuit location, are required.

(3) If your design includes an inductive load such as a motor coil, incorporate a protection circuit into the design to prevent device malfunction or breakdown caused by the current resulting from the inrush current at power ON or the negative current resulting from the back electromotive force at power OFF. IC breakdown may cause injury, smoke or ignition.
Use a stable power supply with ICs with built-in protection functions. If the power supply is unstable, the protection function may not operate, causing IC breakdown. IC breakdown may cause injury, smoke or ignition.

(4) Do not insert devices in the wrong orientation or incorrectly.
Make sure that the positive and negative terminals of power supplies are connected properly. Otherwise, the current or power consumption may exceed the absolute maximum rating, and exceeding the rating(s) may cause the device breakdown, damage or deterioration, and may result injury by explosion or combustion.
In addition, do not use any device that is applied the current with inserting in the wrong orientation or incorrectly even just one time.

Downloaded from Arrow.com.

Points to Remember on Handling of ICs

(1) Over Current Protection Circuit

Over current protection circuits (referred to as current limiter circuits) do not necessarily protect ICs under all circumstances. If the Over current protection circuits operate against the over current, clear the over current status immediately.

Depending on the method of use and usage conditions, such as exceeding absolute maximum ratings can cause the over current protection circuit to not operate properly or IC breakdown before operation. In addition, depending on the method of use and usage conditions, if over current continues to flow for a long time after operation, the IC may generate heat resulting in breakdown.

(2) Thermal Shutdown Circuit

Thermal shutdown circuits do not necessarily protect ICs under all circumstances. If the thermal shutdown circuits operate against the over temperature, clear the heat generation status immediately. Depending on the method of use and usage conditions, such as exceeding absolute maximum ratings can cause the thermal shutdown circuit to not operate properly or IC breakdown before operation.

(3) Heat Radiation Design

In using an IC with large current flow such as power amp, regulator or driver, please design the device so that heat is appropriately radiated, not to exceed the specified junction temperature (T_j) at any time and condition. These ICs generate heat even during normal use. An inadequate IC heat radiation design can lead to decrease in IC life, deterioration of IC characteristics or IC breakdown. In addition, please design the device taking into considerate the effect of IC heat radiation with peripheral components.

(4) Back-EMF

When a motor rotates in the reverse direction, stops or slows down abruptly, a current flow back to the motor's power supply due to the effect of back-EMF. If the current sink capability of the power supply is small, the device's motor power supply and output pins might be exposed to conditions beyond absolute maximum ratings. To avoid this problem, take the effect of back-EMF into consideration in system design.

Downloaded from Arrow.com.

RESTRICTIONS ON PRODUCT USE

- Toshiba Corporation, and its subsidiaries and affiliates (collectively "TOSHIBA"), reserve the right to make changes to the information in this document, and related hardware, software and systems (collectively "Product") without notice.
- This document and any information herein may not be reproduced without prior written permission from TOSHIBA. Even with TOSHIBA's written permission, reproduction is permissible only if reproduction is without alteration/omission.
- Though TOSHIBA works continually to improve Product's quality and reliability, Product can malfunction or fail. Customers are responsible for complying with safety standards and for providing adequate designs and safeguards for their hardware, software and systems which minimize risk and avoid situations in which a malfunction or failure of Product could cause loss of human life, bodily injury or damage to property, including data loss or corruption. Before customers use the Product, create designs including the Product, or incorporate the Product into their own applications, customers must also refer to and comply with (a) the latest versions of all relevant TOSHIBA information, including without limitation, this document, the specifications, the data sheets and application notes for Product and the precautions and conditions set forth in the "TOSHIBA Semiconductor Reliability Handbook" and (b) the instructions for the application with which the Product will be used with or for. Customers are solely responsible for all aspects of their own product design or applications, including but not limited to (a) determining the appropriateness of the use of this Product in such design or applications; (b) evaluating and determining the applicability of any information contained in this document, or in charts, diagrams, programs, algorithms, sample application circuits, or any other referenced documents; and (c) validating all operating parameters for such designs and applications. **TOSHIBA ASSUMES NO LIABILITY FOR CUSTOMERS' PRODUCT DESIGN OR APPLICATIONS.**
- **PRODUCT IS NEITHER INTENDED NOR WARRANTED FOR USE IN EQUIPMENTS OR SYSTEMS THAT REQUIRE EXTRAORDINARILY HIGH LEVELS OF QUALITY AND/OR RELIABILITY, AND/OR A MALFUNCTION OR FAILURE OF WHICH MAY CAUSE LOSS OF HUMAN LIFE, BODILY INJURY, SERIOUS PROPERTY DAMAGE AND/OR SERIOUS PUBLIC IMPACT ("UNINTENDED USE").** Except for specific applications as expressly stated in this document, Unintended Use includes, without limitation, equipment used in nuclear facilities, equipment used in the aerospace industry, Class 3 medical devices, equipment used for automobiles, and military vehicles and munitions. **IF YOU USE PRODUCT FOR UNINTENDED USE, TOSHIBA ASSUMES NO LIABILITY FOR PRODUCT.** For details, please contact your TOSHIBA sales representative or contact us via our website.
- Do not disassemble, analyze, reverse-engineer, alter, modify, translate or copy Product, whether in whole or in part.
- Product shall not be used for or incorporated into any products or systems whose manufacture, use, or sale is prohibited under any applicable laws or regulations.
- The information contained herein is presented only as guidance for Product use. No responsibility is assumed by TOSHIBA for any infringement of patents or any other intellectual property rights of third parties that may result from the use of Product. No license to any intellectual property right is granted by this document, whether express or implied, by estoppel or otherwise.
- **ABSENT A WRITTEN SIGNED AGREEMENT, EXCEPT AS PROVIDED IN THE RELEVANT TERMS AND CONDITIONS OF SALE FOR PRODUCT, AND TO THE MAXIMUM EXTENT ALLOWABLE BY LAW, TOSHIBA (1) ASSUMES NO LIABILITY WHATSOEVER, INCLUDING WITHOUT LIMITATION, INDIRECT, CONSEQUENTIAL, SPECIAL, OR INCIDENTAL DAMAGES OR LOSS, INCLUDING WITHOUT LIMITATION, LOSS OF PROFITS, LOSS OF OPPORTUNITIES, BUSINESS INTERRUPTION AND LOSS OF DATA, AND (2) DISCLAIMS ANY AND ALL EXPRESS OR IMPLIED WARRANTIES AND CONDITIONS RELATED TO SALE, USE OF PRODUCT, OR INFORMATION, INCLUDING WARRANTIES OR CONDITIONS OF MERCHANTABILITY, FITNESS FOR A PARTICULAR PURPOSE, ACCURACY OF INFORMATION, OR NONINFRINGEMENT.**
- Do not use or otherwise make available Product or related software or technology for any military purposes, including without limitation, for the design, development, use, stockpiling or manufacturing of nuclear, chemical, or biological weapons or missile technology products (mass destruction weapons). Product and related software and technology may be controlled under the applicable export laws and regulations including, without limitation, the Japanese Foreign Exchange and Foreign Trade Law and the U.S. Export Administration Regulations. Export and re-export of Product or related software or technology are strictly prohibited except in compliance with all applicable export laws and regulations.
- Please contact your TOSHIBA sales representative for details as to environmental matters such as the RoHS compatibility of Product. Please use Product in compliance with all applicable laws and regulations that regulate the inclusion or use of controlled substances, including without limitation, the EU RoHS Directive. **TOSHIBA ASSUMES NO LIABILITY FOR DAMAGES OR LOSSES OCCURRING AS A RESULT OF NONCOMPLIANCE WITH APPLICABLE LAWS AND REGULATIONS.**

Downloaded from Arrow.com.