MOD	Description	Please follow Pulse Limits for the hazardous substances (RoHS, halogens) in the document "Pulse Hazardous Substances (HS) Limits (RPGE002-03)" and "Vendor Survey Questionnaire, Material Composition (LDM-SAF-L0040)".	Reliability Test Spec accorinding to WIHS7.5.33 (Reliability Test Working Instruction) Default test standard is Test Standard A if no definition
P2	Change the Logo		

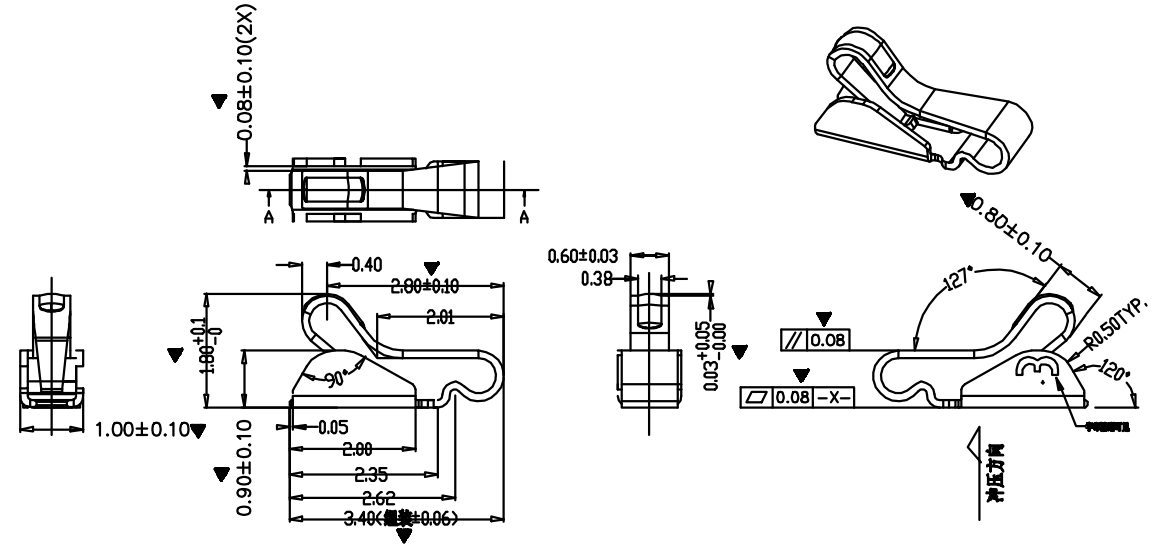

备注:

1.材质: HKT322-EH 0.12*15.00mm(T*W);

2.接触阻抗: 50MΩ MAX;

3.图面未标注的R角/尖角按照R0.20mm管控;

4.端子毛刺不超过0.03mm;

5.标注▼为重点检验尺寸,CPK为CPK尺寸,首批批量交货需做MiniCPK,CPK值 ≥1.33,每次交货需附尺寸检验报告

6.机械性能:端子触点以20mm每分钟速度下压0.40mm ,正向力0.60N MIN.;下压0.60mm ,正向力1.10~2.00N;端子下压0.65mm,耐久1000次,力量衰减不超过10%(量产品不超过20%)。

7.端子电镀规格:接触区域镀金10u" MIN.
焊接区域镀金3 u" MIN.
底材基体镀Ni 50u" MIN.

8.环境要求:盐雾测试要求:接触区域满足24H,其它区域8H(无氧化、脱皮、生锈,20X放大镜检观察)
电镀后表面覆盖率达到95%以上,将产品焊接在PCB板上,
用拉力计测拔及从用脚平推将其推掉,其拔力需>3.0Kgf/pin;
焊接IR后,产品无变色、起泡、脱皮等不良现象.

9.包装: T&R包装

10.其它: 产品符合HSF标准

11.冲制-电镀-烘烤-包装-(SMT).

12.冲压模号: MJ-287,单片印"3"字以示区分.

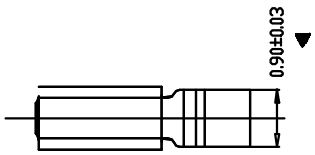

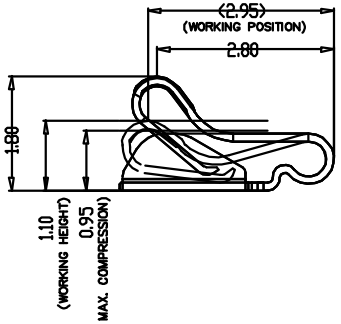

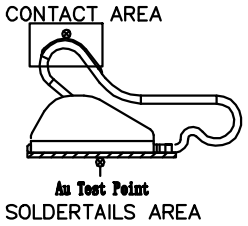

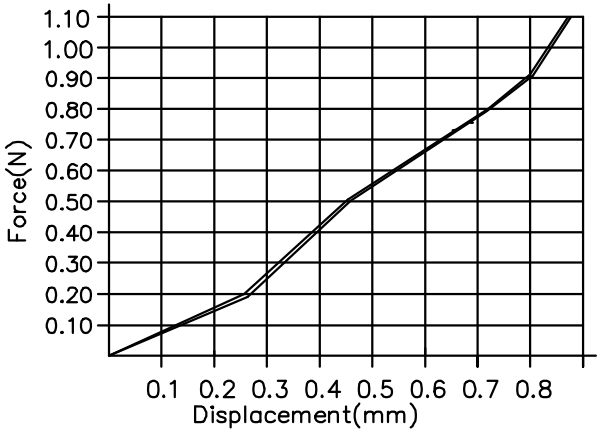

Confidential
This is a proprietary information of Pulse Suzhou.
No reporduction/copying is allowed without permission.

Functional Characteristics Key (Cpk requirement : Cpk))
◊ Process Capability Studies required(total pcs)
♦ Ongoing Statistical Process Control Required (total pcs)
– Critical dimension need to be measured, no CPK requirement (total pcs)

.X± 0.15	
.XX± 0.10	
.XXX±0.05	
X.°± 5°	

PULSE (SUZHOU) WIRELESS PRODUCTS CO.LTD.
Pulse A YAGEO Company
99 HUOJU RD. SUZHOU
NEW DISTRICT
215009
P.R.CHINA

PRODUCT(S)
SW0178N

ITEM
TX16056-001(CLIP)

THIRD ANGLE PROJECTION

SHEET NUMBER		1 / 1			
GENERAL TOLERANCE					
CUSTOMER NUMBER					
SCALE 4.000	DESIGN	JACKIE	JUN-28-18		
	CHECKED	MARK	Nov-22-17		
	APPROVED	JAMES	Nov-22-17		

DOCUMENT NUMBER	PART VERSION	DOCUMENT VERSION	MOD	DATE	NAME
SW0178N	P01	P2	P2	March-07-19	CHRIS
			P1	JUN-28-18	JACKIE

Downloaded from Arrow.com.