THIS DRAWING IS UNPUBLISHED. RELEASED FOR PUBLICATION 2000
© COPYRIGHT 2000 BY TYCO ELECTRONICS CORPORATION. ALL RIGHTS RESERVED.

LOC	DIST
A1	-

REVISIONS

P	LTR	DESCRIPTION	DATE	DWN	APVD
	B2	RELEASED AS PER ECR-09-005170	05.MAR.2009	GG	TS

PN 1-2

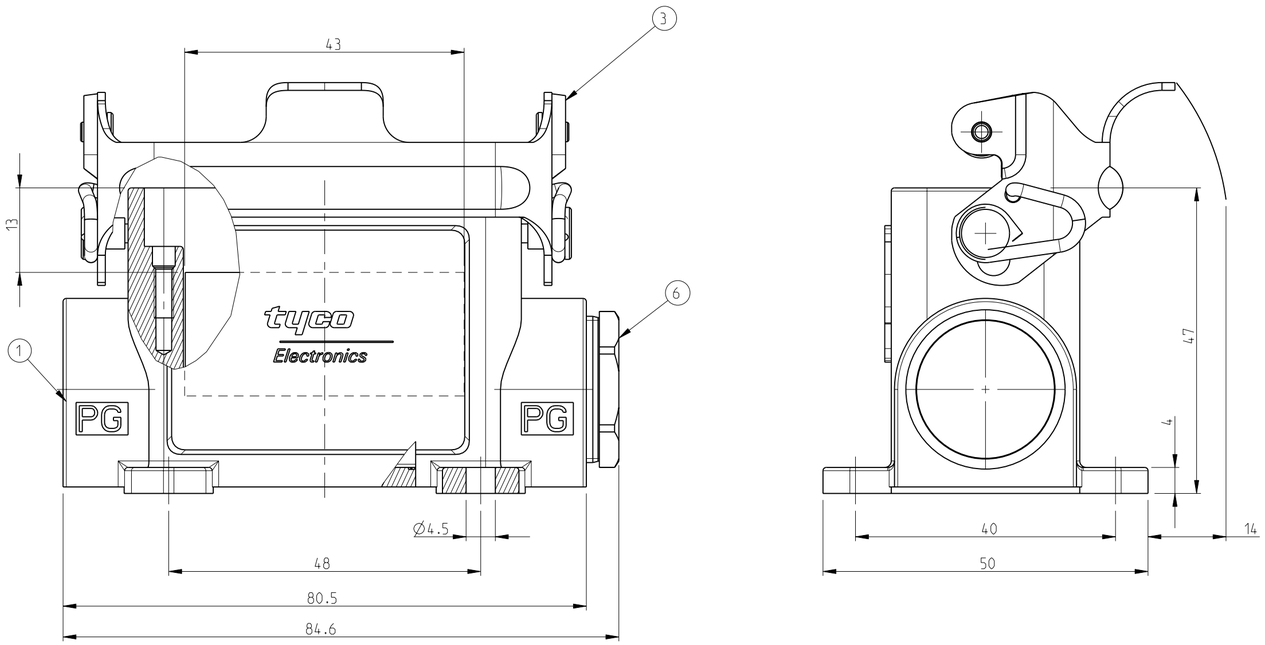

PN 2-2

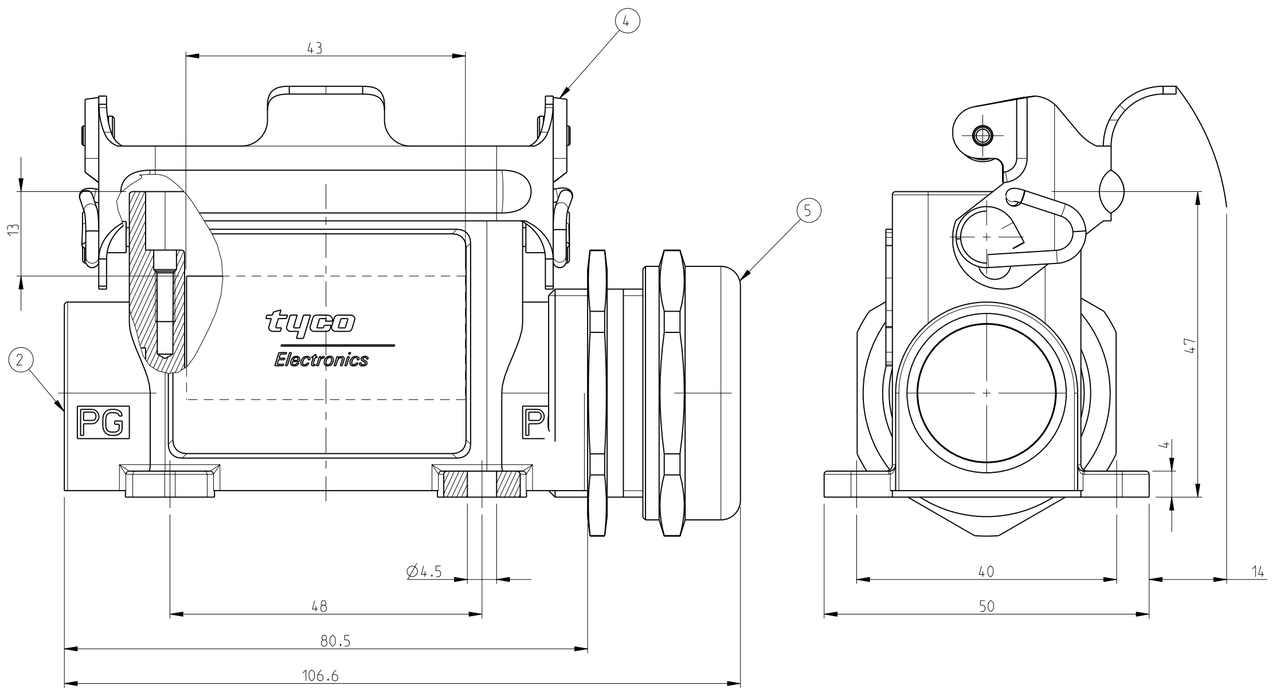

NOTES

1 PACKAGING QUANTITY:5 PIECES PER BOX

2 MATERIAL:HOUSING:ALUMINIUM DIECASTING ALLOY
SEALS:NEOPRENE

3 SURFACE:VARNISH-GREY

4 VARNISH ON THE INSIDE NOT NECESSARILY

PN 1-2

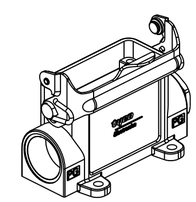

SCALE 1:2

PN 2-2

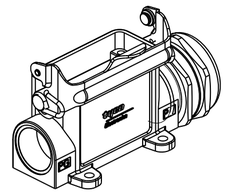

SCALE 1:2

			2	3	3		
-	1	CABLE FITTING	BRASS	NICKEL PLATED	BLUE	6	-
1	-	GLAND FITTING	BRASS	NICKEL PLATED	BLUE	5	-
1	-	CLIP	STAINLES STEEL	BLANK	-	4	-
-	1	CLIP	STEEL	ZINC PLATED	BLUE	3	-
1	-	SURFACE MOUNTED HOUSING	ALUMINIUM	ALUMINIUM OXIDE	BLACK	2	-
-	1	SURFACE MOUNTED HOUSING	ALUMINIUM	-	GREY	1	-
2-2	1-2	DESCRIPTION	MATERIAL	SURFACE	COLOR	ITEM NO	REMARKS

HA.10.SG-LB.1.16

HA-K.10.SG-LB.1.16

THIS DRAWING IS A CONTROLLED DOCUMENT FOR TYCO ELECTRONICS CORPORATION IT IS SUBJECT TO CHANGE AND THE CONTROLLING ENGINEERING ORGANIZATION SHOULD BE CONTACTED FOR THE LATEST REVISION.

DIMENSIONS: mm

TOLERANCES UNLESS OTHERWISE SPECIFIED:
n.ISO 8015:
n.ISO 2768-mH-E:
n.DIN 16901-120
0 PLC ±
1 PLC ±
2 PLC ±
3 PLC ±
4 PLC ±
ANGLES ±-

MATERIAL 2

FINISH 3

DWN	S.KUMAR	02.24.2006
CHK	R.SRINIVAS	02.24.2006
APVD	T.SCHNURPFEIL	02.24.2006
PRODUCT SPEC		
APPLICATION SPEC		
WEIGHT	-	

CUSTOMER DRAWING

Tyco Electronics

Tyco Electronics, AMP GmbH
53757 Sankt Augustin, Germany

NAME: SURFACE MOUNTED HOUSING-SIDE ENTRY
HA.10.SG-LB.1.16

SIZE	CAGE CODE	DRAWING NO	RESTRICTED TO
A2	00779	C-1102123	-

SCALE	SHEET	OF	REV
5:1	1	1	B2

OBSOLETE
NOT the LATEST REVISION

Downloaded from Arrow.com.