REVISIONS					
REV	ECO	DESCRIPTION	DATE	BY	APPR
A1		FIRST RELEASED	Apr.05,2016	Drack	Tommy

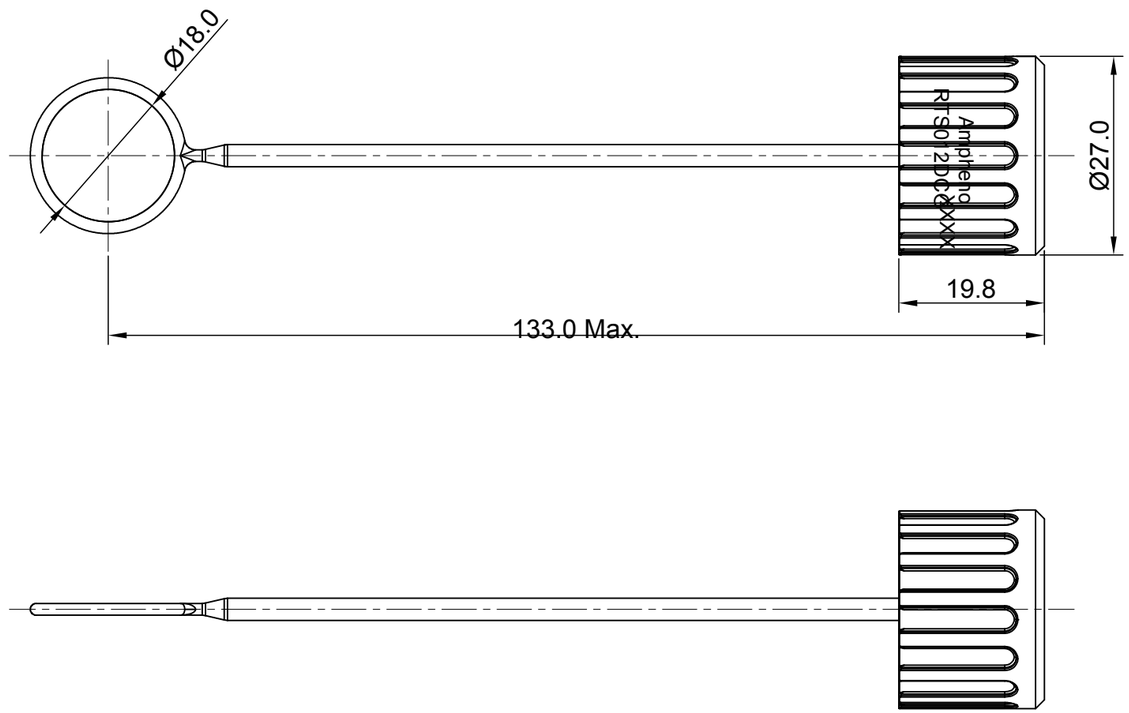

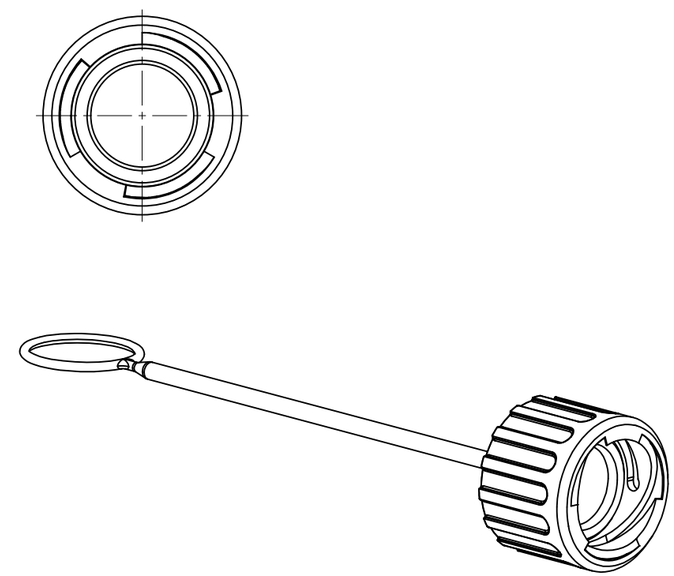

PART NUMBER	
-40°C ~ 105°C	-40°C ~ 125°C
RTS012DCG	RTS012DCG03

NOTES : (UNLESS OTHERWISE SPECIFIED)

1. MATERIAL :
   SHELL : THERMOPLASTIC , UL94 V-0.
   SEAL GASKET : NBR OR SR.
2. SPECIFICATIONS :
   2.1, OPERATING TEMPERATURE : SEE TABLE.
   2.2, IP-CLASS : IP67.
   2.3, MATING CYCLES DURABILITY : 500 CYCLES MIN.
   2.4, RoHS COMPLIANT.
3. ALL DIMENSIONS ARE FOR REFERENCE USE ONLY.

QUANTITY	PART NUMBER	DESCRIPTION	ITEM

MATERIALS LIST

UNLESS OTHERWISE SPECIFIED
1) All dimensions are in metric(mm).
2) Tolerances are as follows:
1 PL DEC ±0.3 | Fractions ±1/64
2 PL DEC ±0.15 | Angles ±1°
3 PL DEC ±0.08
3) Note reference = X

MATERIAL SPECIFICATIONS:

PROCESS SPECIFICATIONS:

NEXT ASS'Y:

SIGNATURES		DATE
DRAWN:	Drack	Apr.05,2016
CHECKED:		
ENGINEER:		
APPROVAL:		
CUSTOMER:		

THIS DRAWING IS SUPPLIED FOR INFORMATION ONLY. DESIGN FEATURES, SPECIFICATIONS AND PERFORMANCE DATA SHOWN HEREON ARE THE PROPERTY OF THE AMPHENOL CORPORATION. NO RIGHTS OF REPRODUCTION ARE IMPLIED. ALL DIMENSIONS ARE SUBJECT TO NORMAL MANUFACTURING VARIATIONS.

Amphenol
Sine Systems - www.amphenol-sine.com
44724 Morley Drive
Clinton Township, MI 48036

ECO-MATE,DUST CAP,RECEPTACLE
SIZE 12

SIZE	TYPE	DWG NO:	REVISION
B	C-	RTS012DCGxx	A1

SCALE: NONE SHEET 1 OF 1

TITLE: ECO-MATE,DUST CAP,RECEPTACLE,SIZE 12
DWG NO: RTS012DCGxx
REV: A1
SH: 1
OF: 1

Downloaded from Arrow.com.