ITEM NO.	PART NUMBER	DESCRIPTION	QTY.	COMPONENT NOTES
1	50-00637	Connector, dc jack, 3.5x1.35xL16.5 mm, brass nickel plated, molding style, 105 °C	1	
2	30-00804	Wire, 2C TS, 24 AWG, UL2651, 300V, 105C, 3.0 mm, VW-1, PVC, red and black	1	
3	24-00355	Overmold, panel mount 3.5 mm dc jack, nylon	1	
4	56-00020	Hardware, nut, hex, 11.0x2.5 mm, M9x1.0, brass, nickel plated	1	
5	56-00021	Hardware, washer, lock, 12x9x1.1 mm, SPCC, nickel plated	1	

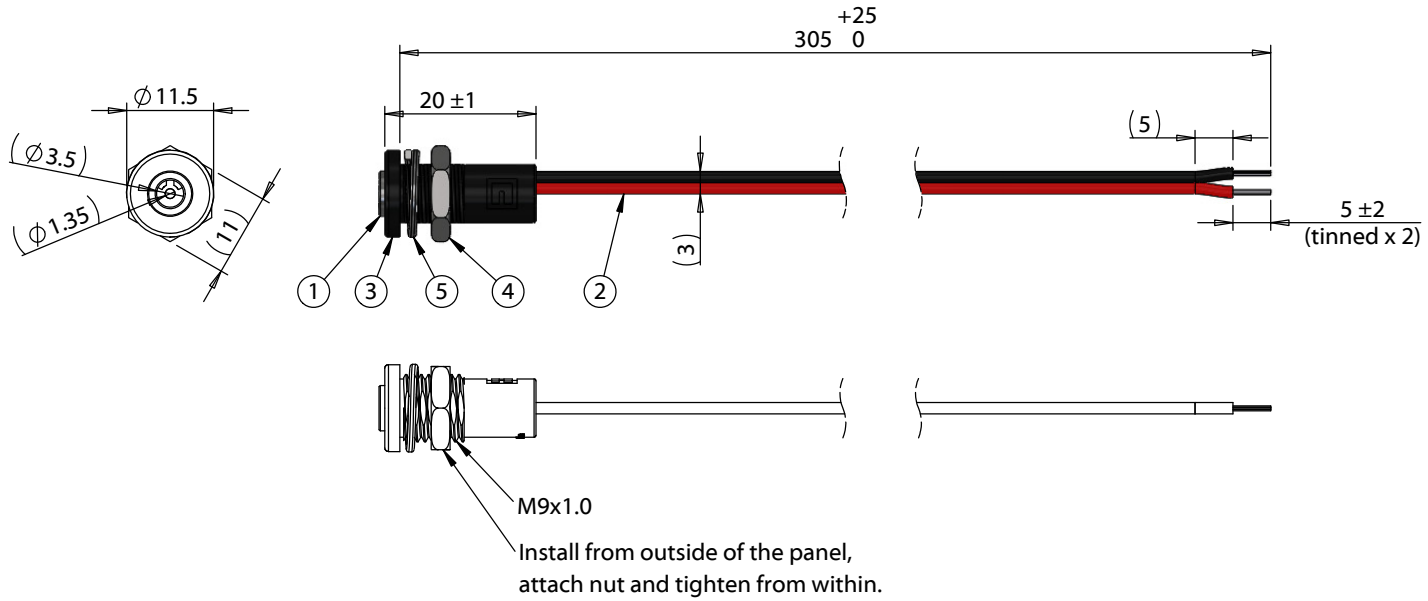

Installation Details
Panel thickness: 1.0 - 4.0
Recommended panel cutout:

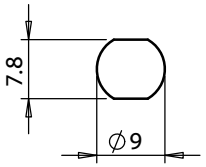

Ratings
Maximum Operating Voltage: 48 V
Maximum Operating Current: 4.5 A

Operating Temperature Range
-10 ~ 105 °C, relative humidity of 85% or less

Notes:
Functionally equivalent components may be substituted

Wiring Diagram	
50-00637	Wire Color
Center	Red
Sleeve	Black

Revision:	Date:	Description:
A	9/25/2020	Initial release

Prepared: CR Digitally signed by CR Date: 2026.05.29 16:52:52 -07'00'

Verified: KW Digitally signed by KW Date: 2026.07.20 16:01:20 -07'00'

Dimensions are in millimeters.
Tolerances:
X: ± 0.5 mm
X.X: ± 0.3 mm
X.XX: ± 0.05 mm

Notes:
RoHS compliant
Function test: no open, no short circuit, no intermittent

Description:
Cable, 305 mm, 3.5x1.35 mm 50-00637 dc panel mount jack to stripped and tinned, 24 AWG, 30-00804

TENSILITY
tel 1.541.323.3228 800 877.670.7118
fax 1.541.323.4202 web tensility.com

Size: A
Part number: 10-03866
Scale: 1:1
Sheet 1 of 1

5 4 3 2 1

To see a custom version of this cable assembly, call Tensility at 541-323-3228 or email engineering@tensility.com

Downloaded from Arrow.com.