| CHARACTERISTICS | | | | | |
|---|---|---|---|---|---|
| PARAMETER | MIN | TYP | MAX | UNITS | CONDITIONS/REMARKS |
| SUPPLY VOLTAGE | 5.4 | 8.0 | 13.2 | VOLTS | -25° C TO 85° C |
| SUPPLY CURRENT | | 13 | 20 | mA | MAX @ -25° C, TYP @ 25°, VS = 8.0V, EXCLUDES LOAD |
| OUTPUT CURRENT | 1 | | | mA | SINKING OR SOURCING |
| OUTPUT VOLTAGE SWING | (-V)+1.25 | | (+V)-1.25 | VOLTS | MAX CLAMPED @ 9.0 VOLTS MIN |
| SENSITIVITY | 18.3 | | 20.8 | mV/N1 | @ Vs = 8.0 VOLTS & 25° C △5 |
| LINEARITY | | .5 | 1.0 | % OF SPAN | DEV FROM STR LINE FROM -1 MAX TO +1 MAX △1 |
| Vout @ Ø N1 | .5(Vs)-2% | | .5(Vs)+2% | VOLTS | 25° C |
| TEMP ERROR - NULL | -.02 | | +.02 | %/° C | -25° C TO 85° C |
| TEMP ERROR - GAIN | -.06 | | +.01 | 5/° C | -25° C TO 85° C |

CSLA2CFI

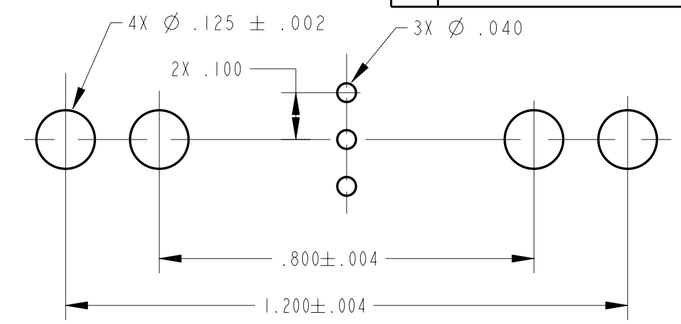


SUGGESTED HOLE CENTERS
SCALE 4:1

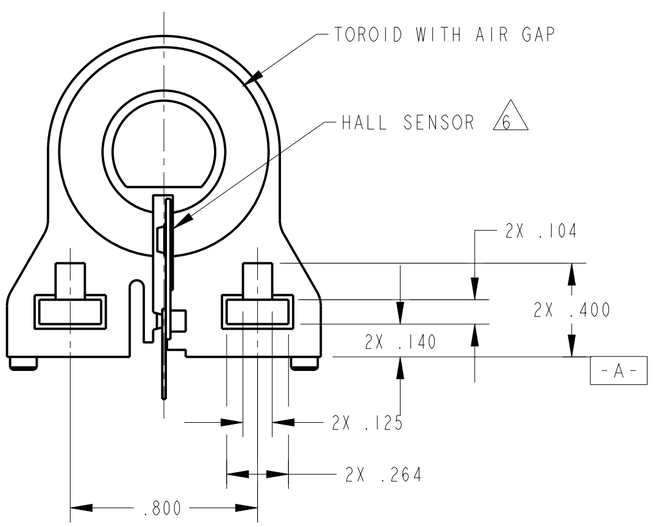


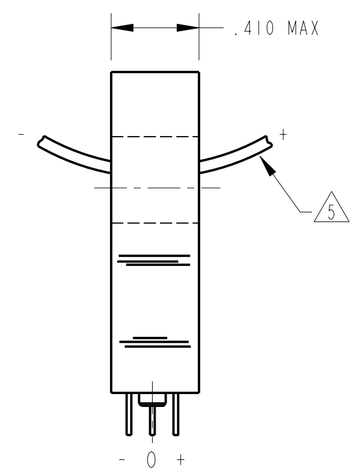


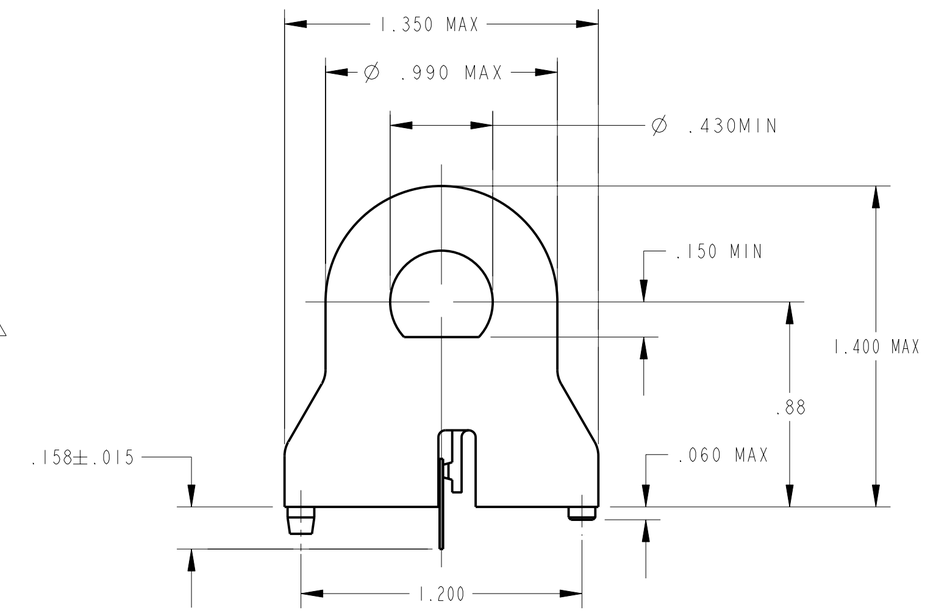


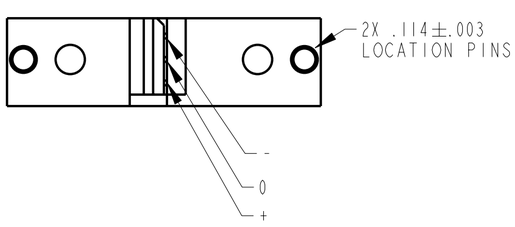


NOTES
△1 SUGGESTED I MAX FOR LINEAR OPERATION IS 125 AMPS
2 - RECOMMENDED MOUNTING IS 4-40 SQUARE NUT AND .375 LONG 4-40 SCREW
3 - CONVENTIONAL CURRENT FLOW IN DIRECTION INDICATED WILL CAUSE AN INCREASE IN OUTPUT VOLTAGE
4 - THE DEVICE CANNOT BE DAMAGED BY MAGNETIC OVERDRIVE
△5 AT Vs OTHER THAN 8.0 VOLTS, SENSITIVITY = (NUMBER SHOWN) X Vs/8
△6 BACKSIDE OF HALL SENSOR IS ELECTRICALLY CONNECTED TO THE "_" TERMINAL
7 - SENSOR COATED WITH HUMISEAL#
8 - CORE RO NE VISUALLY CENTERED ABOUT SENSOR

THIRD ANGLE PROJECTION
SCALE 2 : 1
DO NOT SCALE PRINT

UNLESS OTHERWISE SPECIFIED TOLERANCES ARE

| | | |
|---|---|---|
| ONE PLACE | (.0) | ± .030 |
| TWO PLACES | (.00) | ±.015 |
| THREE PLACES | (.000) | ± .005 |
| ANGLES | | ± |

WEIGHT

THIS DRAWING COVERS A PROPRIETARY ITEM AND IS THE PROPERTY OF MICRO SWITCH, A DIVISION OF HONEYWELL. THIS DRAWING IS NOT TO BE COPIED OR USED WITHOUT THE APPROVAL OF MICRO SWITCH.

MICRO SWITCH a Honeywell Division
FED. MFG. CODE 91929

CURRENT SENSOR

CATALOG LISTING
CSLA2CFI

ANSI Y14.5M-1982 APPLIES

CSLA2CFI
PAGE 1 OF 1
RELEASE NO. PR-22035
REPLACES
DRAWING NUMBER
ISSUE 2
CHECK
REVISIONS
A 200456 LJK 26 MAY 00
CHECK
24 MAY 00
SAV
CHECK
24 MAY 00
DRAWN LJK
PTC/CAD 2D

Downloaded from Arrow.com.