# TRACO POWER

## DC/DC Railway Converter

## TEP 200WIRCMF Series, 200 Watt

- **Chassis mount with screw terminal block**
- **Including EMI filter to meet EN 55032, class A**
- **Ultra wide 4:1 input voltage ranges 9–36, 18–75, 43–160 VDC**
- **EN 50155 approval for railway applications**
- **Very high efficiency up to 91%**
- **No minimum load**
- **Soft start**
- **Under voltage lock-out circuit**
- **Adjustable output voltage +10 / -20%**
- **Sense line**
- **3-year product warranty**

UL 62368-1 IEC 62368-1

The TEP 200WIRCMF Series is a family of isolated high performance DC/DC converter modules with ultra-wide 4:1 input voltage ranges. They come in chassis mount version with screw terminal block and with integrated EMI input filter to meet EN 55032 class A. A very high efficiency allows full power operation at 25°C with only 100 LFM air flow cooling and operation at 60°C with only 40% power derating. The very wide input voltage range makes these converters interesting solution for battery operated systems. Typical applications are in telecom/datacom, industry control and railway systems for onboard power distribution.

## Models

| Order Code | Input Voltage Range | Output Voltage nom. (adjustable) | Output Current max. | Efficiency typ. |
|---|---|---|---|---|
| **TEP 200-2412WIRCMF** | 9 - 36 VDC (24 VDC nom.) | 12 VDC (9.6 - 13.2 VDC) | 15'000 mA | 89 % |
| **TEP 200-2413WIRCMF** | | 15 VDC (12.0 - 16.5 VDC) | 12'000 mA | 90 % |
| **TEP 200-2415WIRCMF** | | 24 VDC (19.2 - 26.4 VDC) | 7'500 mA | 90 % |
| **TEP 200-2416WIRCMF** | | 28 VDC (22.4 - 30.8 VDC) | 6'500 mA | 90 % |
| **TEP 200-2418WIRCMF** | | 48 VDC (38.4 - 52.8 VDC) | 3'700 mA | 89 % |
| **TEP 200-4812WIRCMF** | 18 - 75 VDC (48 VDC nom.) | 12 VDC (9.6 - 13.2 VDC) | 18'000 mA | 90 % |
| **TEP 200-4813WIRCMF** | | 15 VDC (12.0 - 16.5 VDC) | 14'000 mA | 91 % |
| **TEP 200-4815WIRCMF** | | 24 VDC (19.2 - 26.4 VDC) | 9'000 mA | 90 % |
| **TEP 200-4816WIRCMF** | | 28 VDC (22.4 - 30.8 VDC) | 7'500 mA | 91 % |
| **TEP 200-4818WIRCMF** | | 48 VDC (38.4 - 52.8 VDC) | 4'500 mA | 90 % |
| **TEP 200-7212WIRCMF** | 43 - 160 VDC (110 VDC nom.) | 12 VDC (9.6 - 13.2 VDC) | 20'000 mA | 89 % |
| **TEP 200-7213WIRCMF** | | 15 VDC (12.0 - 16.5 VDC) | 16'000 mA | 90 % |
| **TEP 200-7215WIRCMF** | | 24 VDC (19.2 - 26.4 VDC) | 10'000 mA | 89 % |
| **TEP 200-7216WIRCMF** | | 28 VDC (22.4 - 30.8 VDC) | 8'500 mA | 90 % |
| **TEP 200-7218WIRCMF** | | 48 VDC (38.4 - 52.8 VDC) | 5'000 mA | 89 % |




Downloaded from Arrow.com.

## Options

| | |
|---|---|
| **TEP-MK1** | - Optional DIN-Rail Mounting Kit: www.tracopower.com/overview/tep-mk1 |
| **on demand** (backorder with MOQ non stocking item) | - Optional model with 3.3 VDC and 50'000 mA Output, and 9 - 36 VDC Input<br>- Optional model with 5 VDC and 36'000 mA Output, and 9 - 36 VDC Input<br>- Optional model with 3.3 VDC and 50'000 mA Output, and 18 - 75 VDC Input<br>- Optional model with 5 VDC and 40'000 mA Output, and 18 - 75 VDC Input<br>- Optional model with 3.3 VDC and 57'000 mA Output, and 43 - 160 VDC Input<br>- Optional model with 5 VDC and 44'000 mA Output, and 43 - 160 VDC Input<br>- Optional models with 2:1 Input<br>- Chassis mount models w/o filter: www.tracopower.com/overview/tep200wircm<br>- Optional models with inverse Remote On/Off function (passive = off) |

## Input Specifications

| | | | |
|---|---|---|---|
| Input Current | - At no load | 24 Vin models: | **35 mA typ.** |
| | | 48 Vin models: | **20 mA typ.** |
| | | 110 Vin models: | **10 mA typ.** |
| Surge Voltage | | 24 Vin models: | **50 VDC max.** (1 s max.) |
| | | 48 Vin models: | **100 VDC max.** (1 s max.) |
| | | 110 Vin models: | **185 VDC max.** (1 s max.) |
| Under Voltage Lockout | | 24 Vin models: | **7.3 VDC min. / 7.7 VDC typ. / 8.1 VDC max.** |
| | | 48 Vin models: | **15.5 VDC min. / 16 VDC typ. / 16.3 VDC max.** |
| | | 110 Vin models: | **33 VDC min. / 34.5 VDC typ. / 36 VDC max.** |
| Recommended Input Fuse | | 24 Vin models: | **32'000 mA** (fast acting) |
| | | 48 Vin models: | **20'000 mA** (fast acting) |
| | | 110 Vin models: | **10'000 mA** (fast acting) |
| | | | (The need of an external fuse has to be assessed in the final application.) |
| Input Filter | | | Internal Pi-Type |

## Output Specifications

| | | | |
|---|---|---|---|
| Output Voltage Adjustment | | | **−20% to +10%** (By external trim resistor) |
| | | See application note: | www.tracopower.com/tep200wircmf-adj |
| | | | Output power must not exceed rated power! |
| Voltage Set Accuracy | | | **±1% max.** |
| Regulation | - Input Variation (Vmin - Vmax) | | **0.1% max.** |
| | - Load Variation (0 - 100%) | | **0.1% max.** |
| Ripple and Noise (20 MHz Bandwidth) | | 3.3 Vout models: | **75 mVp-p max.** (w/ 1 µF X7R \|\| 25 µF poscap) |
| | | 5 Vout models: | **75 mVp-p max.** (w/ 1 µF X7R \|\| 25 µF poscap) |
| | | 12 Vout models: | **100 mVp-p max.** (w/ 1 µF X7R \|\| 25 µF poscap) |
| | | 15 Vout models: | **100 mVp-p max.** (w/ 1 µF X7R \|\| 25 µF poscap) |
| | | 24 Vout models: | **200 mVp-p max.** (w/ 4.7 µF X7R) |
| | | 28 Vout models: | **200 mVp-p max.** (w/ 4.7 µF X7R) |
| | | 48 Vout models: | **300 mVp-p max.** (w/ 2.2 µF X7R) |

All specifications valid at nominal voltage, resistive full load and +25°C after warm-up time, unless otherwise stated.



Downloaded from Arrow.com.

| | | | |
|---|---|---|---|
| Capacitive Load | - 24 Vin input | 3.3 Vout models: | 151'000 µF max. |
| | | 5 Vout models: | 72'000 µF max. |
| | | 12 Vout models: | 12'500 µF max. |
| | | 15 Vout models: | 8'000 µF max. |
| | | 24 Vout models: | 3'100 µF max. |
| | | 28 Vout models: | 2'300 µF max. |
| | | 48 Vout models: | 770 µF max. |
| | - 48 Vin input | 3.3 Vout models: | 151'000 µF max. |
| | | 5 Vout models: | 80'000 µF max. |
| | | 12 Vout models: | 15'000 µF max. |
| | | 15 Vout models: | 9'300 µF max. |
| | | 24 Vout models: | 3'700 µF max. |
| | | 28 Vout models: | 2'600 µF max. |
| | | 48 Vout models: | 930 µF max. |
| | - 110 Vin input | 3.3 Vout models: | 172'000 µF max. |
| | | 5 Vout models: | 88'000 µF max. |
| | | 12 Vout models: | 16'600 µF max. |
| | | 15 Vout models: | 10'600 µF max. |
| | | 24 Vout models: | 4'100 µF max. |
| | | 28 Vout models: | 3'000 µF max. |
| | | 48 Vout models: | 1'000 µF max. |
| Minimum Load | | | Not required |
| Temperature Coefficient | | | ±0.02 %/K max. |
| Hold-up Time | | | 10 ms min. (acc. to EN 50155 Class S2, see application note for ext. capacitor calculation: www.tracopower.com/info/holdup_en50155.pdf) |
| Start-up Time | | | 75 ms typ. |
| Short Circuit Protection | | | Continuous, Automatic recovery |
| Output Current Limitation | | | 120 - 150% of Iout max. |
| Overvoltage Protection | | | 115 - 130% of Vout nom. |
| Transient Response | - Response Time | | 200 µs typ. / 250 µs max. (25% Load Step) |

## Safety Specifications

| | | |
|---|---|---|
| Standards | - IT / Multimedia Equipment | EN 60950-1<br>EN 62368-1<br>IEC 60950-1<br>IEC 62368-1<br>UL 60950-1<br>UL 62368-1 |
| | - Railway Applications | EN 50155 |
| | - Certification Documents | www.tracopower.com/tep200wircmf-safety-cert |
| Energy Source | - Output, acc. to 62368-1 | ES2 (48 Vout models)<br>ES1 |
| Power Source | - Output, acc. to 62368-1 | PS3 |
| Pollution Degree | | PD 2 |
| Over Voltage Category | | Not mains connected |

## EMC Specifications

| | | |
|---|---|---|
| EMI (Emissions) | | EN 50121-3-2 (EMC for Rolling Stock) |
| | - Conducted Emissions | EN 55011 class A (internal filter)<br>EN 55032 class A (internal filter) |
| | - Radiated Emissions | EN 55011 class A (internal filter)<br>EN 55032 class A (internal filter) |

All specifications valid at nominal voltage, resistive full load and +25°C after warm-up time, unless otherwise stated.



Downloaded from Arrow.com.

| | | | |
|---|---|---|---|
| EMS (Immunity) | | | EN 50121-3-2 (EMC for Rolling Stock) |
| | - Electrostatic Discharge | Air: | EN 61000-4-2, ±8 kV, perf. criteria A |
| | | Contact: | EN 61000-4-2, ±6 kV, perf. criteria A |
| | - RF Electromagnetic Field | | EN 61000-4-3, 20 V/m, perf. criteria A |
| | - EFT (Burst) / Surge | | EN 61000-4-4, ±2 kV, perf. criteria A |
| | | | EN 61000-4-5, ±2 kV, perf. criteria A |
| | | Ext. input component: | 24 & 48 Vin models: 2 x KY 220 µF<br>110 Vin models: 2 x KXJ 150 µF |
| | - Conducted RF Disturbances | | EN 61000-4-6, 10 Vrms, perf. criteria A |
| | - PF Magnetic Field | Continuous: | EN 61000-4-8, 100 A/m, perf. criteria A |
| | | 1 s: | EN 61000-4-8, 1000 A/m, perf. criteria A |
| EMC / Environmental | - Certification Documents | | www.tracopower.com/tep200wircmf-emc-cert |

## General Specifications

| | | | |
|---|---|---|---|
| Relative Humidity | | | 95% max. (non condensing) |
| Temperature Ranges | - Operating Temperature | | −40°C to +75°C |
| | - Case Temperature | | +115°C max. |
| | - Storage Temperature | | −40°C to +105°C |
| Power Derating | - High Temperature | | Depending on model |
| | | See application note: | www.tracopower.com/tep200wircmf-cc |
| Over Temperature Protection Switch Off | - Protection Mode | | 120°C typ. (Automatic recovery at 105°C typ.) |
| | - Measurement Point | | Base-Plate |
| Cooling System | | | Natural convection (20 LFM) |
| Sense Function | | | 10% max. of Vout nom.<br>(If sense function is not used, sense pins must be connected to corresponding polarity output pins.) |
| | | See application note: | www.tracopower.com/tep200wircmf-sense |
| Remote Control | - Voltage Controlled Remote (passive = on) | | On: 3.0 to 12 VDC or open circuit<br>Off: 0 to 1.2 VDC or short circuit<br>Refers to 'Remote' and '-Vin' Pin |
| | - Off Idle Input Current | | 3 mA typ. |
| | - Remote Pin Input Current | | -0.5 to 1.0 mA<br>(Optional models with inverse Remote On/Off function (passive = off)) |
| Altitude During Operation | | | 2'000 m max. (for reinforced insulation)<br>5'000 m max. (for functional insulation)) |
| Regulator Topology | | | Forward Converter |
| Switching Frequency | | | 225 - 275 kHz (PWM)<br>250 kHz typ. (PWM) |
| Insulation System | | | Reinforced Insulation |
| Working Voltage (rated) | | | 145 VAC (3.3/5 Vout models)<br>185 VAC (48/53 Vout models)<br>172 VAC (other Vout models) |
| Isolation Test Voltage | - Input to Output, 60 s | | 3'000 VAC |
| | - Input to Case, 60 s | | 1'500 VAC |
| | - Output to Case, 60 s | | 1'500 VAC |
| Isolation Resistance | - Input to Output, 500 VDC | | 1'000 MΩ min. |
| Isolation Capacitance | - Input to Output, 100 kHz, 1 V | | 2'500 pF max. |
| Reliability | - Calculated MTBF | | 300'000 h (MIL-HDBK-217F, ground benign) |
| Environment | - Vibration | | MIL-STD-810F<br>EN 61373 |
| | - Mechanical Shock | | MIL-STD-810F<br>EN 61373 |
| | - Thermal Shock | | MIL-STD-810F |
| | - Flammability | | EN 45545-2<br>www.tracopower.com/info/en45545-declaration.pdf |

All specifications valid at nominal voltage, resistive full load and +25°C after warm-up time, unless otherwise stated.



Downloaded from Arrow.com.

| | | |
|---|---|---|
| Housing Material | | Alu base-plate w. metal case (24 and 48 Vin models)<br>Alu base-plate w. plastic case (110 Vin models) |
| Base Material | | Non-conductive FR4 (UL 94 V-0 rated) (24 and 48 Vin models only) |
| Potting Material | | Silicone (UL 94 V-0 rated) |
| Housing Type | | Metal Case (24 and 48 Vin models)<br>Plastic Case (110 Vin models) |
| Mounting Type | | Chassis Mount |
| Connection Type | | Screw Terminal |
| Weight | | 287 g |
| Thermal Impedance | - Case to Ambient | 6.1 K/W typ. |
| Environmental Compliance | - REACH Declaration | www.tracopower.com/info/reach-declaration.pdf<br>REACH SVHC list compliant<br>REACH Annex XVII compliant |
| | - RoHS Declaration | www.tracopower.com/info/rohs-declaration.pdf<br>Exemptions: 7(a), 7(c)-I<br>(RoHS exemptions refer to the component concentration only, not to the overall concentration in the product (O5A rule).) |
| | - SCIP Reference Number | 814f10c5-0fbd-4350-bd50-90d0539e5374 |

## Additional Information

| | |
|---|---|
| Supporting Documents | www.tracopower.com/overview/tep200wircmf |
| Frequently Asked Questions | www.tracopower.com/glossary-faq |
| Glossary | www.tracopower.com/info/glossary.pdf |
| Service Portal | www.tracoserviceportal.com |

## Outline Dimensions

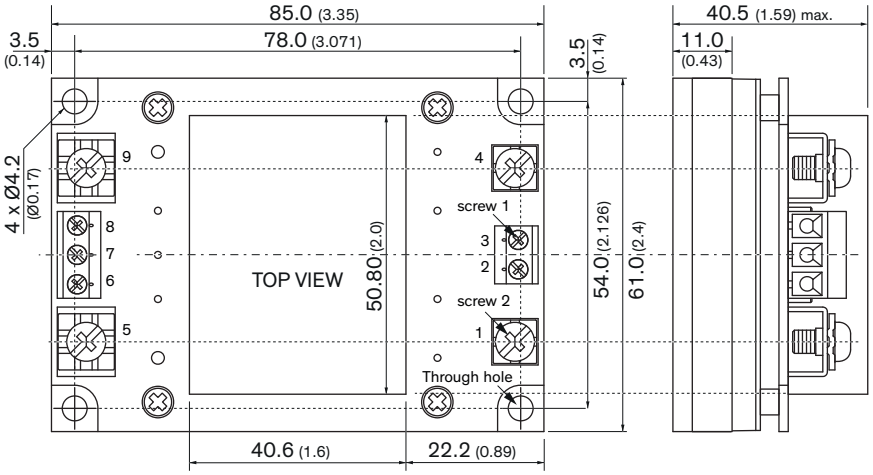


Dimensions in mm (inch)
Tolerances x.x ±0.5 (x.xx ±0.02)
x.xx ±0.25 (x.xxx ±0.01)
Mounting hole pitch tolerances ±0.25 (±0.01)

Screw 2:
Type M5
Head diameter 8.9 (0.350)
Rated current: 65 A

The screw 1 locked torque: max. 5.2 kgfcm / 0.51 Nm
The screw 2 locked torque: max. 16.5 kgfcm / 1.65 Nm

Mounting screw locked torque: max. 11.2 kgfcm / 1.10 Nm

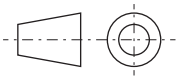

### Pinout

| Pin | Single |
|---|---|
| 1 | –Vin (GND) |
| 2 | Case |
| 3 | Remote On/Off |
| 4 | +Vin (Vcc) |
| 5 | –Vout |
| 6 | –Sense |
| 7 | Trim |
| 8 | +Sense |
| 9 | +Vout |

Wire dimension:
AWG 14 max.

Note: The size of the wires has to be assessed in the final application.

© Copyright 2026 Traco Electronic AG


Downloaded from Arrow.com.