OV4689

4-megapixel product brief

High Frame Rate 4-Megapixel CameraChip™ Sensor with Excellent Low-Light Sensitivity and High Dynamic Range for Security Applications

The OV4689 is a high performance 4-megapixel CameraChip™ sensor in a native 16:9 format designed for next-generation surveillance and security systems. The sensor utilizes an advanced 2-micron OmniBSI™-2 pixel to provide best-in-class low-light sensitivity and high dynamic range (HDR).

The 1/3-inch OV4689 can capture full-resolution 4-megapixel high definition (HD) video at 90 frames per second (fps), 1080p HD at 120 fps, and binned 720p HD at 180 fps. The sensor's high frame rates enable crisp, clean image and video capture of fast moving objects.

The OV4689 provides timing to capture full-resolution HDR using frame-based "sequential HDR" or line-based "staggered HDR", and quarter resolution HDR using "alternate row HDR". The benefits of using "staggered HDR" compared to "sequential HDR" are significant reduction in motion artifacts and lower memory requirement for host processing. These modes produce high quality full-resolution 4-megapixel HDR video under extreme variations of bright and dark conditions, ensuring high contrast and excellent scene reproduction.

The OV4689 features a high-speed 4-lane MIPI serial output interface to facilitate the required high data transfer rate. The OV4689 is available in a chip scale package (CSP).

Find out more at www.ovt.com.

OMNIVISION®

Downloaded from Arrow.com.

OV4689

Ordering Information

- OV04689-H67A
  (color, lead-free) 67-pin CSP

Applications

- IP cameras
- sports cameras
- home monitoring
- security cameras

Technical Specifications

- **active array size:** 2688 x 1520
- **maximum image transfer rate:**
  - 2688 x 1520: 90 fps
  - 1920 x 1080: 120 fps
  - 1280 x 720: 180 fps
  - 672 x 380: 330 fps
- **power supply:**
  - core: 1.1 ~ 1.3V
  - analog: 2.6 ~ 3.0V
  - I/O: 1.7 ~ 3.0V
- **power requirements:**
  - active: 163 mA (261 mW)
  - standby: 1 mA
  - XSHUTDOWN: <10 µA
- **temperature range:**
  - operating: -30°C to +85°C junction temperature
  - stable image: 0°C to +60°C junction temperature
- **output formats:** 10-bit RAW RGB
- **lens size:** 1/3"
- **lens chief ray angle:** 0°
- **scan mode:** progressive
- **pixel size:** 2 µm x 2 µm
- **image area:** 5440 µm x 3072 µm

Product Features

- automatic black level calibration (ABLC)
- programmable controls for:
  - frame rate
  - mirror and flip
  - cropping
  - windowing
- static defective pixel canceling
- supports output formats: 10-bit RAW RGB (MIPI)
- supports horizontal and vertical subsampling
- supports image sizes:
  - 4MP
  - 3MP
  - EIS1080p
  - 1080p
  - EIS720p
- fast mode switching
- support 2x2 binning, 4x4 binning, re-sampling filter
- standard serial SCCB interface
- up to 4-lane MIPI serial output interface
- embedded 4K bits one-time programmable (OTP) memory for part identification, etc.
- two on-chip phase lock loops (PLLs)
- programmable I/O drive capability
- built-in temperature sensor

Functional Block Diagram

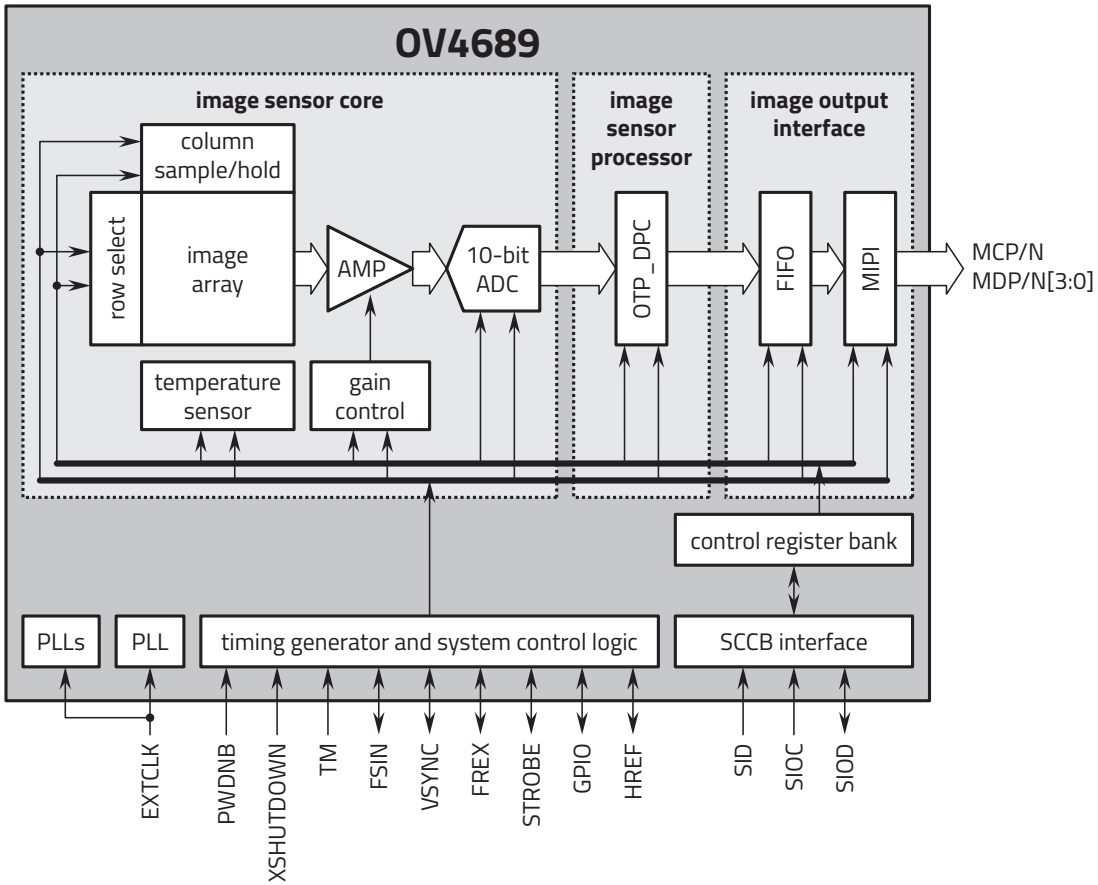

Version 1.8, August 2023

4275 Burton Drive
Santa Clara, CA 95054
USA

Tel: + 1 408 567 3000
Fax: + 1 408 567 3001
www.ovt.com

OMNIVISION reserves the right to make changes to their products or to discontinue any product or service without further notice. OMNIVISION and the OMNIVISION logo are registered trademarks of OmniVision Technologies, Inc. CameraChip and OmniBSI are trademarks of OmniVision Technologies, Inc. All other trademarks are the property of their respective owners.

OMNIVISION®

Downloaded from Arrow.com.