KSA & KSL MKII Series

High Performance Sealed Tactile Switch

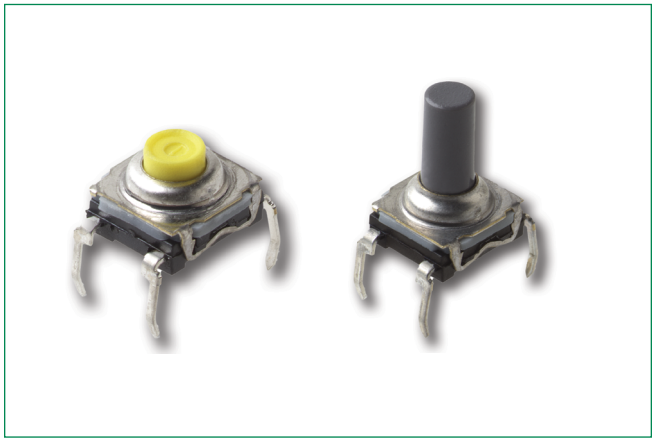

Description

KSA MKII series switch has the highest sealing performance, making it ideal for consumer, automotive and industrial applications that must withstand erosion and harsh environments, such as regular exposure to water. The KSA MKII is also highly responsive due to its excellent tactile feel.

Features & Benefits

- Highest tact switch sealing performance
- Improved sealing through a modification of the crimping technique and to a double overmolding of the terminal
- Totally sealed
- Up to 1M operations
- RoHS compliant and compatible

Applications

- Transportation
- Industrial
- Telecommunication networks
- Household appliances
- Heating control systems

Specifications

Contact Arrangement	SPST, N.O.
Terminals	PC pins
Sealing	IP67

Electrical Specifications

	Silver	Gold
Maximum Power	1 VA	0.2 VA
Min. / Max. Voltage	1 - 32VDC	
Min. / Max. Current	1 - 50 mA	1 - 10 mA
Dielectric Strength	≥ 250 Vrms	
Contact Resistance	≤ 100 mΩ	
Insulation Resistance	(100 V): ≥ 10^9 Ω	
Bounce Time	≤ 1 ms	

Environmental Specifications

	Silver	Gold
Operating Temperature	-40˚C to 85˚C	-40˚C to 125˚C
Storage Temperature	-40˚C to 85˚C	-55˚C to 125˚C

Process

Packaging	Delivered in boxes of 500 pieces (250 pieces for KSL)
Soldering	Wave soldering compatible with lead free soldering profile.

Mechanical Characteristics

Part #	Actuation Force (N)	Operating Life (operations)	Travel to make (mm)
KSA0M212	1.3 ± 0.3	100,000	0.5 ± 0.15
KSA0M312		1,000,000	
KSA0M412	3 ± 0.75	100,000	0.6 ± 0.25
KSA0M512	5 ± 1.25		0.7 ± 0.25

Notes

Specifications listed above are for switches with standard options. For information on specific and custom switches, consult Customer Service Center. Other versions in terms of force, termination length and corrosion protection available. Please contact your sales representative. This data sheet does not provide enough information for applications which require a certain level of quality or safety such as automotive, medical systems, safety equipment. Please contact your sales representative to get contractual specification package.

© 2025 Littelfuse, Inc.
Specifications are subject to change without notice.
Revised: VL 11/10/25

Downloaded from Arrow.com.

KSA & KSL MKII Series

High Performance Sealed Tactile Switch

Ordering Number

Our easy build-a-switch concept allows you to mix and match options to create the switch you need. To order, select desired option from each category and place it in the appropriate box. However, please note that all the combinations of these options are not feasible. For any part number different from those listed above, please consult your local representative.

KSx - 0 - x - x - x - 2 - xxx

Type
A: Short hard plastic
L: Long hard plastic

Ground Terminal
0: Without

Insertion
M: Manual (bulk packaging)

Operating Force
2: 1.3N (130 grams), 100,000 operations
3: 1.3N (130 grams), 1,000,000 operations
4: 3N (300 grams), 100,000 operations
5: 5N (500 grams), 100,000 operations
9: 3N (300 grams) 500,000 operations

Contact Material
1: Silver contacts
3: Gold contacts

Sealing
2: High sealing performance

LFT: RoHS compliant and compatible. Tin plated.*
LFS: Lead free compatible, silver plated **
LFG: Lead free compatible, gold plated **

Note:
* LFT versions will be discontinued in 2026 (see PDN25-33)
** LFS and LFG versions will be launched in 2026

Manual Insertion Dimensions (mm)

KSL

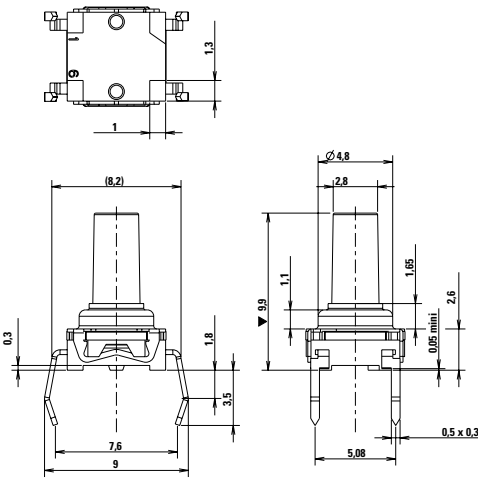

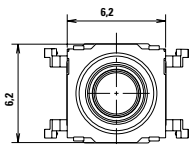

KSA

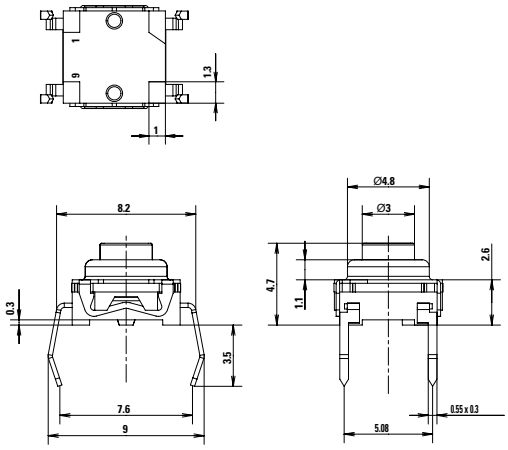

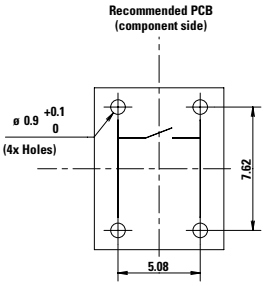

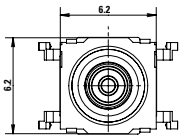

Liability Limiation

This datasheet does not provide enough information for applications that require a certain level of quality or safety such as automotive, medical systems, or safety equipement. Please contact customer service for the contractual specification package.

Disclaimer Notice - Information furnished is believed to be accurate and reliable. However, users should independently evaluate the suitability of and test each product selected for their own applications. Littelfuse products are not designed for, and may not be used in, all applications. Read complete Disclaimer Notice at http://www.littelfuse.com/disclaimer-electronics.

© 2025 Littelfuse, Inc.
Specifications are subject to change without notice.
Revised: VL 11/10/25

Downloaded from Arrow.com.