A
contact arrangement

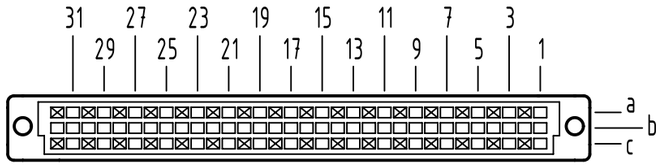

32 solder-contacts

⊠ = solder-contact

□ = position without contact

A
board drillings

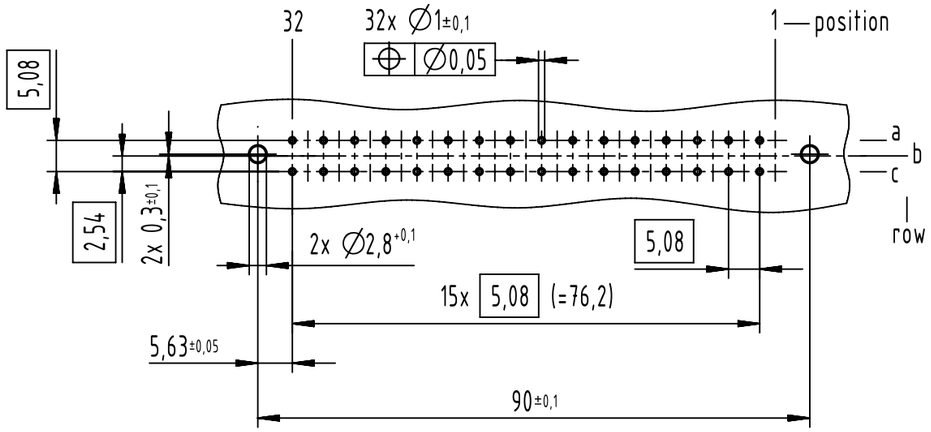

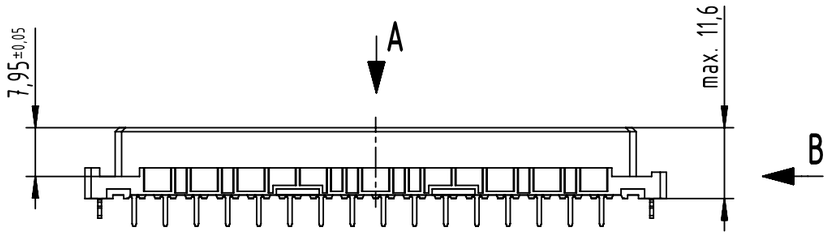

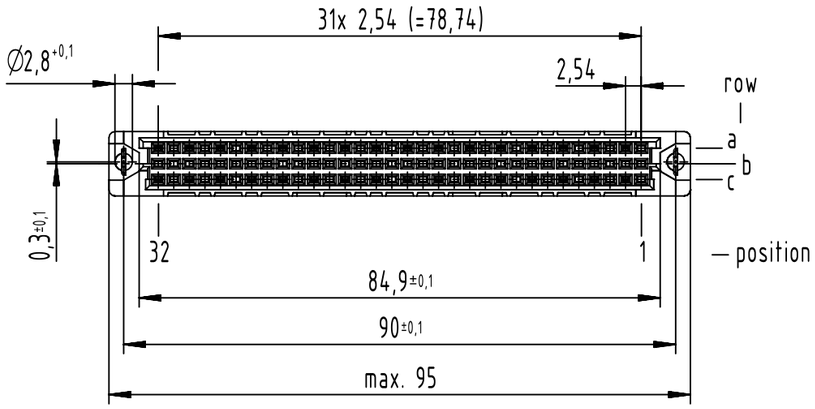

B (2:1)

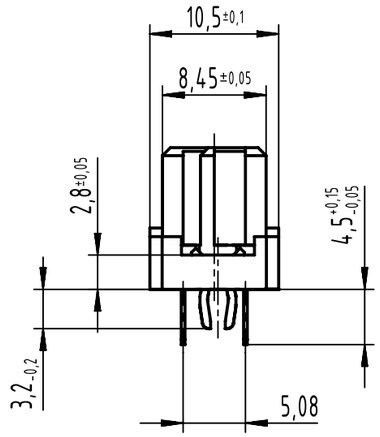

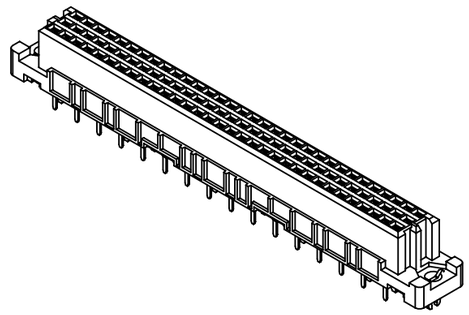

further information see product data sheet

part no.	performance level
09 03 432 6825	2

All Dimensions in mm
Original Size DIN A3

Scale 1:1 | Free size tol. IEC 60603-2 | Ref. Sub. TB 09 03 432 x825 / Mod. 36400 / 06.07.2011

All rights reserved

Department EL PD

HARTING
D-32339 Espelkamp

Created by	Inspected by	Standardisation	Date	State
STORCK	LEHNERT	302077	2021-03-12	Final Release

Title: DIN Signal type C female solder 4.5 with clip 32-pole

Doc-Key / ECM-Nr. 100173852/UGD/174/G 500000190783

Type: TB | Number: 0903432X825 | Rev.: G | Page: 1/1

Downloaded from Arrow.com.

A3