MICRO SWITCH
a Honeywell Division
FED. MFG. CODE 91929

SWITCH - ENCLOSED

CATALOG LISTING
LSQUC3K170

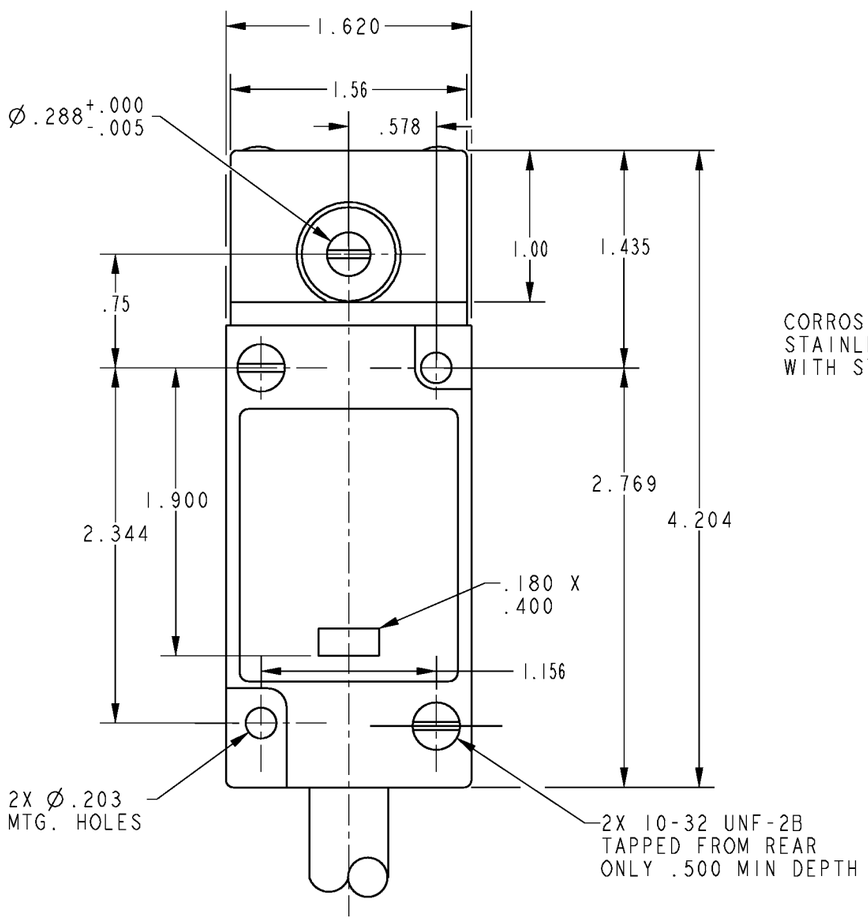

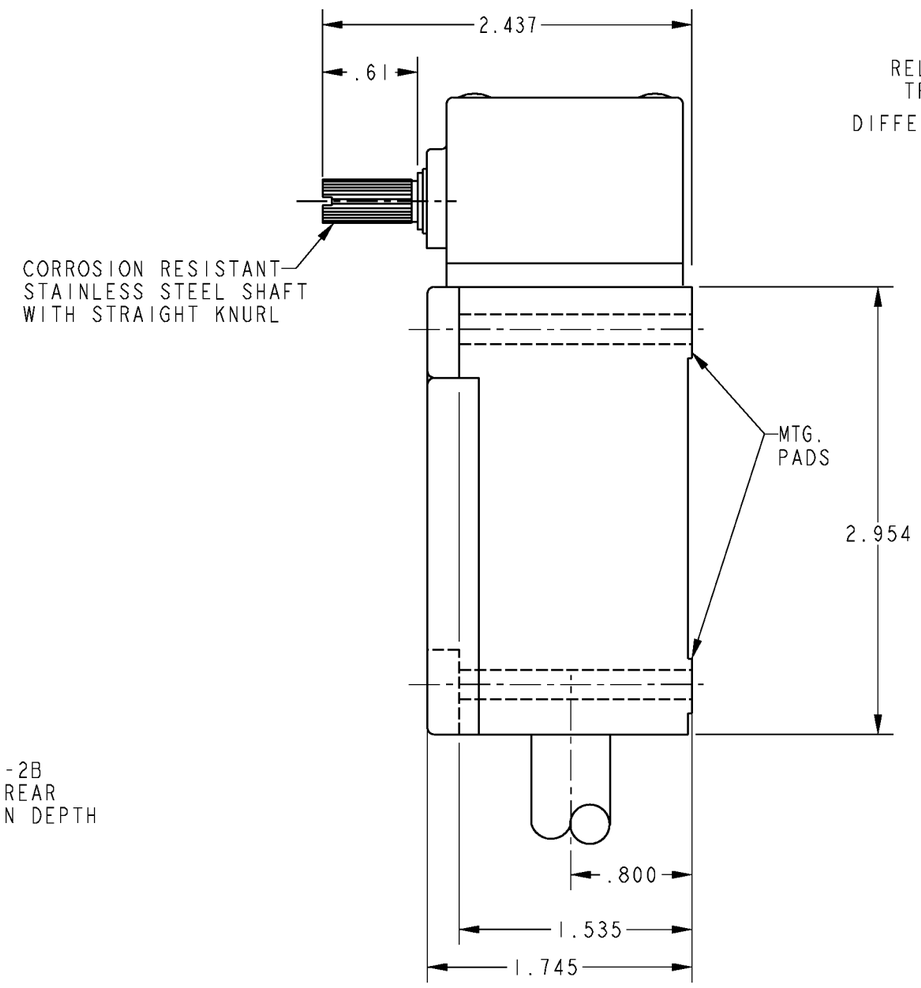

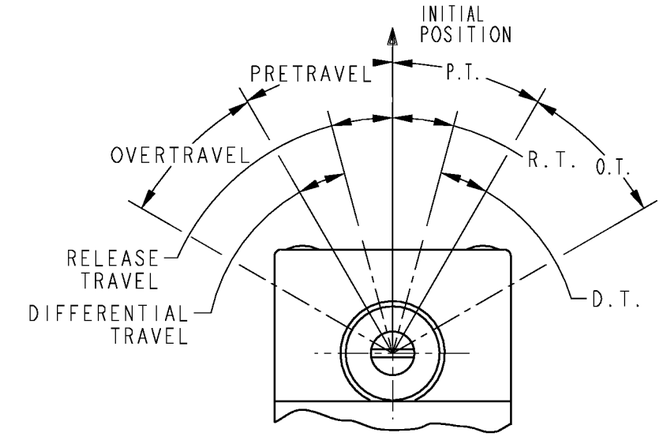

OPERATING DATA - SIDE ROTARY

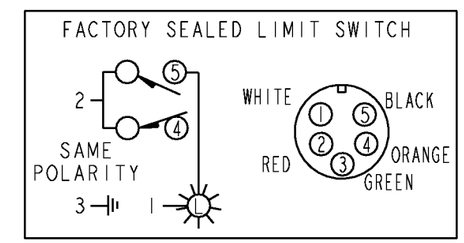

NOTE: NUMBERS ON THIS DIAGRAM REFER TO CONNECTOR PINS ONLY

NOTES
1 - 16 GAGE, TYPE STO, 5 CONDUCTOR CABLE
2 - BASIC SWITCH TERMINAL AREA AND CABLE EPOXY SEALED IN HOUSING

THIS DRAWING COVERS A PROPRIETARY ITEM AND IS THE PROPERTY OF MICRO SWITCH. A DIVISION OF HONEYWELL. THIS DRAWING IS NOT TO BE COPIED OR USED WITHOUT THE APPROVAL OF MICRO SWITCH

THIRD ANGLE PROJECTION

SCALE FULL

DO NOT SCALE PRINT

UNLESS OTHERWISE SPECIFIED TOLERANCES ARE

ONE PLACE	(.0)	±.030
TWO PLACE	(.00)	±.015
THREE PLACE	(.000)	±.005
ANGLES		±

WEIGHT

ANSI Y14.5M-1982 APPLIES

CHARACTERISTICS	
OPERATING TORQUE	4 IN LBS MAX
FULL TRAVEL TORQUE	4 IN LBS MAX
TOTAL TRAVEL	85° REF
PRETRAVEL	5° MAX
DIFFERENTIAL TRAVEL	3° MAX
OVERTRAVEL	80° MIN

ELECTRICAL DATA

CONTACT ARRANGEMENT
SPDT

LSQUC3K170 — CATALOG LISTING — PAGE 1 OF 1 — RELEASE NO. CO-81200 — REPLACES

ISSUE 2

REVISIONS
A CO-92473 GLH 8 JAN 98

DRAWN	GLH	10 APR 96	PTC/CAD
CHECK	SAV	20 MAY 96	
CHECK			
CHECK			

Downloaded from Arrow.com.