© 2023 TE Connectivity. All Rights Reserved.

REVISIONS					
P	LTR	DESCRIPTION	DATE	DWN	APVD
	A1	NEW DRAWING	05DEC2023	ASB	JDB
	K1	DRAWING RE-CREATED IN CREO	07DEC2023	NK	JDB

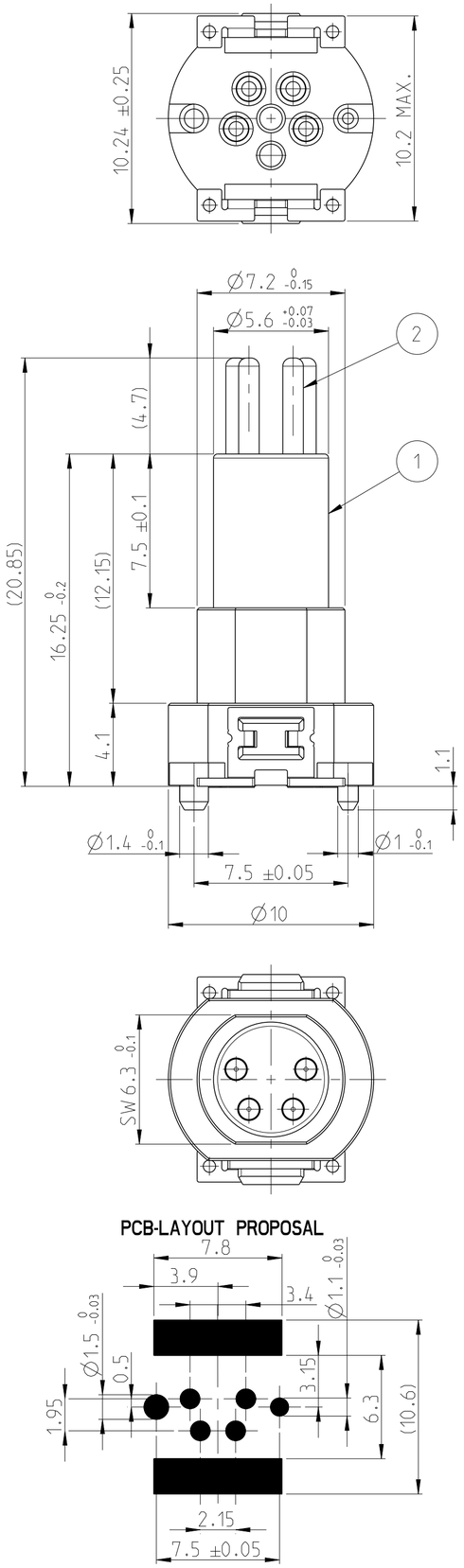

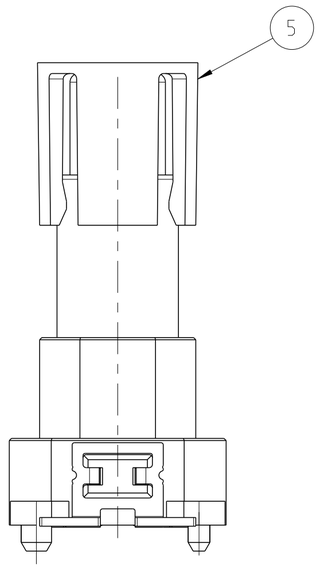

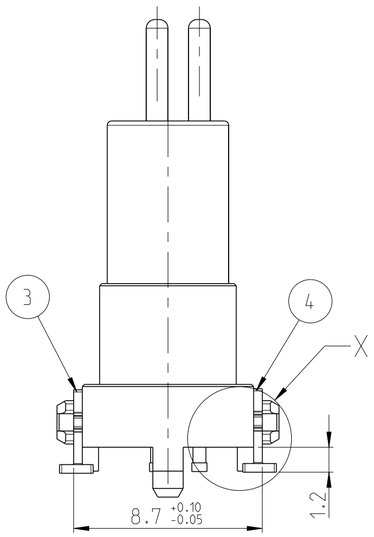

DETAIL X
SCALE 10:1

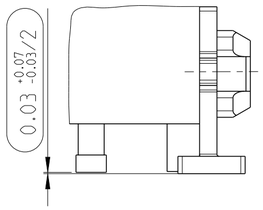

TAPE ON REEL PACKAGINGACCORDING TO DIN IEC 60286-3
PACKAGING UNIT: 80 PCS

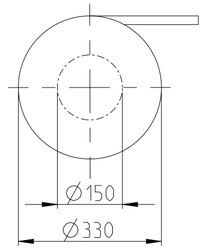

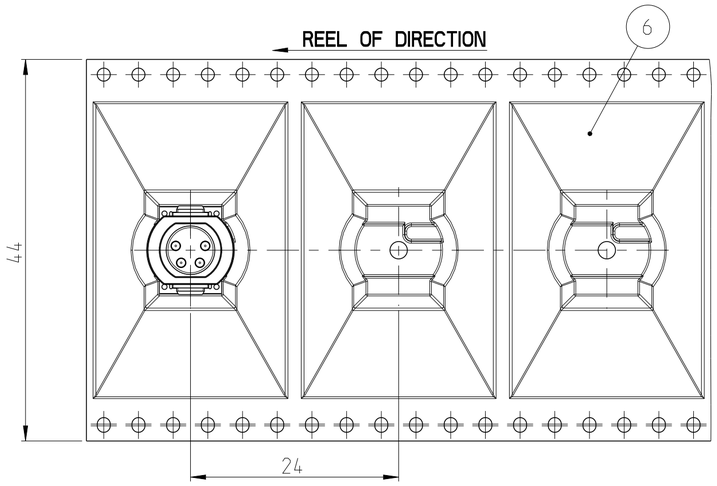

1. DRAWING SPECIFICATION ACCORDING TO 5_3_16-DOC-1806-00915
2. COPLANARITY AREA OF TERMINATION ≤ 0.1MM
3. PART; 100 PCS. IN BUBBLE BAGS/BULK

SCALE 2:1

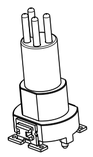

3D VIEW

3				
-	1	-	TAPE AND REEL	6
-	1	-	HOOD	5
1	1	-	SOLDER CLIP LEFT	4
1	1	-	SOLDER CLIP RIGHT	3
4	4	-	PINS	2
1	1	-	M8 HOUSING	1
234235-E	224152-E	REV	DESCRIPTION	ITEM NO.
-	-	REV OF EACH ASSY NO. (WHEN BLANK, USE DWG. REV)		
QTY		PARTS LIST		

V= TURNED CONTACT (PCB SIDE CAN BE USED WITH POTTING COMPOUND)

PCB-LAYOUT PROPOSAL

INSPECTION LEVEL 1: CONTROL CHART REQUIRED
(1) PROOF OF PROCESS CAPABILITY OR 100% TEST IF PROCESS CAPABILITY IS NOT ACHIEVED

INSPECTION LEVEL 2 AND 3: CONTROL CHART REQUIRED
(2) PROOF OF MEAN VALUE, STANDARD DEVIATION AND MACHINE CAPABILITY

(3) PROOF OF VALUES OR PROOF OF ATTRIBUTIVE TEST

INFORMATION ON THE SCOPE OF TESTING AND DETECTION BY ERNI VA 7.3.2.3

THIS DRAWING IS A CONTROLLED DOCUMENT.

DIMENSIONS: mm

TOLERANCES UNLESS OTHERWISE SPECIFIED: DIM. FOR INFORMATION ISO 8015
0 PLC ±
1 PLC ±
2 PLC ±
3 PLC ±
4 PLC ±
ANGLES ±

MATERIAL - -
FINISH -

DWN	B S ADRUSH	21AUG2023
CHK	M SZELAG	23AUG2023
APVD	J DE BRUIJN	23AUG2023
PRODUCT SPEC	108-94887	
APPLICATION SPEC	114-94781	
WEIGHT	-	

TE Connectivity

NAME
M8 CIRCUAR CONNECTOR
MALE CONNECTOR 4P 16.25 SMT V
-

SIZE	CAGE CODE	DRAWING NO	RESTRICTED TO
A2	00779	C-224152-E	-

CUSTOMER DRAWING | SCALE 5:1 | SHEET 1 OF 1 | REV K1

1471-9 (3/13)

Downloaded from Arrow.com.