Product No.	Dim"L1"	Dim"L2"	Dim"L3"	Dim"L4"	Dim"L5"	Dim"L6"	Dim"L7"	Connector"A"	Over mold "A"	Connector"B"	SATA Wire	Solder	Taping
10111728-15S260HLF	260±10	50±8	140±10				50±8	SATA 15P Receptacle connector Straight type Housing,Back Cover: Heat resistant resin, Halogen Free, UL94V-0, Color Black Contact: Copper Alloy Contact Area:Gold over Ni	Heat resistant resin, Halogen Free, UL94V-0, Color Black	EH 4P Connector (2.5mmP Wire/Board Connector) Maker:JST Part No.: Housing:EHR-4 Terminal:SEH-001 T-P0.6	XLPE Insulation Wire (UL3385 AWG22 VW-1 HF -F-) Color Black X2,Red,Yellow	Sn96.5-Ag3.0-Cu0.5 (Lead Free)	UL510 tape (Wide:10 X Length:30) Color Black Maker:Nitto Denko Product No.:No.223S
10111728-15S300HLF	300±10		90±10	100±8			30±8						

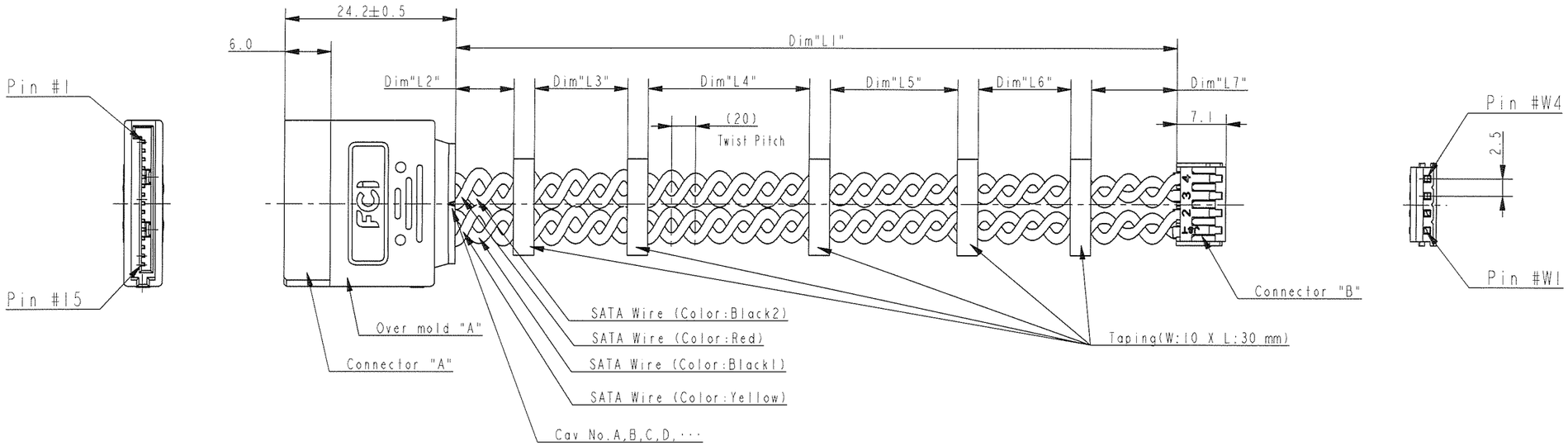

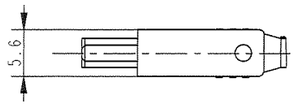

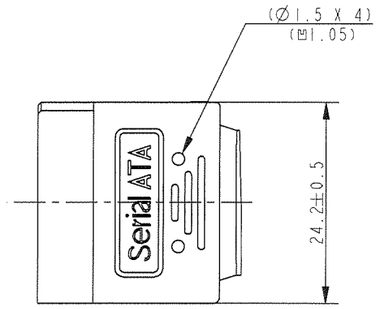

NOTE)

1)This product is based on Serial ATA Revision 2.6.
2)This product is manufactured by soldering process.
3)For Dim"L1", please inquire to sales person in our company.
4)Product SPEC:GS-12-672
5)Package SPEC:GS-14-1056
6)P/N composition

10111728 - 15 S XXX H LF

- LF: Lead Free
- H: Halogen Free
- XXX: Cable length:Dim "L1"
- S: SATA Side Type:(S:Straight,R:R/A)
- 15: Power connector position

Wiring Table:

Pin Assigment

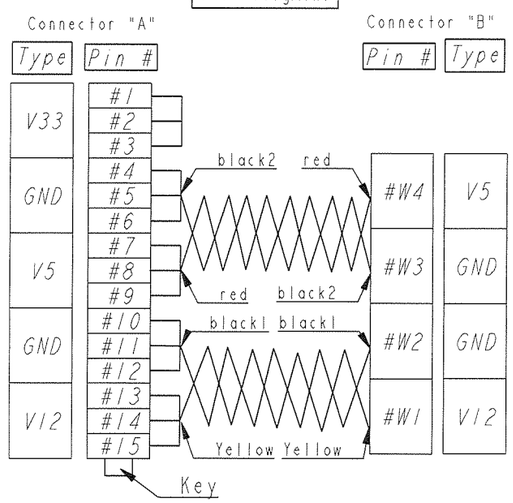

rev	ecn no	dr	date
A	J10-0210	T.I	2010-10-14
-	-	-	-
-	-	-	-
-	-	-	-
-	-	-	-
-	-	-	-
-	-	-	-

www.fciconnect.com

Dr	T. Ishishita	2010-10-14
Eng	T. Ishishita	2010-10-14
Chr	[illegible]	2010-10-14
Appr	[illegible]	2010-10-18

surface ISO 1302 ✓ | tolerance std ISO 406 ISO 1101 | projection | MM

TOLERANCES UNLESS OTHERWISE SPECIFIED

ANGULAR		LINEAR		
0°	±4°	0.X	±0.4	
		0.XX	±0.4	
		0.XXX	±0.4	

size A2 | Scale N/A

ECN J10-0210

Product family 233F | Spec ref

title: SATA 15P Power Cable Harness

SATA 15P Receptacle Straight Cable twist

dwg no 10111728 | Rev. A

catalog no | CUSTOMER | sheet 1 of 1

Copyright FCI.

Downloaded from Arrow.com.